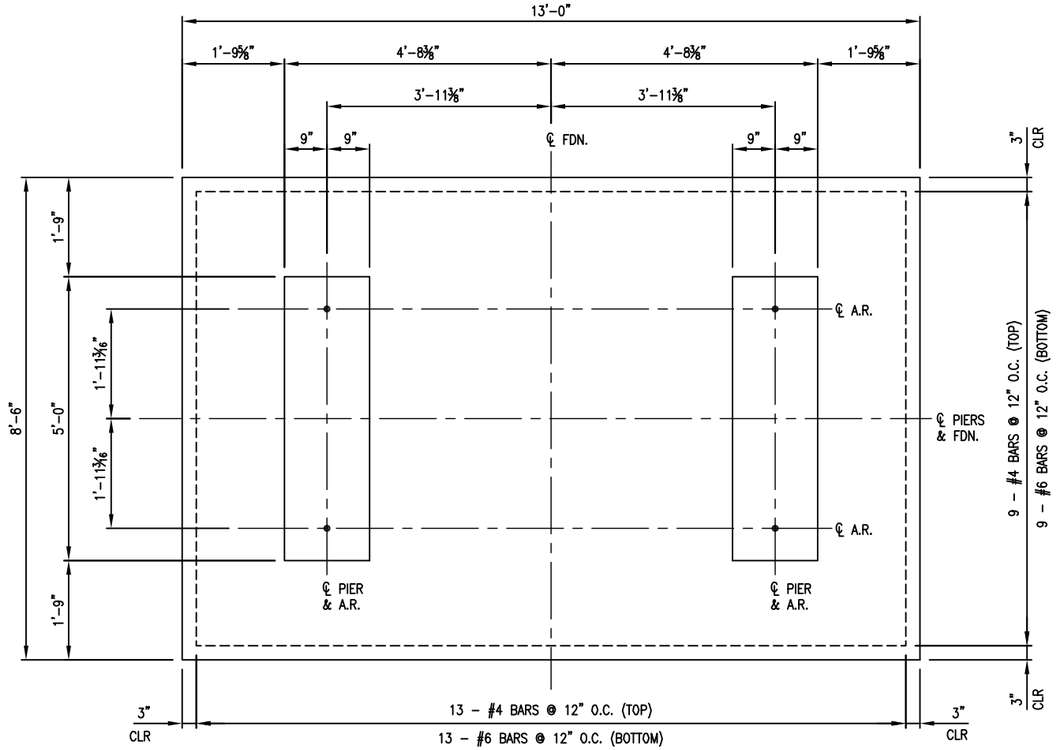

PLAN

SCALE: ⅜"=1'-0"

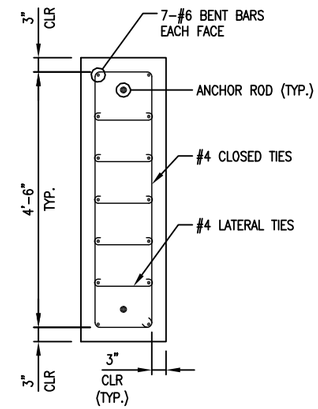

A THIS SH.

SECTION

SCALE: ⅜"=1'-0"

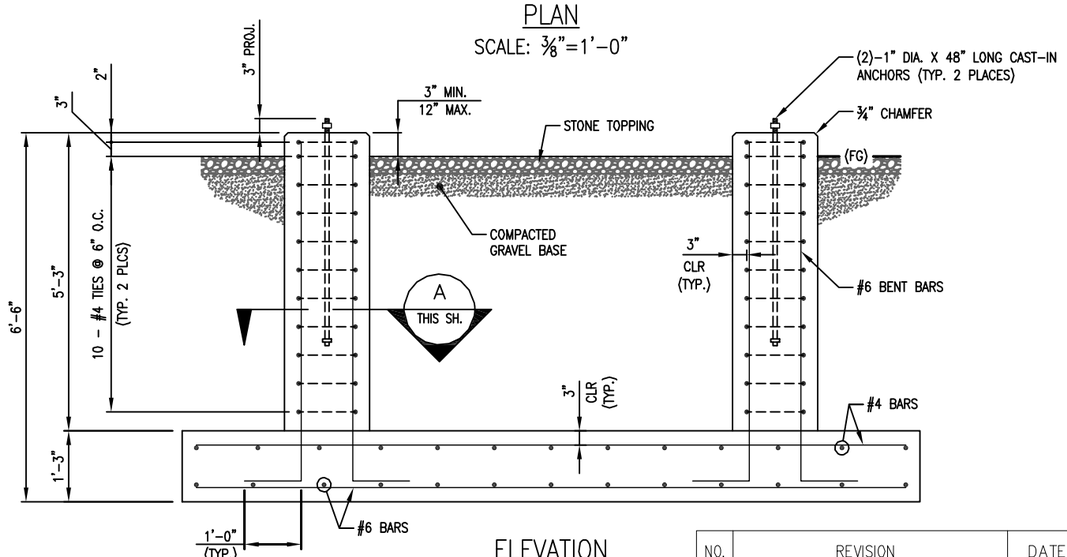

ELEVATION

SCALE: ⅜"=1'-0"

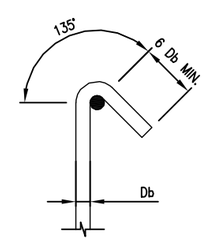

TIE HOOK DETAIL

SCALE: N.T.S.

DESIGN DATA

STRUCTURE

CLASSIFICATION (ASCE 7)	CATEGORY IV
SITE LOCATION	PORTLAND, MAINE
ALLOWABLE SOIL BEARING	4000 PSF
GROUND WATER ELEVATION	2 FT BFG

WIND LOADS

BASIC WIND SPEED	100 MPH
IMPORTANCE FACTOR	1.15
EXPOSURE CATEGORY	C

ATMOSPHERIC ICE LOADS

RADIAL ICE	1 INCH
CONCURRENT WIND SPEED	40 MPH

EARTHQUAKE LOADS

IMPORTANCE FACTOR	1.5
SITE CLASS	C
SEISMIC DESIGN CATEGORY	C

NOTES

1. CONCRETE COMPRESSIVE STRENGTH SHAL 28 DAYS.
2. REINFORCING SHALL BE ASTM A615 GR. YIELD).
3. ANCHOR RODS SHALL BE HOT-DIP GALVANIZED ASTM F1554 GR. 36 (36ksi YIELD), UNLESS NOTED OTHERWISE. HOOKED ANCHORS ARE NOT ACCEPTABLE.
4. ASTM A563 HEAVY HEX NUTS & F844 WASHERS SHALL BE HOT-DIP GALVANIZED, UNLESS NOTED OTHERWISE. A MINIMUM OF (2) NUTS AND (2) WASHERS PER ANCHOR ROD.
5. PROVIDE ¾" CHAMFER ON ALL EXPOSED EDGES, UNLESS NOTED OTHERWISE.
6. FOOTING SHALL BE PLACED ON BEDROCK OVERLAIN BY 12" OF ¾" CRUSHED STONE.
7. FOUNDATION TO BE BACKFILLED & COMPACTED IN ACCORDANCE WITH PROJECT SPECIFICATIONS AND TYPICAL DETAIL ON DWG 550-3-6.
8. ANY ESTIMATED 8.1 C.Y. OF CONCRETE IS REQUIRED FOR ONE FOUNDATION. ESTIMATED QUANTITY IS FOR OWNER'S ASSET MANAGEMENT PURPOSES ONLY. CONTRACTOR IS RESPONSIBLE FOR DETERMINING QUANTITIES REQUIRED FOR CONSTRUCTION AND BID PURPOSES.

LEGEND OF ABBREVIATIONS:

A.R.	-	ANCHOR ROD
CLR	-	CLEAR
DWG.	-	DRAWING
EQ	-	EQUAL/EQUALLY
FDN.	-	FOUNDATION
(FG)	-	FINISHED GRADE
O.C.	-	ON CENTER
PROJ	-	PROJECTIONS
BFG	-	BELOW FINISH GRADE
SP.	-	SPACING/SPACED
B.C.	-	BOLT CIRCLE
UNO	-	UNLESS NOTED OTHERWISE

Reviewed for Code Compliance
Inspections Division
Approved with Conditions
Date: 02/24/17

FOUNDATION MARK LL

This document and any attachments are considered:
BUSINESS CONFIDENTIAL
PROTECTED CRITICAL INFRASTRUCTURE INFORMATION

REFERENCE DRAWINGS	
520-3-11	SITE PLAN
520-37	FOUNDATION PLAN

NO.	REVISION	DATE	BY	CK	P. E. STAMPED BY	P. E. No.
0	ISSUED FOR CONSTRUCTION	08/15/16	SGC	SGC	BJB	12004

Professional Engineer Seal: STATE OF MAINE, BRIAN J. BEAULIEU, No. 12004, LICENSED PROFESSIONAL ENGINEER, 08/15/2016

DESIGNED SGC/TDD
DRAWN SGC/TDD
CHECKED SGC/TMH
APPROVED CMP
REVIEWED

FOUNDATION DETAIL
72.5kV IPO GAS CIRCUIT BREAKER
BISHOP ST. SUBSTATION

CENTRAL MAINE POWER COMPANY
SYSTEM ENGINEERING
CENTRAL MAINE POWER
DATE: 10/10/14
SCALE: AS NOTED

520-3-15
REV 0

NO.	REVISION	DATE	BY	CK

ENGINEERING CONSULTANT - LOGO - ADDRESS
SGC ENGINEERING, LLC
100 WATER ST.
HALLOWELL, ME 04347

THIS DRAWING SHALL BE REVISED ON THE CADD SYSTEM ONLY