SYMBOLS AND ABBREVIATIONS

AC	AIR CONDITIONING	LWB	LEAVING WET BULB
AD	ACCESS DOOR	MBH	THOUSAND BTU PER HOUR
AFF	ABOVE FINISH FLOOR	MD	MANUAL DAMPER
AH	AIR HANDLER	MOD	MOTOR OPERATED DAMPER
AP	ACCES PANEL	MUA	MAKEUP AIR
APD	AIR PRESSURE DROP	NG	NATURAL GAS
ATC	AUTOMATIC TEMP. CONTROL	NTS	NOT TO SCALE
CC	COMPRESSOR/CONDENSER	OA	OUTDOOR AIR
CD	CONDENSATE DRAIN	OD	OUTSIDE DIMENSION
CFH	CUBIC FEET PER HOUR	R	RETURN
CFM	CUBIC FEET PER MINUTE	RA	RETURN AIR
CTE	CONNECT TO EXISTING	RG	RETURN GRILLE
D	DRAIN	RIS	RUBBER-IN-SHEAR
DIC	DOWN IN CORNER/CHASE	RL	REFRIGERANT LIQUID
DIFF	DIFFUSER	RS	REFRIGERANT SUCTION
DX	DIRECT EXPANSION	RR	RETURN REGISTER
EAT	ENTERING AIR TEMPERATURE	S	SUPPLY
EC	ELECTRICAL CONTRACTOR	SA	SUPPLY AIR
ECC	EXISTING COMPRESSOR/CONDENSER	SC	SITE CONTRACTOR
ED	EXISTING DIFFUSER	SCG	SUPPLY CEILING GRILLE
EDB	ENTERING DRY BULB	SCR	SUPPLY CEILING REGISTER
EEF	EXISTING EXHAUST FAN	SD	SMOKE DAMPER
EF	EXHAUST FAN	SF	SUPPLY FAN
ER	EXHAUST REGISTER	SFM	SIGHT FLOW MONITOR
ERG	EXISTING RETURN GRILLE	SG	SUPPLY GRILLE
ESP	EXTERNAL STATIC PRESSURE	SP	STATIC PRESSURE
EWB	ENTERING WET BULB	SR	SUPPLY REGISTER
FC	FLEXIBLE CONNECTOR	T	THERMOMETER
FV	FACE VELOCITY	TC	TEMPERATURE CONTROL
GC	GENERAL CONTRACTOR	TCP	TEMPERATURE CONTROL PANEL
HC	HEATING CONTRACTOR	TSP	TOTAL STATIC PRESSURE
H&V	HEATING & VENTILATING	T'STAT	THERMOSTAT
HVAC	HEATING, VENTILATING AND AIR CONDITIONING	TV	TURNING VANE
		UC	UNDERCUT
LAT	LEAVING AIR TEMPERATURE	UIC	UP IN CHASE
LDB	LEAVING DRY BULB	VI	VIBRATION ISOLATOR

L	REFRIGERANT LIQUID PIPING
S	REFRIGERANT SUCTION PIPING
(S)	TEMPERATURE SENSOR
(T)	THERMOSTAT
(T)	THERMOSTAT WITH GUARD
	MANUAL DAMPER
	FLEXIBLE DUCT
	LAY-IN DIFFUSER
	SURFACE MOUNT DIFFUSER
	SUPPLY AIR DUCT
	RETURN / RELIEF AIR DUCT

EXISTING COMPRESSOR/CONDENSER UNITS

TAG	EQUIPMENT SERVED	MANUFACTURER	NOMINAL BTU	POWER	REFRIGERANT	REMARKS
ECC-1	AHU-1	TEMPSTAR	42,000	208V-60-3Ø	R-22	REMOVE ENTIRELY
ECC-2	AHU-2	YORK	36,000	208V-60-3Ø	R-22	REPLACE UNDER ALTERNATE #1
ECC-3	AHU-3	YORK	36,000	208V-60-3Ø	R-22	REPLACE UNDER ALTERNATE #1
ECC-4	AHU-4	YORK	60,000	208V-60-3Ø	R-22	REPLACE UNDER ALTERNATE #1
ECC-5	DUCT DX COIL #1	GOODMAN	48,000	208V-60-1Ø	R-22	REPLACE UNDER ALTERNATE #1
ECC-6	DUCT DX COIL #2	TEMPSTAR	48,000	208V-60-1Ø	R-22	REPLACE UNDER ALTERNATE #1

AIR TERMINAL SCHEDULE

TAG	SIZE	MAX CFM	MAX NC	MAX SP	REMARKS
ED1	12"Ø	430	-----	-----	EXISTING DIRECTIONAL DIFFUSER
ED2	8"Ø	560	-----	-----	EXISTING DIRECTIONAL DIFFUSER
D1	6"Ø	165	20	0.072"	SQUARE DIFFUSER / 24x24 LAY-IN PANEL
D2	8"Ø	275	20	0.072"	SQUARE DIFFUSER / 24x24 LAY-IN PANEL
ERG1	14"x10"	210	-----	-----	EXISTING RETURN GRILLE
ERG2	22"x22"	500	-----	-----	EXISTING RETURN GRILLE
RG1	24"x16"	1,230	20	0.051"	RETURN GRILLE WITH LAY-IN FRAME
RR1	6" x 4"	90	20	0.100"	RETURN REGISTER
RR2	6" x 6"	130	20	0.100"	RETURN REGISTER
RR3	12"x12"	555	22	0.073"	RETURN REGISTER
SR1	6" x 4"	85	20	0.090"	DOUBLE DEFLECTION SUPPLY REGISTER
SR2	6" x 6"	130	20	0.080"	DOUBLE DEFLECTION SUPPLY REGISTER

MAXIMUM NC LEVELS ON DIFFUSERS ARE FOR HORIZONTAL THROW

AIR HANDLING UNIT SCHEDULE

TAG	AREA SERVED	SUPPLY FAN				ELECTRIC				GAS FURNACE					DIRECT EXPANSION COOLING COIL							MIN. O.A.	WEIGHT (LBS)	REMARKS
		CFM	ESP	RPM	BHP	POWER	SYSTEM KW	MCA	MOP	FUEL	MBH IN	MBH OUT	EAT	LAT	MAX FV	EDB	EWB	SENS.	TOTAL	LDB	LWB			
AH-1	KITCHEN 129 & DINING 130	1,200	0.75"	992	0.48	208V-60-3Ø	3.13	28.3	45.0	NAT. GAS	60	48	55	92.3	N/A	80	67	26.49	37.02	59.9	57.17	10.0%	770	ROOFTOP, DOWNFLOW

AH-2, AH-3 AND AH-4 ARE EXISTING TO REMAIN

WEIGHT DOES NOT INCLUDE CURB

MAKEUP AIR UNIT

TAG	AREA SERVED	SUPPLY FAN				ELECTRIC		GAS FURNACE					MIN. O.A.	WEIGHT (LBS)	REMARKS
		CFM	ESP	RPM	HP	POWER	FLA	FUEL	BTU IN	BTU OUT	EAT	LAT			
MUA	KITCHEN COOKING HOOD	2,090	0.35"	1,024	1.1/2	208V-60-3Ø	4.4	NAT. GAS	174,197	160,261	0°	71°	100%	704	ROOFTOP, DOWNFLOW

NEW COMPRESSOR/CONDENSER UNITS

TAG	EQUIPMENT SERVED	NOMINAL BTU	AMBIENT	POWER			MIN. EER	REFRIGERANT	TUBING		WEIGHT	REMARKS
				VOLTAGE	MCA	MOP			LIQ.	GAS		
CC-2	AHU-2	36,000	95°	208V-60-1Ø	18.0	30.0	13.0	R410A	3/8"	7/8"	246	PROVIDE UNDER ALTERNATE #1
CC-3	AHU-3	36,000	95°	208V-60-1Ø	18.0	30.0	13.0	R410A	3/8"	7/8"	246	PROVIDE UNDER ALTERNATE #1
CC-4	AHU-4	60,000	95°	208V-60-1Ø	32.0	50.0	12.5	R410A	3/8"	1.1/8"	327	PROVIDE UNDER ALTERNATE #1
CC-5	DUCT DX COIL #1	48,000	95°	208V-60-1Ø	26.0	40.0	13.0	R410A	3/8"	7/8"	322	PROVIDE UNDER ALTERNATE #1
CC-6	DUCT DX COIL #2	48,000	95°	208V-60-1Ø	26.0	40.0	13.0	R410A	3/8"	7/8"	322	PROVIDE UNDER ALTERNATE #1

FAN SCHEDULE

TAG	AREA SERVED	TYPE	CFM	SP	SONES	RPM	WATTS	HP	ELECTRIC	WEIGHT	REMARKS
EF-1	COOKING HOOD	ROOF UPBLAST	2,322	7/8"	11.6	1,007	- - - - -	1	208V-60-3Ø	188	OPERATE FROM SEPARATE SWITCH
EF-2	DISHWASH HOOD	ROOF UPBLAST	700	1/4"	6.2	1,084	- - - - -	1/4	208V-60-3Ø	105	OPERATE FROM SEPARATE SWITCH
EEF-3	117 MEN	CELING	110	1/10"	0.7	N/A	48	- - - - -	120V-60-1Ø	13	WITH HUMIDITY SENSOR & DELAY
EEF-4	119 MEN	CELING	110	1/10"	0.7	N/A	48	- - - - -	120V-60-1Ø	13	WITH HUMIDITY SENSOR & DELAY
EEF-5	116 WOMEN	CELING	110	1/10"	0.7	N/A	48	- - - - -	120V-60-1Ø	13	WITH HUMIDITY SENSOR & DELAY
EEF-6	118 WOMEN	CELING	110	1/10"	0.7	N/A	48	- - - - -	120V-60-1Ø	13	WITH HUMIDITY SENSOR & DELAY
EEF-7	121 HOUSE STOR.	CELING	110	1/10"	0.7	N/A	48	- - - - -	120V-60-1Ø	13	WITH HUMIDITY SENSOR & DELAY
EF-8	115 MEN	CELING	110	1/10"	0.7	N/A	48	- - - - -	120V-60-1Ø	13	WITH HUMIDITY SENSOR & DELAY
EF-9	122 STAFF TOILET	CELING	110	1/10"	0.7	N/A	48	- - - - -	120V-60-1Ø	13	WITH HUMIDITY SENSOR & DELAY

SONE RATINGS ARE MINIMUMS NOT TO BE EXCEEDED

WEIGHTS DO NOT INCLUDE CURBS

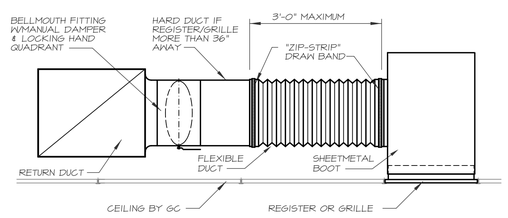

1 FLEXIBLE DUCT & REGISTER OR GRILLE CONNECTION DETAIL

NO SCALE

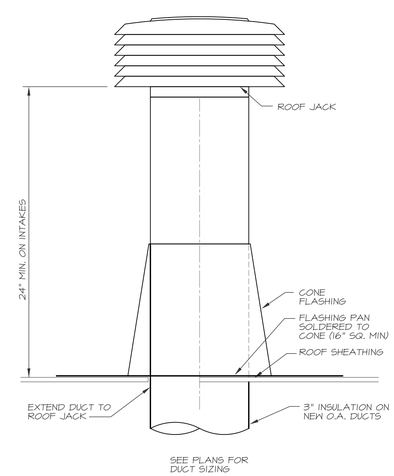

2 ROOF JACK

NO SCALE

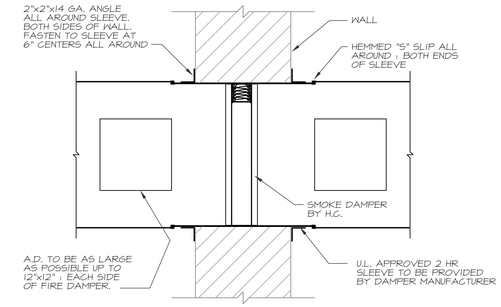

NOTE: SEE PLANS FOR DUCT AND DAMPER SIZING.

3 WALL SMOKE DAMPER STYLE"A"

NO SCALE

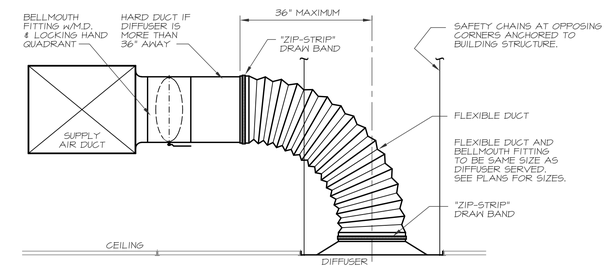

4 FLEXIBLE DUCT & DIFFUSER CONNECTION DETAIL

NO SCALE

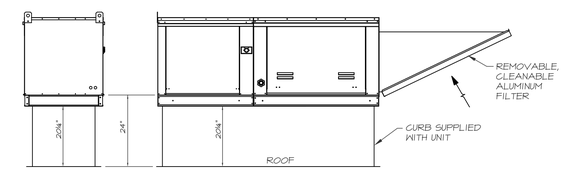

5 ROOFTOP MAKEUP AIR UNIT

NO SCALE

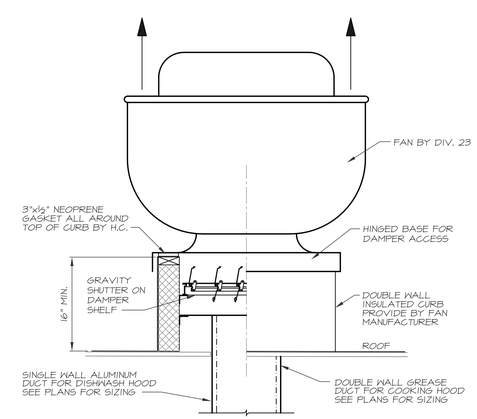

6 EXHAUST FANS 1 & 2

NO SCALE

MECHANICAL SYSTEMS ENGINEERS
ROYAL RIVER CENTER, UNIT 10B
10 FOREST FALLS DRIVE, YARMOUTH, MAINE 04096
(207) 846-1441
FACEBOOK: MECHANICAL SYSTEMS ENGINEERS
Project #1733

© COPYRIGHT 2017

17 BISHOP STREET

PORTLAND, MAINE

17 BISHOP STREET

STATE OF MAINE
Kurt F. Magnusson 10257
LICENSED PROFESSIONAL ENGINEER

WHIPPLE CALLENDER ARCHITECTS
136 PLEASANT AVE.
PORTLAND, ME 04103
P 207.775.2696
F 207.775.3631
www.whipplecallender.com

MARK	DATE	DESCRIPTION
	1/15/16	FOR CONSTRUCTION

DATE: 12/20/17

CHECKED BY: K.F.M.

DRAWN BY: R.E.M.

JOB: 2017-BISHOP

SHEET TITLE: MECHANICAL DETAILS & SCHEDULES

M3

December 18, 2017 – 11:49 am
X:\Projects\1733 17 Bishop Street\Drawings\1733-M3.dwg