EXHAUST HOOD GENERAL NOTES-

1. DUCT CONNECTIONS TO CONFORM TO REQUIREMENTS OF NFPA 96-7.5.5 DUCT CONNECTIONS
2. FIELD VERIFY EXHAUST OUTLET PLANE IF 10' MIN. FROM WINDOWS OR OTHER OPENINGS.
3. VERIFY EXISTING HOOD LIGHTING IS IN COMPLETE WORKING ORDER.
4. VERIFY EXISTING HOOD IS FULLY FUNCTIONAING FIRE SUPPRESSION HOOD PER NFPA 96/ CHAPTER 10.
5. ST. STEEL CONSTRUCTION TO BE .043" GAGE PER NFPA 96 CHAPTER 5.

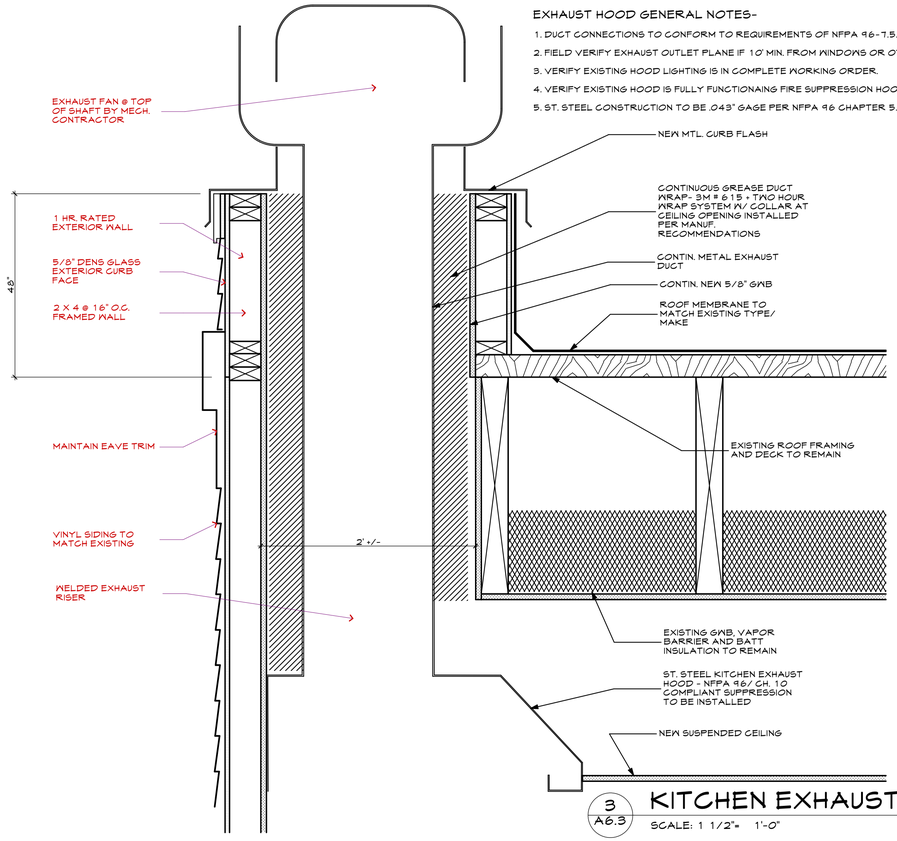

3 A6.3 KITCHEN EXHAUST DETAIL

SCALE: 1 1/2"= 1'-0"

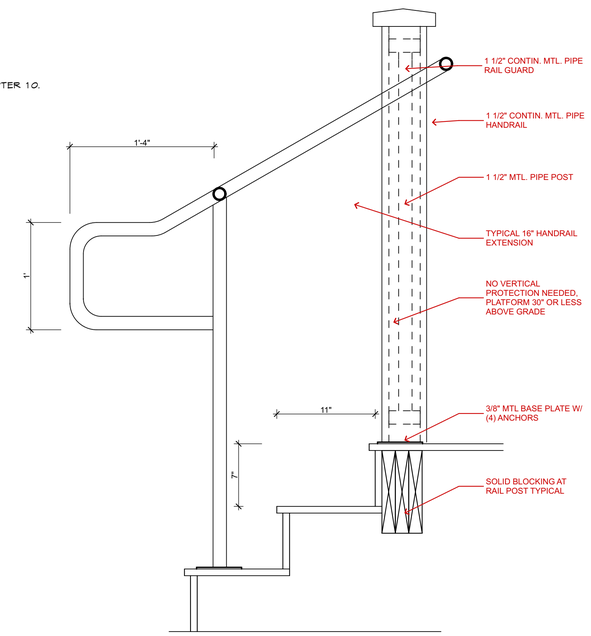

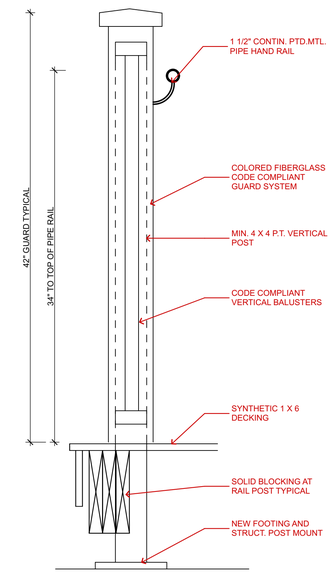

2 A6.3 EXTERIOR STAIR DETAIL

SCALE: 1 1/2"= 1'-0"

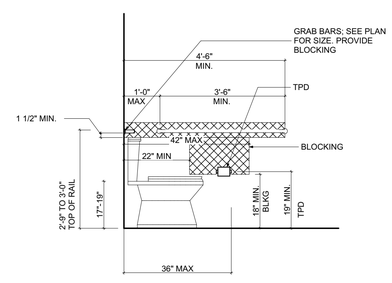

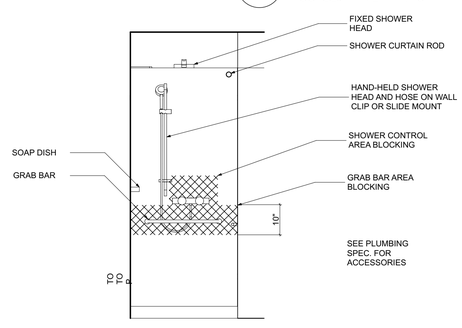

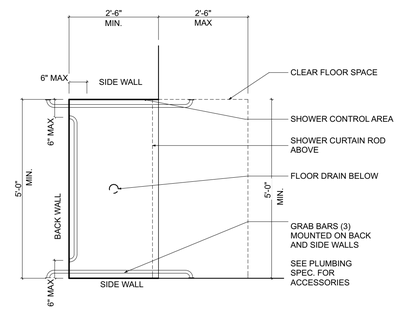

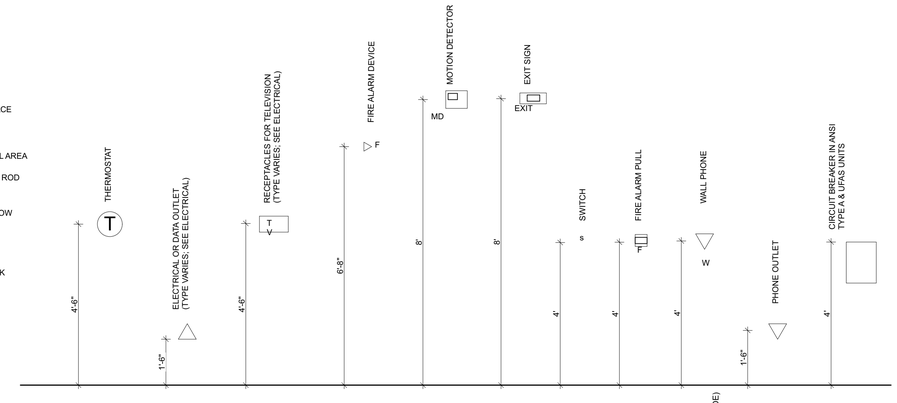

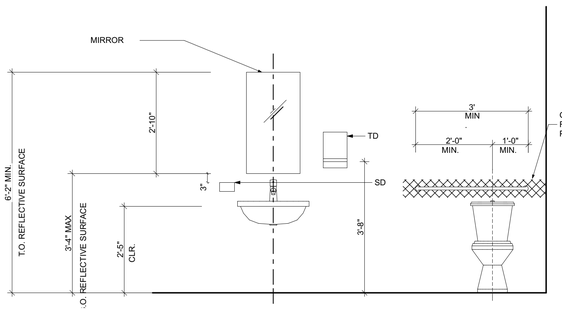

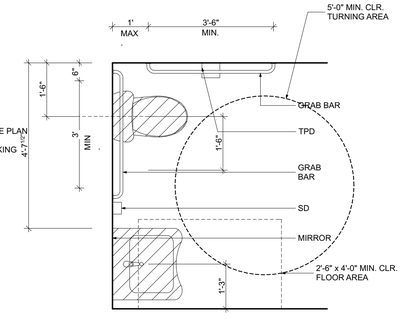

1 A6.3 ADA TYPICAL DETAILS

SCALE: 1 1/2"= 1'-0"

THIS DRAWING IS AN INSTRUMENT OF SERVICE AND SHALL REMAIN THE PROPERTY OF WHIPPLE CALLENDER ARCHITECTS. IT SHALL NOT BE USED FOR ANY OTHER PURPOSE THAT FOR WHICH IT IS SPECIFICALLY FURNISHED

PINETREE RECOVERY

17 BISHOP STREET PORTLAND, MAINE 04103

WHIPPLE CALLENDER ARCHITECTS

136 PLEASANT AVE.
PORTLAND, ME 04103
P 207.775.2696
F 207.775.3631
www.whipplecallender.com

MARK	DATE	DESCRIPTION

DATE: 1/3/18

CHECKED BY: JAD

DRAWN BY: CJC

JOB: 2017-BISHOP

SHEET TITLE: DETAILS

A6.3