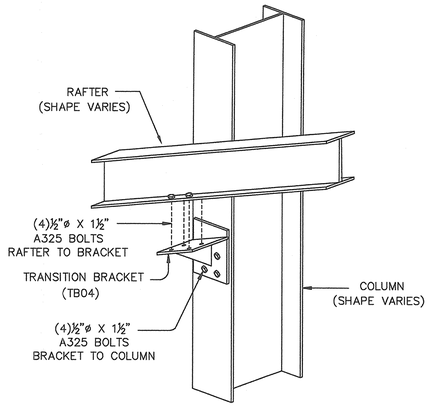

PF360

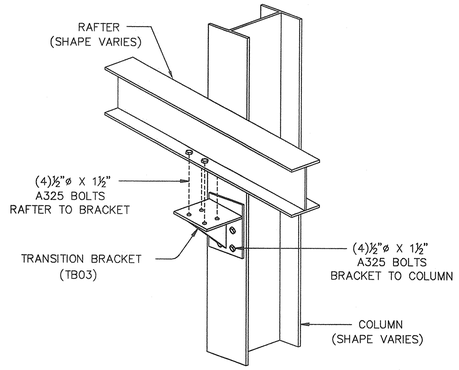

PF359

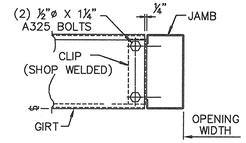

F0220

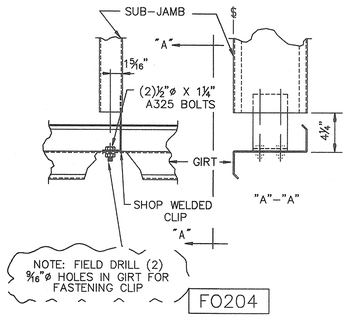

F0204

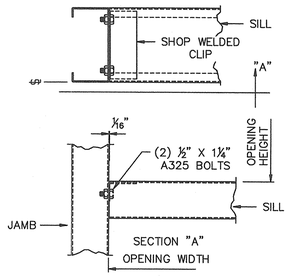

F0222

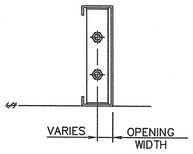

F0201

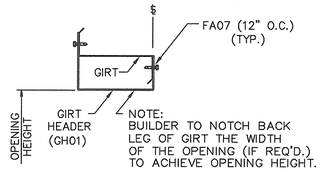

F0205

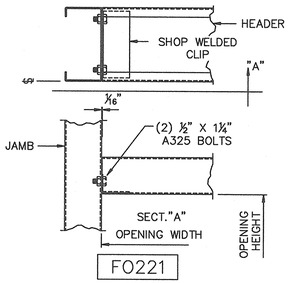

F0221

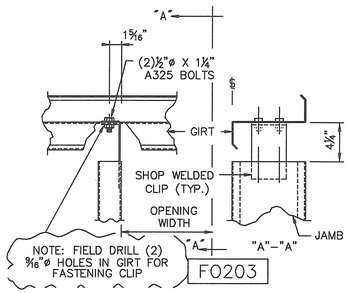

F0203

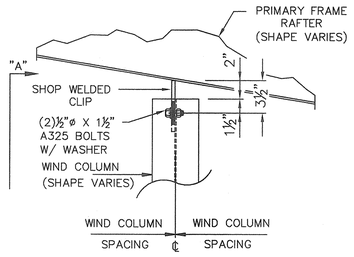

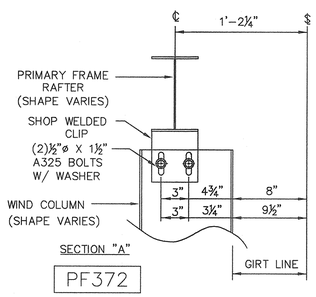

PF372

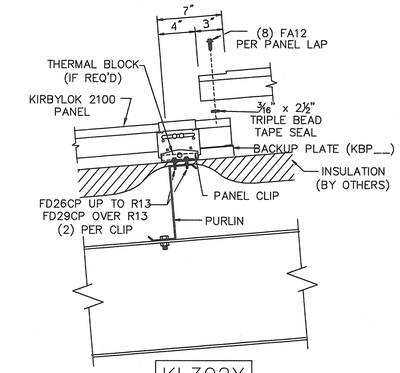

KL302X

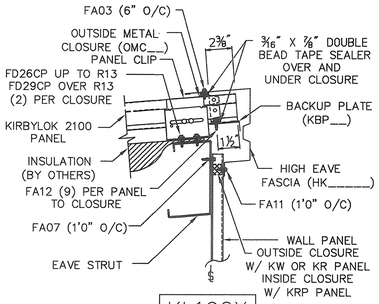

KL190X

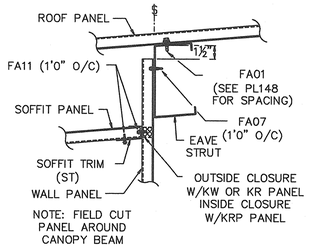

PL114

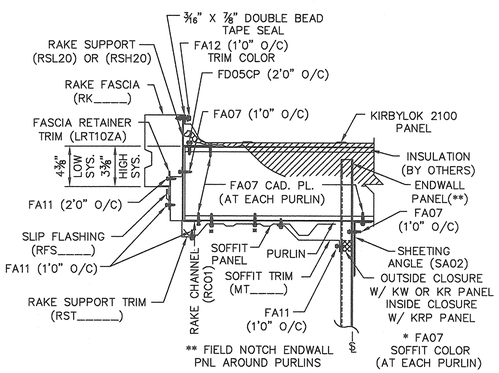

KL220X

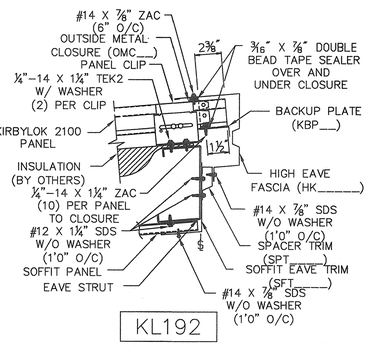

KL192

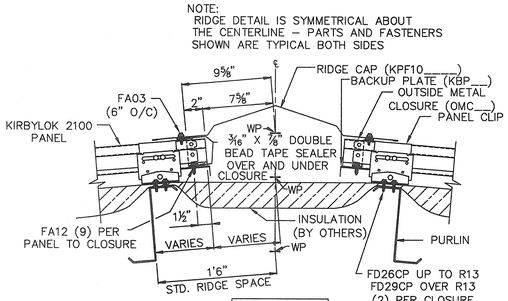

KL300X

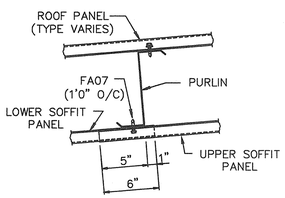

PL119

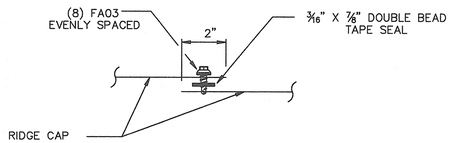

KL301X

1/7/14

CERTIFICATION EXTENDS ONLY FOR THE LOADS SPECIFIED ON KIRBY'S PURCHASE ORDER AS APPLIED TO THE STRUCTURAL COMPONENTS OF THE BUILDING DESIGNED AND SUPPLIED BY KIRBY BUILDING SYSTEMS, IF ERECTED AS INDICATED. NOTE THAT KIRBY'S ENGINEER IS NOT ACTING AS THE ENGINEER OF RECORD FOR THIS CONSTRUCTION PROJECT.

ISSUE	DESCRIPTION	BY	DATE
A	APPROVAL	JLA	12-23-13

Kirby Building Systems
A NUCOR Company

KIRBY BUILDING SYSTEMS ○ 124 KIRBY DRIVE ○ PORTLAND, TN 37148

TITLE: ERECTION DETAILS	DRN.BY:
BUILDER: FLYNN CONSTRUCTION	DATE:
CUSTOMER: EVOLUTION ROCK	CKD.BY:
LOCATION: PORTLAND, ME	DATE:
ID NUMBER: K13B0648MBR1 MBS	JOB NO: K13B0648A
	DWG.NO: D2 OF: 3