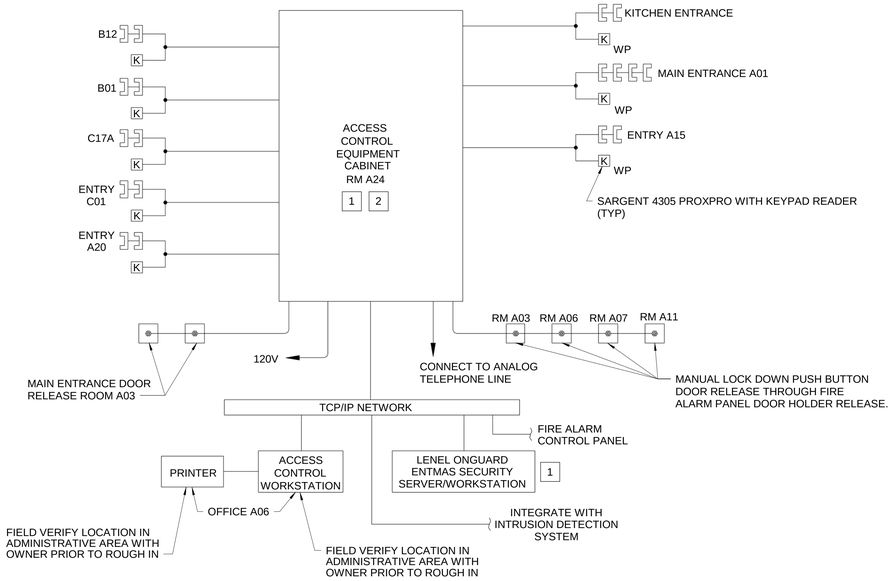

1 ACCESS CONTROL SYSTEM

ET502 SCALE: NOT TO SCALE

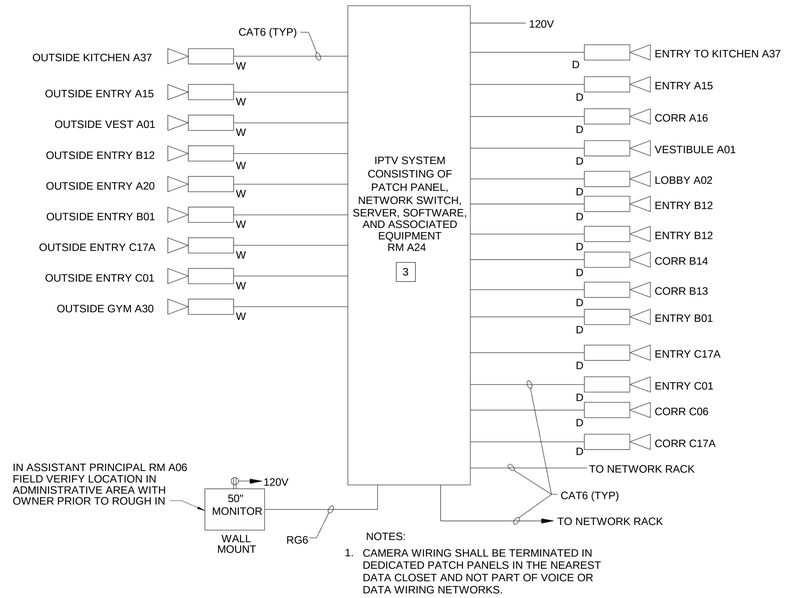

NOTES:

1. CAMERA WIRING SHALL BE TERMINATED IN DEDICATED PATCH PANELS IN THE NEAREST DATA CLOSET AND NOT PART OF VOICE OR DATA WIRING NETWORKS.

2 IP CAMERA SYSTEM

ET502 SCALE: NOT TO SCALE

DRAWING KEYNOTES

1. PROVIDE THE LENEL UNITED TECHNOLOGIES ONGUARD ENTERPRISE SYSTEM.
2. PROVIDE CONTROL MODULES COMPATIBLE WITH THE LENEL UNITED TECHNOLOGIES ONGUARD ENTERPRISE SYSTEM.
3. INTEGRATE VIDEO MANAGEMENT SYSTEM WITH LENEL ONGUARD ACCESS CONTROL SYSTEM.

DRAWING NOTES

1. THESE DRAWINGS ARE A GENERAL SYSTEM OVERVIEW INTENDED TO CONVEY DESIGN INTENT. SUBSEQUENTLY, NOT ALL HARDWARE IS SHWON IN THE DIAGRAM. THE INSTALLED SYSTEM SHALL ADHERE TO PROPOSED MANUFACTURER'S SYSTEM REQUIREMENTS AND SPECIFICATIONS.
2. REFER TO DRAWING EP101 AND EP102 FOR LOCATIONS OF POWER ASSIST DOOR OPERATORS AND 120V LOCK POWER.
3. UNDER SLAB CONDUITS SHALL BE ROUTED IN A MANNER TO ENSURE THE LEAST NUMBER OF CONDUIT BENDS POSSIBLE.
4. PROVIDE AND SIZE COMMUNICATIONS PATHWAYS FOR QUANTITY OF CABLES. COORDINATE WITH ARCHITECTURAL , STRUCTURAL, AND MECHANICAL TRADES.

ACCESS AND VIDEO LEGEND SURVEILLANCE LEGEND

K	COMBINATION KEY PAD AND CARD READER (SARGENT 4305 PROXPRO WITH KEYPAD READER)
	PUSH BUTTON
	ELECTRIC LOCK/STRIKE
	CAMERA D = DOME W = WALL MOUNT
	MAGNETIC SWITCH
	MOTION DETECTOR
S WP	WEATHERPROOF EXTERIOR SPEAKER

NOTE: REFER TO DRAWING E001 FOR COMPLETE SYMBOL LEGEND

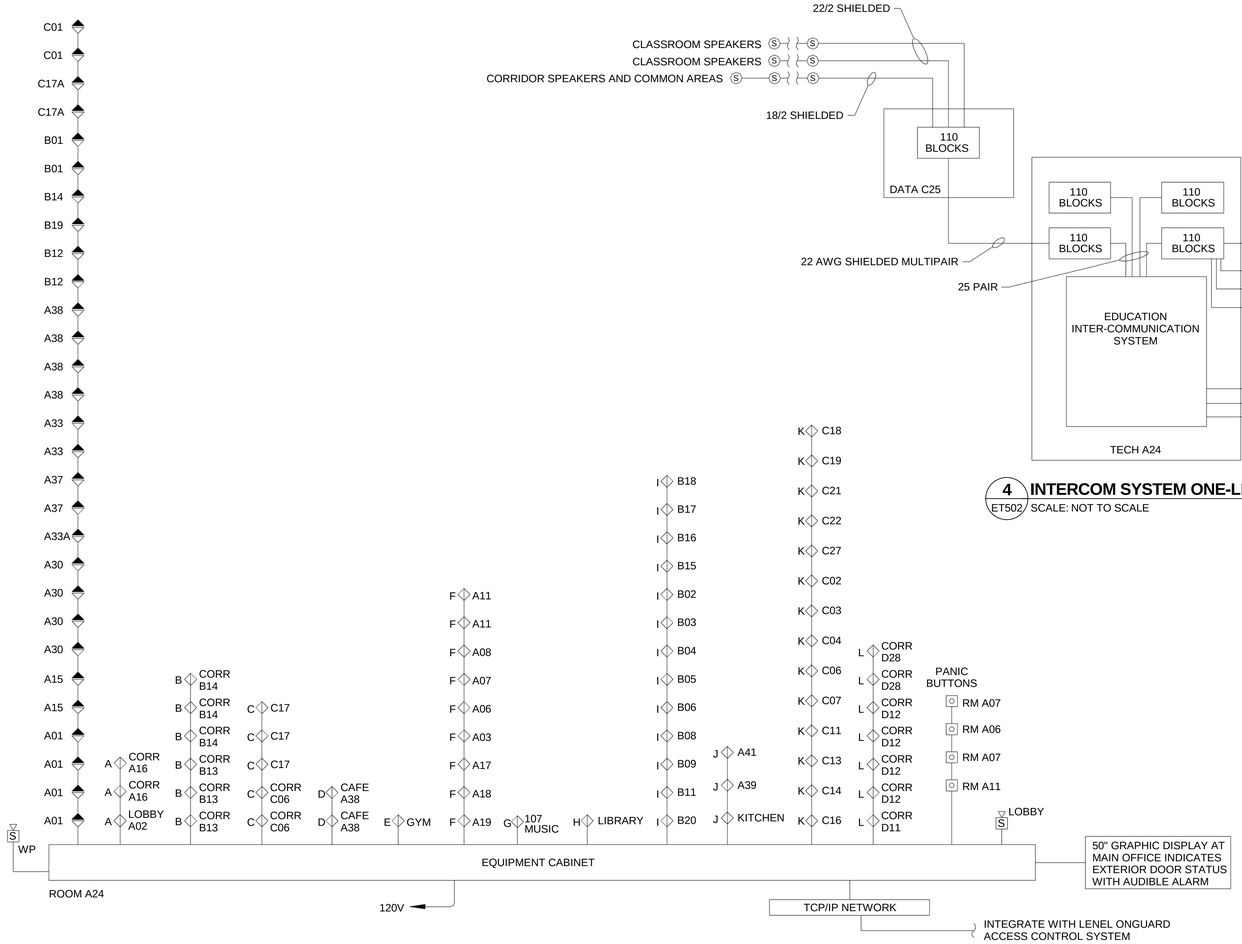

3 INTRUSION DETECTION

ET502 SCALE: NOT TO SCALE

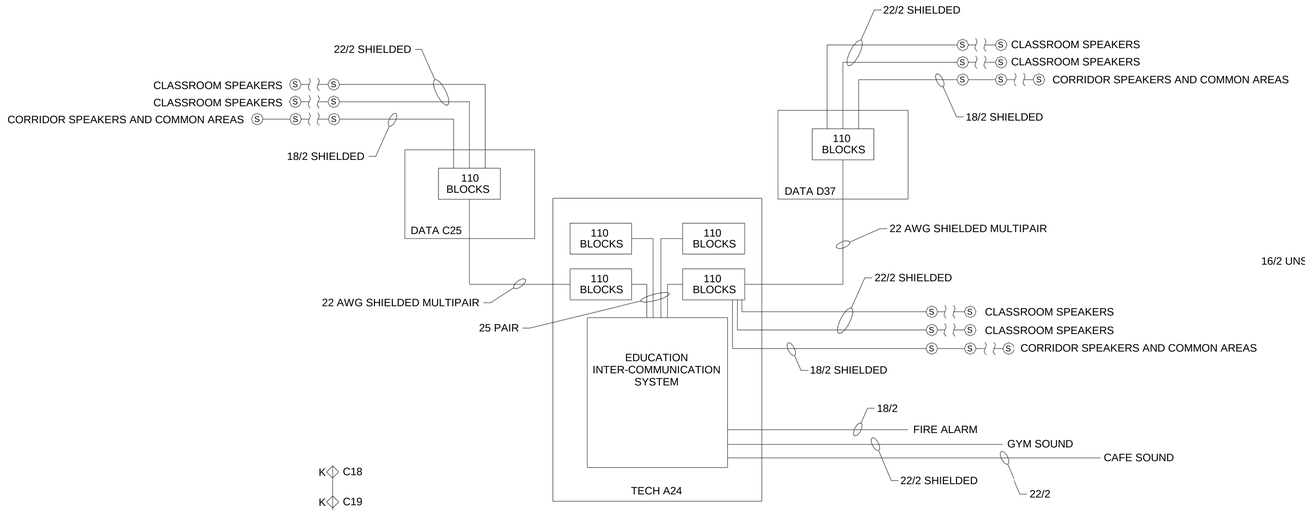

4 INTERCOM SYSTEM ONE-LINE DIAGRAM

ET502 SCALE: NOT TO SCALE

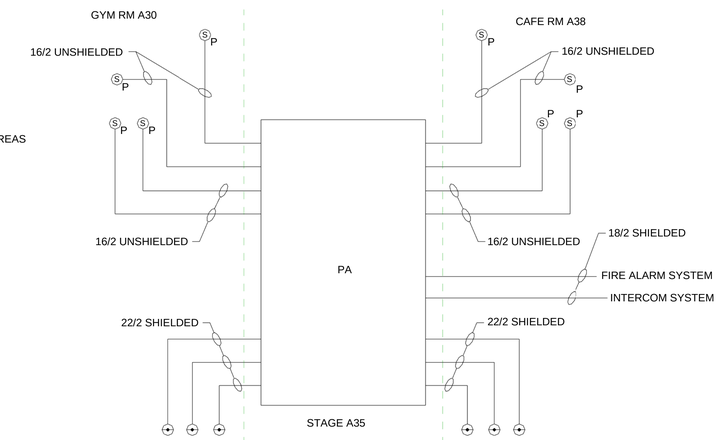

DIAGRAM NOTE:

1. PROVIDE CONDUIT FOR CABLES. SIZE PER NEC. MINIMUM SIZE SHALL BE 1/2".

5 GYM / CAFETERIA PA SYSTEM ONE-LINE DIAGRAM

ET502 SCALE: NOT TO SCALE

NO.	DATE	DESCRIPTION	BY

REVISIONS

STATE OF MAINE — DALE C. LINCOLN, II — No. 10443 — LICENSED PROFESSIONAL ENGINEER — 3-17-17

DRAWN BY: BPD
CHECK BY: DCL
DATE 03/17/17

STATE OF MAINE
PUBLIC SCHOOL PROJECT

TITLE: PORTLAND PUBLIC SCHOOLS
NEW FRED P. HALL ELEMENTARY SCHOOL

LOCATION: 23 ORONO ROAD, PORTLAND, ME

TITLE THIS DWG: TECHNOLOGY DETAILS

OAK POINT ASSOCIATES
ARCHITECTURE ■ ENGINEERING ■ PLANNING
231 Main Street, Biddeford, Maine 04005 207.283.0193

DRAWING NO. ET502

SHEET NO. 307 OF 312

3/20/2017 5:05:31 PM
C:\Users\DPA\Documents\21602.08_HALL SCHOOL_ELECTRICAL_V17_DPA.rvt