T:\TechService\2013\Design Services\13262 Jerrier Residence\13262F\Uponor Drawing & Calcs\13262F Jerrier Residence.dwg 04/09/13 - 3:12 pm

AquaSAFE™ GENERAL NOTES:

1. THIS SYSTEM IS DESIGNED AS PER NFPA 13D 2010 EDITION AS A RESIDENTIAL MULTIPURPOSE SYSTEM. SECTION 3.3.9.3

2. UPONOR COMPANY RESERVES THE EXCLUSIVE RIGHTS TO ALL DETAILS AND DRAWINGS AS SHOWN ON THIS SHEET. THESE DETAILS AND DRAWINGS ARE PROPRIETARY INFORMATION OF UPONOR COMPANY AND UNAUTHORIZED USE MAY BE SUBJECT TO PROSECUTION TO THE FULL EXTENT OF THE LAW.

3. THE DESIGN OF THIS SYSTEM IS DICTATED BY SPECIFIC CEILING HEIGHTS AND ROOM SIZES. IT IS THE RESPONSIBILITY OF THE INSTALLING CONTRACTOR TO ENSURE THAT THE CONDITIONS SHOWN ON THESE PLANS ARE EXACTLY AS THEY EXIST IN THE FIELD. DEVIATIONS FROM THE DESIGN MAY CAUSE THE SYSTEM TO BE UNABLE TO CONTROL A FIRE. IF THE BUILDING CONSTRUCTION DIFFERS FROM THE FIRE SPRINKLER PLAN, CONTACT THE SYSTEM DESIGNER IMMEDIATELY.

4. THIS SYSTEM AND THE ACCOMPANYING HYDRAULIC CALCULATIONS ARE DESIGNED IN COMPLIANCE WITH NFPA 13D 2010 EDITION.

5. "STAND ALONE" OR "MULTIPURPOSE, WET PIPE" SYSTEMS ARE NOT PERMITTED TO USE ANTI-FREEZE.

6. MODIFICATIONS ARE PROHIBITED. SPRINKLERS THAT HAVE BEEN PAINTED, CAULKED, MODIFIED OR DAMAGED MUST BE REPLACED.

7. WATER SHUT OFF VALVE IS NOT PERMITTED.

8. OWNERS MANUAL MUST BE PROVIDED TO THE OWNER.

9. AT THE MAIN SHUT OFF VALVE, A TAG OR A SIGN STATING THE FOLLOWING IS REQUIRED; "WARNING, THE WATER SYSTEM FOR THIS HOME SUPPLIES FIRE SPRINKLERS THAT REQUIRE CERTAIN FLOWS AND PRESSURES TO FIGHT A FIRE. DEVICES THAT RESTRICT THE FLOW OR DECREASE THE PRESSURE OR AUTOMATICALLY SHUT OFF THE WATER TO THE FIRE SPRINKLER SYSTEM, SUCH AS WATER SOFTENERS, FILTRATION SYSTEMS AND AUTOMATIC SHUT OFF VALVES, **SHALL NOT** BE ADDED TO THIS SYSTEM WITHOUT REVIEW OF THE FIRE SPRINKLER SYSTEM BY A FIRE PROTECTION SPECIALIST. **DO NOT REMOVE THIS SIGN**".

10. ALL INTERIOR PIPING TO BE UPONOR "AquaPEX®" UNLESS NOTED.

11. UPONOR "AquaPEX" TUBING TO BE SUPPORTED PER NFPA 13D AND MANUFACTURER'S RECOMMENDATIONS.

12. MINIMUM SPACING BETWEEN SPRINKLERS IS 8'-0" REFER TO SPACING CHARTS FOR MAXIMUM SPACING BETWEEN SPRINKLERS AND FROM WALLS.

13. SPRINKLERS ARE NOT NECESSARILY CENTERED IN ROOMS DUE TO LIGHT FIXTURES OR OTHER CEILING MOUNTED OBSTRUCTIONS.

14. THE PLUMBING TIE IN CONNECTIONS ARE SCHEMATIC IN NATURE AND CAN BE INSTALLED OFF THE SPRINKLER LOOP ANYWHERE BETWEEN SPRINKLER TO SPRINKLER CONNECTION.

15. THIS SUGGESTED LAYOUT IS BASED UPON INFORMATION PROVIDED BY OTHERS. CHANGES IN CONSTRUCTION OR FIELD CONDITIONS MAY OCCUR WHICH MAY REQUIRE CHANGES TO THE LAYOUT. IT IS THE RESPONSIBILITY OF THE INSTALLER TO NOTIFY UPONOR TECHNICAL SERVICES OF SUCH CHANGES.

16. INSULATION GUIDE LINES PER NFPA 13D.
- 8.3.1* WET PIPE SYSTEMS. A WET PIPE SYSTEM SHALL BE PERMITTED TO BE TO BE USED WHERE ALL PIPING IS INSTALLED IN AREAS MAINTAINED ABOVE 40ºF, INCLUDING AREAS PROPERLY INSULATED TO MAINTAIN 40ºF.
  - A.8.3.1 IN AREAS SUBJECT TO FREEZING, CARE SHOULD BE TAKEN IN UNHEATED ATTIC SPACES TO COVER SPRINKLER PIPING COMPLETELY WITH INSULATION. INSTALLATION SHOULD FOLLOW THE GUIDELINES OF THE INSULATION MANUFACTURER. FIGURE A.8.3.1(A) THROUGH FIGURE A.8.3.1(E) SHOW SEVERAL METHODS THAT CAN BE CONSIDERED.

17. NFPA 13D 8.6 LOCATION OF SPRINKLERS.
- 8.6.1 SPRINKLERS SHALL BE INSTALLED IN ALL AREAS EXCEPT WHERE OMISSION IS PERMITTED BY 8.6.2 THROUGH 8.6.7.
- 8.6.2 SPRINKLERS SHALL NOT BE REQUIRED IN BATHROOMS OF 55 FT² (5.1 M²) AND LESS
- 8.6.3 SPRINKLERS SHALL NOT BE REQUIRED IN CLOTHES CLOSETS, LINEN CLOSETS, AND PANTRIES THAT MEET ALL OF THE FOLLOWING CONDITIONS:
  (1) THE AREA OF THE SPACE DOES NOT EXCEED 24 FT² (2.2 M²).
  (2) THE LEAST DIMENSION DOES NOT EXCEED 3 FT (0.9 M).
  (3) THE WALLS AND CEILINGS ARE SURFACED WITH NONCOMBUSTIBLE OR LIMITED-COMBUSTIBLE MATERIALS AS DEFINED IN NFPA 220, STANDARD ON TYPES OF BUILDING CONSTRUCTION.
- 8.6.4* SPRINKLERS SHALL NOT BE REQUIRED IN GARAGES, OPEN ATTACHED PORCHES, CARPORTS, AND SIMILAR STRUCTURES
  - A.8.6.4 ALTHOUGH NFPA 13D DOES NOT REQUIRE GARAGES TO BE SPRINKLERED, SOME AUTHORITIES HAVING JURISDICTION TAKE IT UPON THEMSELVES TO ADD THIS REQUIREMENT LOCALLY. IN SUCH CIRCUMSTANCES, RESIDENTIAL OR QUICK-RESPONCE SPRINKLERS WITH A TWO-SPRINKLER DESIGN IN THE GARAGE WITH THE SAME PIPING USED IN THE REST OF THE DWELLING MAY BE USED. IT IS RECOGNIZED THAT RESIDENTIAL SPRINKLERS HAVE NOT BEEN TESTED SPECIFICALLY FOR FIRES IN GARAGES, BUT FIELD EXPERIENCE HAS SHOWN THAT THE SPRINKLERS HELP TO ALERT OCCUPANTS TO THE FACT THAT THERE IS A FIRE, CAN REDUCE THE POSSIBILITY OF FLASHOVER, AND CAN IMPROVE THE CHANCES FOR OCCUPANTS TO ESCAPE.
- 8.6.5 SPRINKLERS SHALL NOT BE REQUIRED IN ATTICS, PENTHOUSE EQUIPMENT ROOMS, ELEVATOR MACHINE ROOMS, CONCEALED SPACES DEDICATED EXCLUSIVELY TO AND CONTAINING ONLY DWELLING UNIT VENTILATION EQUIPMENT, FLOOR/CEILING SPACES, ELEVATOR SHAFTS, CRAWL SPACES, AND OTHER CONCEALED SPACES THAT ARE NOT USED OR INTENDED FOR LIVING PURPOSES AND DO NOT CONTAIN FUEL-FIRED EQUIPMENT.
- 8.6.6 SPRINKLERS SHALL NOT BE REQUIRED IN COVERED UNHEATED PROJECTIONS OF THE BUILDING AT ENTRANCES/EXITS AS LONG AS THERE IS ANOTHER MEANS OF EGRESS FROM THE DWELLING UNIT.
- 8.6.7 SPRINKLERS SHALL NOT BE REQUIRED FOR CEILING POCKETS THAT MEET THE FOLLOWING CONDITIONS:
  (1) THE TOTAL VOLUME OF UNPROTECTED CEILING POCKET DOES NOT EXCEED 100 FT³ (2.83 M³).
  (2) THE ENTIRE FLOOR UNDER THE UNPROTECTED CEILING POCKET IS PROTECTED BY THE SPRINKLERS AT THE LOWER CEILING ELEVATION.
  (3) EACH UNPROTECTED CEILING POCKET IS SEPARATED FROM ANY ADJACENT UNPROTECTED CEILING POCKET BY A MINIMUM 10 FT (3.05 M) HORIZONTAL DISTANCE.
  (4) THE INTERIOR FINISH OF THE UNPROTECTED CEILING POCKET IS NONCOMBUSTIBLE OR LIMITED-COMBUSTIBLE MATERIAL.
  (5) SKYLIGHTS NOT EXCEEDING 32 FT² (2.97 M²) SHALL BE PERMITTED TO HAVE A PLASTIC COVER.

Senju RC-RES: Open Web Truss Construction

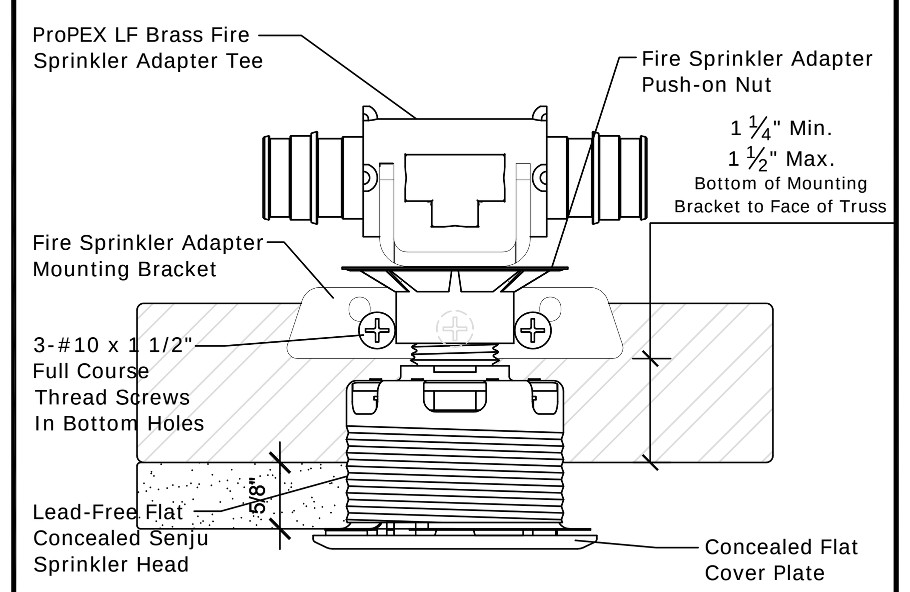

Senju RC-RES: Traditional Wood Framing Construction

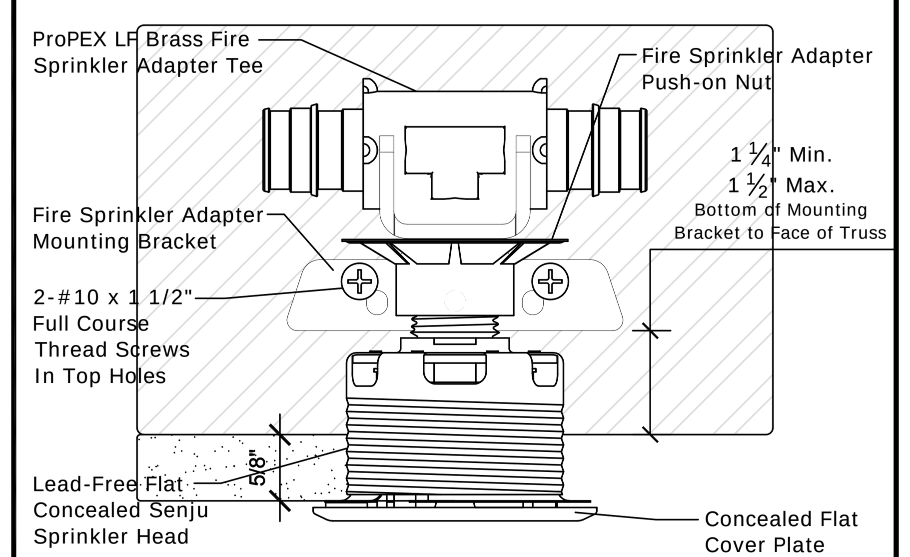

Senju RC-RES: TJI Construction

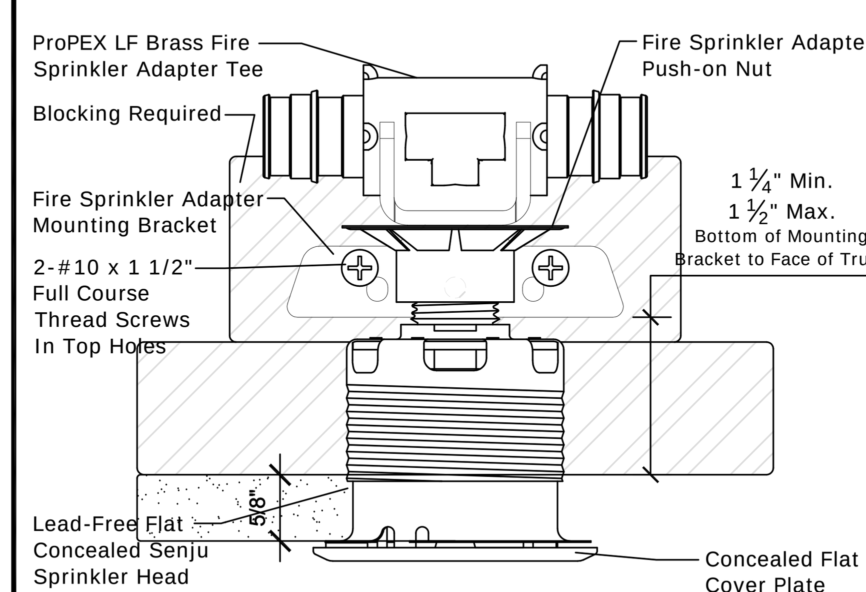

See General Notes 8.6.3 for Closet Requirements

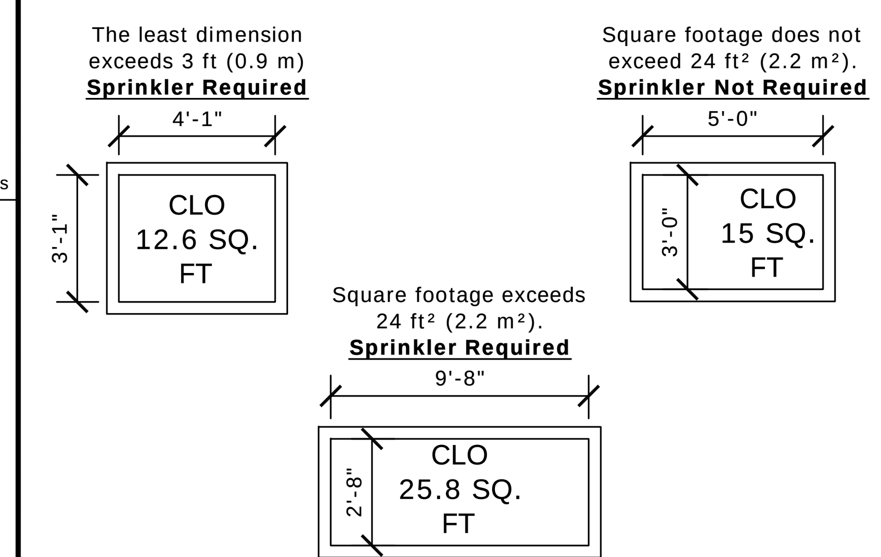

Slope Guide			
Slope: Rise / Run	**Pitch: Degrees**	**Slope: Rise / Run**	**Pitch: Degrees**
0/12	0°	9/12	36.87°
1/12	4.76°	10/12	39.81°
2/12	9.46°	11/12	42.51°
3/12	14.04°	12/12	45°
4/12	18.43°	13/12	47.29°
5/12	22.62°	14/12	49.40°
6/12	26.57°	15/12	51.34°
7/12	30.26°	16/12	53.13°
8/12	33.69°	17/12	54.78°
		18/12	56.31°

uponor

TECHNICAL SERVICES - DESIGN DEPARTMENT
5925 148th Street West, Apple Valley, MN 55124
T 888.594.7726 **F** 952.997.1731
EMAIL DESIGN.SERVICES@UPONOR.COM
WEB WWW.UPONOR-USA.COM

Insulation Recommendations

In areas subject to freezing, care should be taken in unheated attic spaces to cover Uponor AquaPEX tubing completely with insulation. Insulation should follow the guidelines of the insulation manufacturer. See Uponor Document "**Uponor AquaSAFE Attic Insulation Guidlines**" for attic installation guidelines (Provided in Contractors Documents package or online at **www.Uponorpro.com**).

Extreme Temperature Installations

AquaSAFE Residential Fire Safety systems are often installed in attics or other areas exposed to temperature extremes of heat and/or cold. Follow the recommended extreme weather installation instructions to isolate and protect system components from extreme temperatures. Because this system also delivers domestic cold water directly to plumbing fixtures, Uponor highly recommends that you protect the tubing with adequate insulation in warm weather areas to minimize heating of the cold water supply.

Installation methods include, but are not limited to:
- Tenting over the fire sprinkler piping.
- Additional layers of batt insulation.
- Increased depth of blown-in insulation.

Caution: If you will be installing spray foam insulation, make sure to protect all components during application. Consult with the spray foam manufacturer to ensure compatibility with all products before application.

Consultation with local building officials is encouraged to ensure compliance with local building codes.

NFPA 13D Table 7.5.5.3 Distances From Heat Sources

Heat Source	Ordinary Temp. 135°-170°	Intermediate Temp. 175°-225°
Side of Fireplace	36"	12"
Front of Fireplace	60"	36"
Wood Burning Stove	42"	12"
Kitchen Range	18"	9"
Wall Oven	18"	9"
Hot Air Flues	18"	9"
Uninsulated Heat Ducts	18"	9"
Uninsulated Hot Water Pipes	12"	6"
Side of Hot Air Diffuser	24"	12"
Front of Hot Air Diffuser	36"	18"
Hot Water Heater	6"	3"
Furnace	6"	3"
5OW-250W Light Fixture	6"	3"
25OW-499W Light Fixture	12"	6"

DISCLAIMER

THIS SERIES OF PLUMBING, HYDRONIC HEATING/COOLING, SNOW AND ICE MELTING, AND/OR FIRE SPRINKLER TECHNICAL DRAWINGS HAVE BEEN DESIGNED BY UPONOR, INC. TECHNICAL SERVICES - DESIGN DEPARTMENT. THEY HAVE BEEN PREPARED TO MEET PROFESSIONAL STANDARDS OF DESIGN AND CONSTRUCTION. BEFORE STARTING ALL WORK ASSOCIATED WITH THIS DESIGN, IT IS MANDATORY TO MAKE A CAREFUL CHECK OF PIPE SIZE, CALCULATIONS, MATERIALS, PLUMBING AND/OR FIRE CODES USED. REPORT ANY ERRORS AND/OR DESIGN CHANGES TO UPONOR, INC. TECHNICAL SERVICES - DESIGN DEPARTMENT TO DETERMINE IF THE DESIGN REQUIRES REVISION. IF ERRORS AND/OR DESIGN CHANGES ARE NOT REPORTED BACK TO UPONOR, INC., IT IS THE SOLE RESPONSIBILITY OF THE INSTALLER TO ENSURE SYSTEM DESIGN WILL FUNCTION IN ACCORDANCE WITH ALL APPLICABLE CODES AND EXPECTATIONS. THERE IS NO WARRANTY WRITTEN, EXPRESSED OR IMPLIED FOR DAMAGES THAT MAY RESULT FROM THE APPLICATION AND INCORRECT INTERPRETATION OF THESE DRAWINGS.

SALES REP:

Bending PEX Tubing

The minimum bend radius of Uponor PEX tubing in any direction is six times the outside diameter (**6 x OD**).
Bend supports are available for 3/8", 1/2", 3/4" and 1" Uponor AquaPEX tubing to facilitate 90-degree rigid bends.

Recommended Tubing Length Between Fittings	
Fitting Size	**Minimum Tubing Length**
3/8" ProPEX Fitting	2"
1/2" ProPEX Fitting	2 1/2"
3/4" ProPEX Fitting	3 1/2"
1" ProPEX Fitting	4 1/2"
1 1/4" ProPEX Fitting	5 1/2"

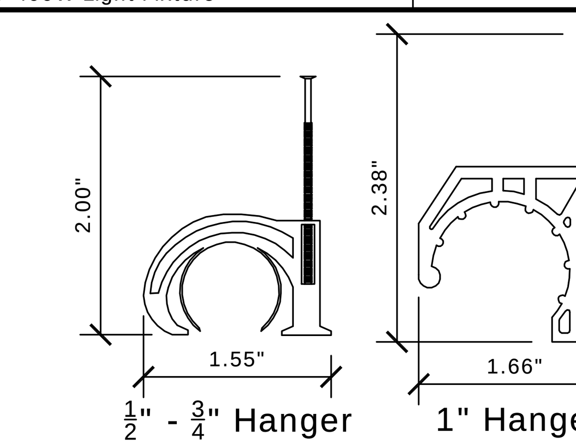

Tubing Support Spacing:

(Anchor AquaPEX Tubing Securely Enough to Support the Tubing, Yet Relaxed Enough to Allow the Tubing to Expand and Contract)

1. Along Horizontal Runs, Install Supports Every 32", if Horizontal Runs are Continuously Supported, Place Tubing Supports at Six-Foot Intervals.
2. Along Vertical Runs, Install Supports Every Four to Five Feet, at Each Floor and at a Mid-story Guide.

Standard Riser Assembly

In a multi-purpose system a single control valve controls both domestic and fire safety needs.

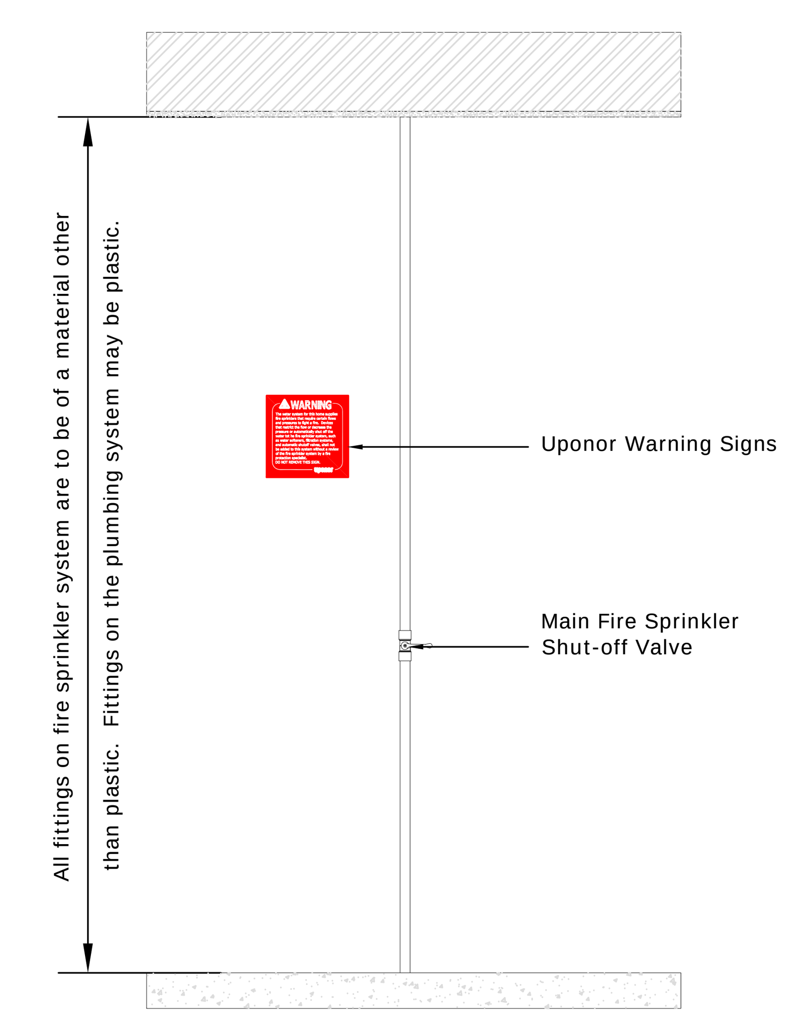

In-line Flow Test

The In-line Flow Test can be constructed on site. It performs a flow test to ensure proper system operation and flow.

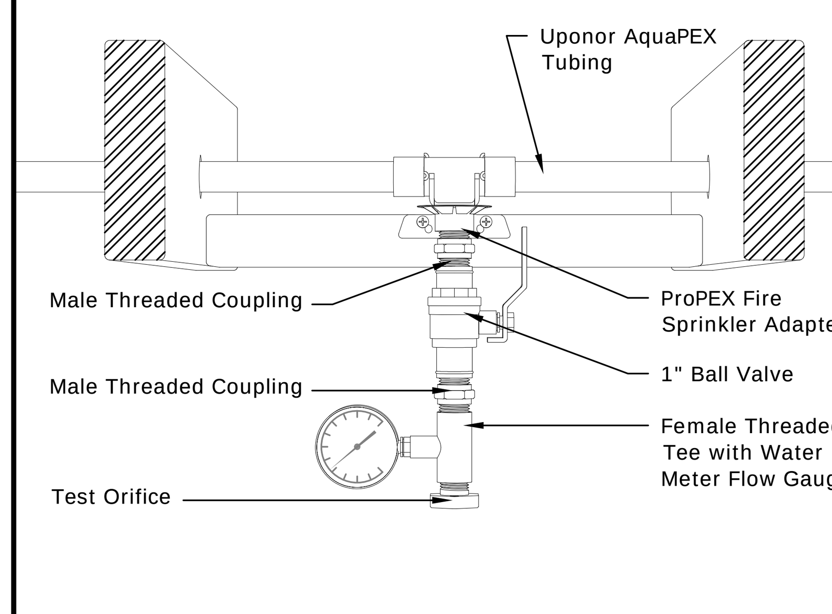

Flow Test

To ensure the system provides enough water for proper fire sprinkler performance, you should conduct a flow verification test.

Note: The NFPA 13D Installation Standard does not require flow verification.

Before performing a flow verification test, confirm the water pressures by contacting the Water and Sewer Department of your local city. Ensure the available water pressure matches the pressure used in the system design.

Note: The sprinkler plan indicates the most hydraulically remote sprinkler (or pair of sprinklers). For test requirements on other sprinklers, consult your local code.

Note: It is a good idea to notify the fire inspector at least 24 hours prior to performing a flow verification test. This may speed up the inspection process and eliminate the need to repeat the test for the inspector.

Note: See "**AquaSAFE Flow Test Instruction Sheet**" (Provided in Contractors Documents package or online at **www.Uponorpro.com**) for more information on Flow Test Setup, Assembly, Performing the Test and Troubleshooting. If there are any questions please contact Uponor.

JERRIER RESIDENCE
243 TAFT AVE
PORTLAND, ME 04103

DRAWN BY:	BRENT KOTULA, SET IV	CONTACT PH. NUMBER:	207-939-4515
CHECKED BY:	DAN HUBBARD	ALLIANCE ID:	TBD
CERTIFICATION LEVEL:	SET IV	PLOT DATE:	4/9/13
CERTIFICATION NUMBER:	115052	SHEET SCALE:	N.T.S.
COMPANY:	FORTIN SERVICES	PROJECT NUMBER:	13262F
CONTACT:	CHARLES FORTIN	SQUARE FEET:	2516 SQ. FT.

REVISIONS

NO.	DATE	DESCRIPTION

SHEET DESCRIPTION

GENERAL NOTES AND DETAILS

SHEET NUMBER

F001