S3 RE-SUBMITTAL
1- BEAM DATA
2- ATTACHMENT DATA

COASTAL FOREST PRODUCTS, INC.

Project Name: 253 HOLM AVE	Job#:	Client	Shipping
		Quantity 1 (3pcs.)	Description:

2.0E CP-LAM 1.750" X 14.000" 3-Ply - PASSED

1/17/2014 10:40 AM
Page 1 of 1
Designer: Gabe Labelle

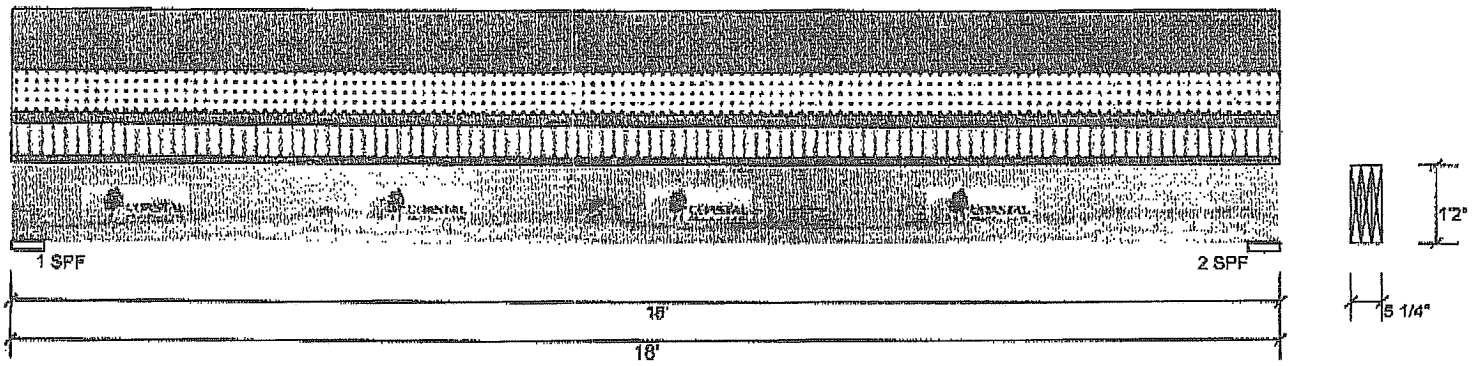

Type:	Girder	Application:	Floor
Plies:	3	Design Method:	ASD
Moisture Condition:	Dry	Building Code:	IBC 2012 / IRC
Deflection LL:	360	Load Sharing:	Yes
Deflection TL:	240	Deck:	5/8"SPF Plywood Nailed
Importance:	Normal	Vibration:	Not Checked
Temperature:	Temp <= 100°F		

Reactions

Brg	Live	Dead	Snow	Wind	Const
1	2797	2634	3845	0	0
2	2797	2634	3845	0	0

Bearings

Bearing	Input Length	In Analysis	Cap.	React D/L lb	Total	Ld. Case	Ld. Comb.
1 - SPF	5.500"	3.500"	98%	2634 / 4982	7615	L	D+0.75(L+S)
2 - SPF	5.500"	3.500"	98%	2634 / 4982	7615	L	D+0.75(L+S)

Analysis	Actual	Location	Allowed	Capacity	Load Comb.	Ld. Case
Moment	32796 ft-lb	9'	51379 ft-lb	0.638 (64%)	D+0.75(L+S)	L
Shear	6536 lb	-1'5 3/4"	16060 lb	0.407 (41%)	D+0.75(L+S)	L
LL Defl inch	0.484 (L/431)	9' 1/16"	0.579 (L/360)	0.840 (84%)	0.75(L+S)	L
TL Defl inch	0.738 (L/283)	9' 1/16"	0.869 (L/240)	0.850 (85%)	D+0.75(L+S)	L

Design OK.

Design Notes

1 Girders are designed to be supported on the bottom edge only.
2 Multiple plies must be fastened together as per manufacturer's details.
3 Top loads must be supported equally by all plies.

ID	Load Type	Location	Trib Width	Side	Dead	Live	Snow	Wind	Const.	Comments
	Uniform		8-0-0	Top	10 PSF	40 PSF	0 PSF	0 PSF	0 PSF	
	Uniform		8-0-0	Top	15 PSF	0 PSF	55 PSF	0 PSF	0 PSF	
	Uniform			Top	80 PLF	0 PLF	0 PLF	0 PLF	0 PLF	
	Self Weight				19 PLF					

Notes

Calculated Structural Designs is responsible only for the structural adequacy of this component based on the loadings shown. It is the customer and/or the contractor to verify suitability of the material for the dimensions and loads shown, unless noted otherwise.

Wood with fire retardant or corrosive chemicals

Handling & Installation

1 LVL beams must not be cut or drilled
2 Refer to manufacturer's product information regarding installation requirements, multi-ply fastening details, beam strength values, and code approvals
3 Damaged beams must not be used
4 Design assumes top edge is laterally restrained
5 Provide lateral support at bearing points to avoid lateral displacement and rotation
6 For flat roofs provide proper drainage to prevent ponding

Coastal Forest Products
451 South River Rd, NH
USA
03110

COASTAL FOREST PRODUCTS, INC.

CITY OF PORTLAND MAINE
Inspections Division
Date: 03/17/14

S3 | RE-SUBMITTAL ATTACHMENT DATA

SIMPSON Strong-Tie

LGUM/HGUM *High Capacity Beam/Girder Hangers for Concrete/Masonry*

High-capacity beam or girder hangers for concrete or masonry applications. Installation is made easier using Simpson Strong-Tie® Strong-Drive® SDS screws *(provided)* into the wood member and Titen HD® anchors *(provided)* into the masonry.

MATERIAL: See table **FINISH:** Galvanized

INSTALLATION:
- Use all specified fasteners *(included)*.
- Attach hanger to a concrete or grouted CMU wall using Titen HD anchors. Note the following:
  - Drill holes using drill bits equal in diameter to the specified Titen HD anchor.
  - Holes shall be drilled ½" deeper than the specified Titen HD length *(i.e. 4½" for a 4" long Titen HD anchor)*
  - Caution: Oversized holes in the base material will reduce or eliminate the mechanical interlock of the threads with the base material and will reduce the anchor's load capacity.
- Titen HD is not recommended for exposed exterior applications.
- Provide moisture barrier between beam and wall per jurisdictional requirements.

OPTIONS:
- For HGUM only—Other seat widths available. Order as "X" version.
- HGUM available with one flange concealed.
- LGUM/HGUM available in skews up to 45°. See Hanger Options, pages 215-224.

CODES: See page 13 for Code Reference Key Chart.

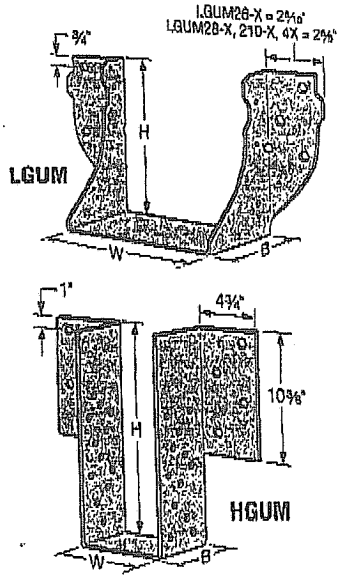

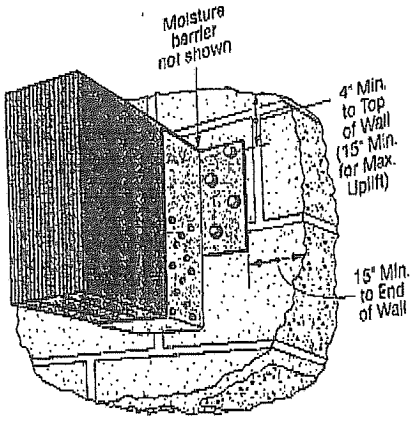

Typical HGUM Installation

Model No.	Ga	Dimensions W	Dimensions H	Dimensions B	Fasteners CMU/Concrete Titen HD Anchors	Fasteners Joist SDS Screws	Allowable Loads Uplift (160) 4" Min. to Top of Wall	Uplift (160) 15" Min. to Top of Wall	Download (DF, SP, LVL, PSL, LSL) CMU (100/115/125)	Download Concrete (100/115/125)	Code Ref.
DOUBLE 2x SIZES											
LGUM26-2-SDS	12	3 5/16	5 7/16	4	4 - ¾"x4"	4 - ¼"x2½"	1430	1430	5595		
LGUM28-2-SDS	12	3 5/16	7 3/16	4	6 - ⅜"x4"	6 - ¼"x2½"	2435	2435	8250		
LGUM210-2-SDS	12	3 5/16	9 9/16	4	8 - ⅜"x4"	8 - ¼"x2½"	3575	3575	9575		
TRIPLE 2x SIZES											
LGUM26-3-SDS	12	4 15/16	5¼	4	4 - ⅜"x4"	4 - ¼"x2½"	1430	1430	5610		
LGUM28-3-SDS	12	4 15/16	7¼	4	6 - ⅜"x4"	6 - ¼"x2½"	2435	2435	8290		
LGUM210-3-SDS	12	4 15/16	9¼	4	8 - ⅜"x4"	8 - ¼"x2½"	3575	3575	9715		
QUADRUPLE 2x SIZES											
LGUM26-4-SDS	12	6 9/16	5 7/16	4	4 - ⅜"x4"	4 - ¼"x2½"	1430	1430	5625		
LGUM28-4-SDS	12	6 9/16	7 3/16	4	6 - ⅜"x4"	6 - ¼"x2½"	2435	2435	8335		F27
LGUM210-4-SDS	12	6 9/16	9 9/16	4	8 - ⅜"x4"	8 - ¼"x2½"	3575	3575	9860		
4x SIZES											
LGUM46-SDS	12	3⅝	4⅞	4	4 - ⅜"x4"	4 - ¼"x2½"	1430	1430	5600		
LGUM48-SDS	12	3⅝	6⅞	4	6 - ⅜"x4"	6 - ¼"x2½"	2435	2435	8260		
LGUM410-SDS	12	3⅝	8⅞	4	8 - ⅜"x4"	8 - ¼"x2½"	3575	3575	9620		
ENGINEERED WOOD & STRUCTURAL COMPOSITE LUMBER SIZES (Heavy Duty)											
HGUM5.25-SDS	7	5¼	11 to 30	5¼	8 - ⅝"x5"	24 - ¼"x2½"	4230[2]	6180[2]	14965	16015	
HGUM5.50-SDS	7	5½		5¼	8 - ⅝"x5"	24 - ¼"x2½"	4230[2]	6180[2]	14940	16015	
HGUM7.00-SDS	7	7		5¼	8 - ⅝"x5"	24 - ¼"x2½"	4230[2]	6180[2]	14770	16015	
HGUM7.25-SDS	7	7¼		5¼	8 - ⅝"x5"	24 - ¼"x2½"	4230[2]	6180[2]	14740	16015	
HGUM9.00-SDS	7	9		5¼	8 - ⅝"x5"	24 - ¼"x2½"	4230[2]	6180[2]	14545	16015	

1. Uplift loads have been increased for wind or earthquake loading with no further increase is allowed.
2. HGUM uplift loads for concrete applications are 5840 lbs. with a 4" min. distance to top of wall and 6960 lbs. with a 15" min. distance to top of wall.
3. Minimum f'_m = 1500 psi and f'_c = 2500 psi.
4. LGUM must be installed on minimum 6" thick wall and HGUM on minimum 8" thick wall. *(Nominal values for CMU)*
5. Titen HD anchors may be installed into the head or bed joints.
6. Simpson Strong-Tie Strong-Drive screws are permitted to be installed through metal truss plates as approved by the Truss Designer, provided the requirements of ANSI/TPI 1-2007 Sections 7.5.3.4 and 8.9.2 are met *(pre-drilling required through the plate using a maximum of 5/32" bit)*.

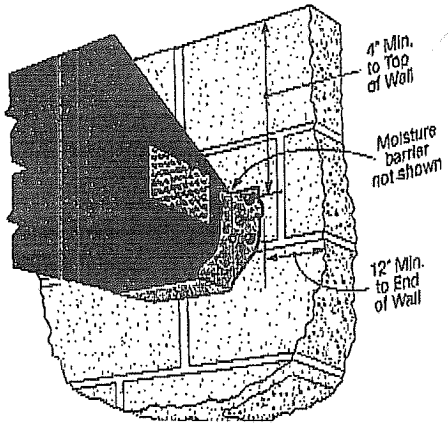

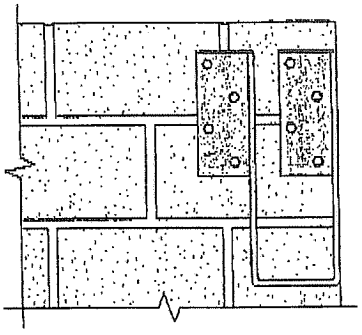

HGUM with right flange concealed

Masonry Connectors

RESURGAM CITY OF PORTLAND MAINE
Inspections Division
Date: 03/17/14