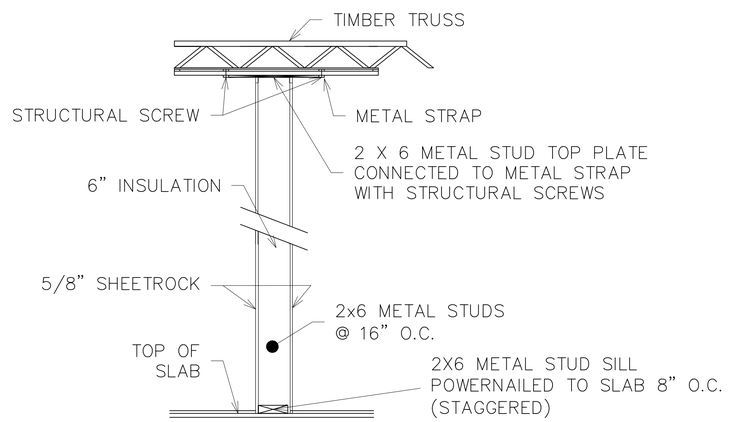

TYPICAL INTERIOR WALL SECTION

NTS

NO.	DESCRIPTION	DATE
	REVISIONS	

PORTLAND SPORTS CENTER
WARREN AVENUE PORTLAND, MAINE

FOR: JIM GRATTELO
PORTLAND SPORTS REALTY, LLC
550 WARREN AVE
PORTLAND, MAINE 04103

ATTAR ENGINEERING, INC.
CIVIL ◆ STRUCTURAL MARINE
1284 STATE ROAD – ELIOT, MAINE 03903
PHONE: (207)439–6023 FAX: (207)439–2128

SCALE: AS NOTED	APPROVED BY:	DRAWN BY: STB
DATE: 8/26/14		REVISION : DATE – : –
JOB NO: C068–14	CAD FILE: DOME_CEILING	SHEET 1