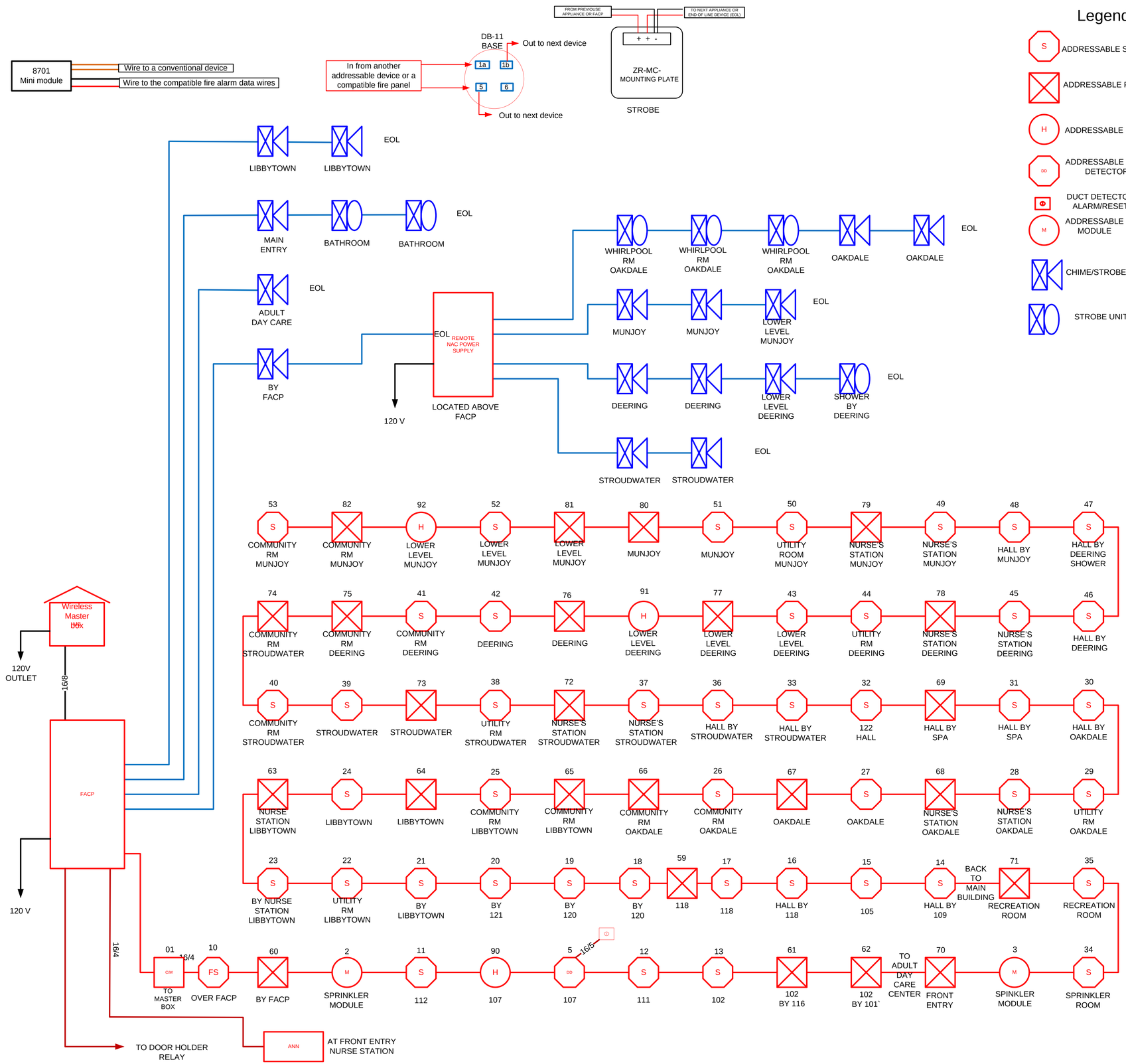

Legend

- ADDRESSABLE SMOKE
- ADDRESSABLE PULL
- ADDRESSABLE HEAT
- ADDRESSABLE DUCT DETECTOR
- DUCT DETECTOR ALARM/RESET
- ADDRESSABLE MODULE
- CHIME/STROBE UNIT
- STROBE UNIT

GENERAL NOTES

1. FIRE ALARM SYSTEM WIRING MUST COMPLY WITH THE NATIONAL ELECTRICAL CODE, APPLICABLE STATE AND LOCAL CODES, AND SHALL BE COORDINATED WITH THE LOCAL AUTHORITY HAVING JURISDICTION.

2. CAUTION: DO NOT CONNECT ANY POWER TO THE CONTROL PANEL (BATTERIES OR 120V AC) UNTIL ALL OTHER FIELD WIRING IS TESTED AND CONNECTED.

3. DO NOT INSTALL FIRE ALARM CONTROL PANEL OR SMOKE DETECTORS IN AN UNHEATED AREA.

4. DO NOT INSTALL ANY AC CURRENT-CARRYING CONDUCTORS CLOSE TO OR IN THE SAME RACEWAY WITH FIRE ALARM SYSTEM CONDUCTORS.

5. SOLID LINES REPRESENT CONNECTIONS TO BE MADE BY THE SYSTEM INSTALLER.

6. SEE MODEL __FC-922_ INSTALLATION MANUAL FOR ADDITIONAL WIRING INSTRUCTIONS.

7. ALL RELAYS ARE SHOWN IN NORMAL SUPERVISORY CONDITION. ALL RELAYS ARE FORM "C" TYPE.

INSTALLATION NOTES

1. SMOKE DETECTORS SHALL NOT BE MOUNTED ANY CLOSER THAN 3' FROM ANY AIR DUCT OPENINGS
2. ELEVATOR LOBBY SMOKE DETECTORS SHALL BE MOUNTED WITHIN 10' OF THE ELEVATOR DOOR
3. MANUAL PULL STATIONS SHALL BE MOUNTED PER ADA REQUIREMENTS: 48" AFF OR 42" AFF TO COMPLY WITH SIDE/FRONT REACH REQUIREMENTS
4. WALL MOUNTED HORN/STROBES & STROBES SHALL BE MOUNTED 6" FROM CEILING, OR 96" TO 80" AFF TO THE CENTER OF STROBE
5. HORN/STROBES & STROBES SHALL BE MOUNTED 15' FROM THE CORNER OF THE WALL. IF THIS IS NOT POSSIBLE, DEVICE SHALL BE CENTERED ON THAT WALL.
6. CEILING MOUNTED HALLWAY DEVICES SHALL BE LOCATED IN A SYMMETRICAL MANNER DOWN CENTER OF HALLWAY WHEN POSSIBLE

NOTIFICATION TO INSTALLERS

1. Do not use any other Riser Diagram than this one. Any changes shall be indicated under Revisions. Confirm with our office that you are using the latest issue before starting work.
2. Please call our office *at least ten days* in advance to schedule Final Connections & Testing (referred to as "Finals").
3. Prior to our arrival at the jobsite to perform "Finals", all of your wires must be:
   a. Labeled by zone and device location per the Riser Diagram.
   b. Free of *grounds*, *shorts* or *opens*.
   c. *Polarity* must be maintained throughout.
   d. All circuits must show proper *resistance*.
   e. Shielded cable drain wires must be connected and fully isolated from contact with backboxes or any metal surface.
   f. Installed in accordance with N.F.P.A. #70 and N.F.P.A. #72.
4. We require that your cabling installer be present and ready to assist our Technicians on the day we perform the "Finals".
5. Before scheduling "Finals", contact our office and confirm the arrangements for Central Station Monitoring Service or municipal connections, whether provided through our firm or another party.
6. There may be additional charges to the contract if there are delays or extra labor due to improper wiring or uncompleted items.
7. If you have any questions regarding proper wiring methods or installation of the devices we have provided to you, *call our office* at 207.775.5755.

PROTECTION PROFESSIONALS
SINCE 1986

CONSULTANT:
PROTECTION PROFESSIONALS
325 US ROUTE ONE
FALMOUTH, ME. 04105
Phone: (207) 775-5755
Fax: (207) 781-2064

PROJECT:
BARRON CENTER BCII
1145 BRIGHTON AVENUE
PORTLAND, MAINE

DRAWING:
LAYOUT
RISER

REVISIONS

DATE:	03-13-2013
SCALE:	
DRAWN BY:	SA
PROJECT NO.	0001
SHEET:	F1 of 1