ADDENDUM #1

TO THE CONTRACT DOCUMENTS FOR:
PHASE II
EVERGREEN CREDIT UNION
225 RIVERSIDE STREET
PORTLAND, MAINE

ARCHITECT'S PROJECT NUMBER 070901

GRANT HAYS ASSOCIATES
P. O. BOX 6179
FALMOUTH, MAINE 04105
207-871-5900
207-871-9308 FAX

NOVEMBER 26, 2007

This addendum modifies, amends, and supplements designated parts of the Contract Documents, Project Specifications, and Drawings for the Phase II Evergreen Credit Union, 225 Riverside Street, Portland, Maine, dated November 12, 2007, and is hereby made part thereof by reference and shall be as binding as though inserted in its entirety in the locations specified herein. It shall be the responsibility of the Contractor to notify all subcontractors and suppliers he/she proposes to use for the various parts of the work of any changes or modifications contained in this addendum.

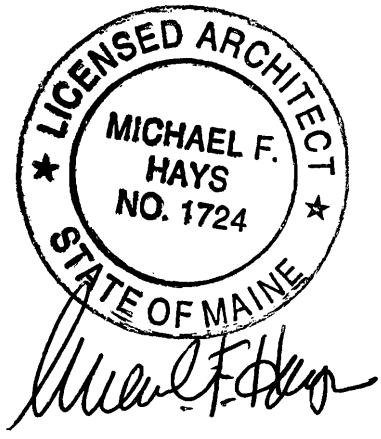

Addendum #1

CHANGES TO THE SPECIFICATIONS

SECTION 16000 – ELECTRICAL

ADD Light Fixture Catalog Cuts for Type "A" & "B" as attached.

CHANGES TO THE DRAWINGS

ADD E1 – SECOND FLOOR PLAN FOR POWER & COMMUNICATIONS as attached.

ADD E2 – REFLECTED CEILING PLAN LIGHTING & SWITCHING as attached.

End of Addendum

Coffaire II Recessed Fluorescent **CFH2GPF2FT or 3FT**

Direct/Indirect – 2' x 2' with Perforated Basket
Air Handling/Static, 2 Lamp or 3 Lamp, Twin Tube T5

Features

- Direct/indirect lamp shield appearance.
- Perforated mesh lamp shield with white acrylic overlay.
- Contoured body and ends.
- Air return models meet UL 1598, Paragraph 9.2.2.5 requirements.
- 68.1% efficient (2 lamp).
- 55.2% efficient (3 lamp).
- Spacing to mounting ratio 1.4 (2 lamp).
- Spacing to mounting ratio 1.3 (3 lamp).
- Only 5" deep.
- Tension bars secure ends to body.
- Same fixture fits both G and T ceiling.
- Fits flush to face of slot grid (T) ceiling.
- Static models have injection molded light stop at basket ends.
- Perforated lamp shield hinges from either side.
- Ballast accessible from room side.
- Can be continuous row mounted.
- Wiring access plate standard.
- Construction to meet NYC Code or Chicago Plenum requirement is available.

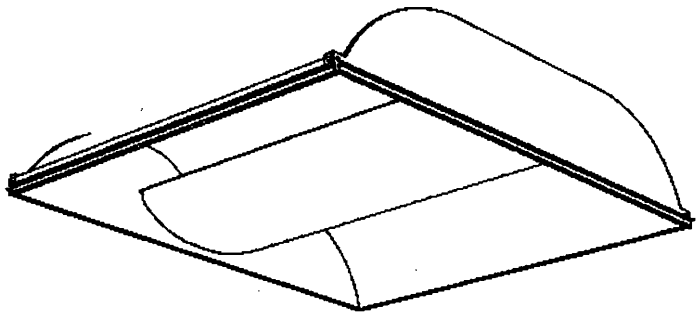

Mounting Methods

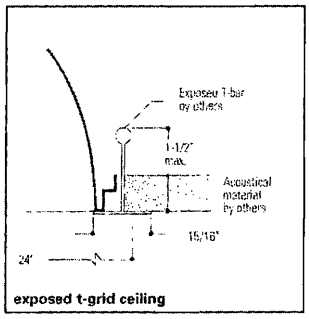

exposed t-grid ceiling

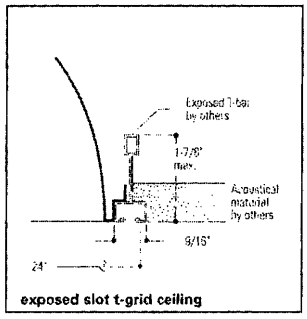

exposed slot t-grid ceiling

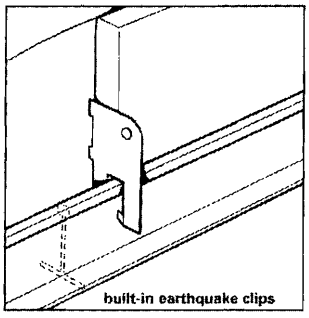
built-in earthquake clips

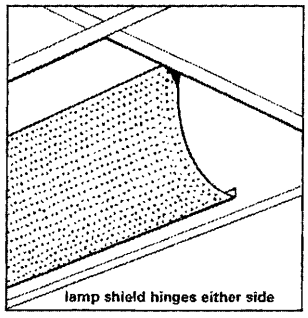
lamp shield hinges either side

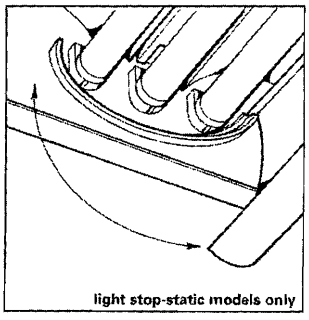
light stop-static models only

Dimensions

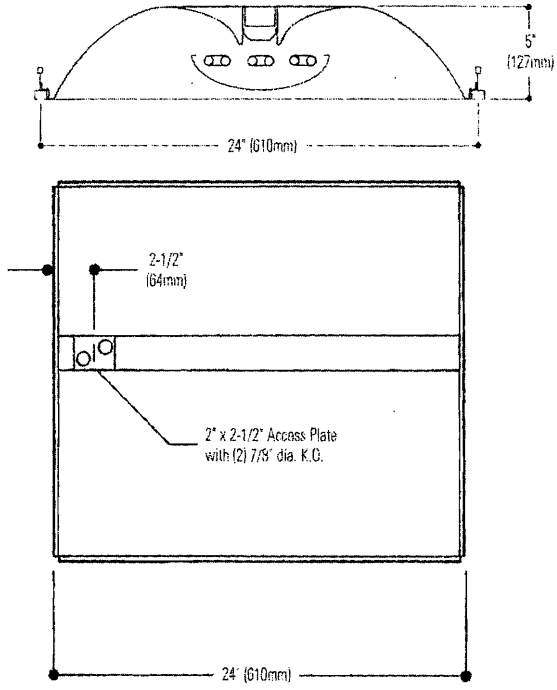

Job Information	**Type:** 'A'
Job Name:	
Cat. No.:	
Lamp(s):	
Volts/Ballast:	

Lightolier a Genlyte company www.lightolier.com
Technical Information: (978) 657-7600 • Fax (978) 658-0595
631 Airport Road, Fall River, MA 02720 • (508) 679-8131 • Fax (508) 674-4710
We reserve the right to change details of design, materials and finish.
© 2005 a Genlyte company

LIGHTOLIER®

Coffaire II Recessed Fluorescent **CFH2GP2FT or 3FT**

Direct/Indirect – 2' x 2' with Perforated Basket
Air Handling/Static, 2 Lamp or 3 Lamp, Twin Tube T5

Model No. CFH2GPF2FT120SB

LER = FP - 56.2 IW - 65.5 BF - 0.86
Comparative yearly lighting energy cost per 1000 lumens = $4.27

Report Number: G2004033
Catalog Number: CFH2GPF2FT120SB
Lamps: F40 30BX/SPX35
Luminaire: Coffaire II with perforated basket
Ballast: Triad C240S1120
Report is based on 3150 Lumens per lamp.
Efficiency: 68.1%

CIE Type-Direct-Indirect

Plane:	0-Deg	90-Deg
Spacing Criteria:	1.2	1.4
Shielding Angles:	90	90
Plane:	0-Deg	90-Deg
Luminous Length:	22.920	22.920

CANDELA DISTRIBUTION

	0.0	45.0	90.0	FLUX
0	1423	1423	1423	
5	1416	1416	1417	135
15	1354	1369	1385	387
25	1242	1283	1331	593
35	1089	1168	1251	732
45	897	1024	1130	786
55	669	844	949	738
65	423	607	665	569
75	200	295	300	290
85	37	53	56	61
90	0	0	0	

COEFFICIENTS OF UTILIZATION – ZONAL CAVITY METHOD. EFFECTIVE FLOOR CAVITY REFLECTANCE 0.20

RC	80			50			30		
RW	70	50	30	50	30	10	50	30	10
1	74	71	68	66	64	62	64	62	60
2	67	62	57	58	54	51	56	53	50
3	61	54	48	51	46	43	49	45	42
4	56	48	41	45	40	36	43	39	36
5	51	42	36	40	35	31	39	34	31
6	47	38	32	36	31	27	35	30	27
7	44	34	28	33	28	24	32	27	24
8	41	31	25	30	25	21	29	24	21
9	38	29	23	28	23	19	27	22	19
10	36	26	21	25	21	17	25	20	17

LUMINANCE DATA IN CANDELA/SQ. METER

AVERAGE IN DEG.	AVERAGE 0-DEG.	AVERAGE 45-DEG.	AVERAGE 90-DEG.
45	3742.	4271.	4713.
55	3440.	4340.	4860.
65	2952	4236.	4641.
75	2279	3362.	3419.
85	1252.	1794.	1895.

ZONAL LUMEN SUMMARY

ZONE	LUMENS	% LAMP	% FIXT
0- 30	1115	17.7	26.0
0- 40	1847	29.3	43.1
0- 60	3370	53.5	78.6
0- 90	4289	68.1	100.0
90-180	0	0.0	0.0
0-180	4289	68.1	100.0

Model No. CFH2GPF3FT120X3

LER = FP - 41.2 IW - 111.1 BF - 0.88
Comparative yearly lighting energy cost per 1000 lumens = $5.85

Report Number: G2004247
Catalog Number: CFH2GPF3FT120X3
Lamps: F40/TT5
Luminaire: Coffaire II with perforated basket
Ballast: UT340120
Report is based on 3150 Lumens per lamp.
Efficiency: 55.2%

CIE Type-Direct-Indirect

Plane:	0-Deg	90-Deg
Spacing Criteria:	1.2	1.3
Shielding Angles:	90	90
Plane:	0-Deg	90-Deg
Luminous Length:	22.920	22.920

CANDELA DISTRIBUTION

	0.0	45.0	90.0	FLUX
0	1878	1878	1878	
5	1848	1861	1878	177
15	1746	1789	1826	506
25	1582	1658	1726	766
35	1364	1479	1582	927
45	1100	1258	1396	966
55	796	935	1125	874
65	474	606	753	641
75	213	299	326	304
85	40	49	50	59
90	0	0	0	

COEFFICIENTS OF UTILIZATION – ZONAL CAVITY METHOD. EFFECTIVE FLOOR CAVITY REFLECTANCE 0.20

RC	80			50			30		
RW	70	50	30	50	30	10	50	30	10
1	60	58	55	54	52	51	52	51	49
2	55	50	47	47	45	42	46	43	41
3	50	44	40	42	39	35	40	37	35
4	46	39	34	37	33	30	36	32	30
5	42	35	30	33	29	26	32	29	26
6	39	32	27	30	26	23	29	25	23
7	36	29	24	27	23	20	26	23	20
8	34	26	21	25	21	18	24	21	18
9	31	24	19	23	19	16	22	19	16
10	29	22	18	21	17	15	21	17	15

LUMINANCE DATA IN CANDELA/SQ. METER

AVERAGE IN DEG.	AVERAGE 0-DEG.	AVERAGE 45-DEG.	AVERAGE 90-DEG.
45	4988	5247	5731
55	4093.	5117.	5795.
65	3308.	4788.	5255.
75	2434.	3407.	3715.
85	1354.	1658.	1692.

ZONAL LUMEN SUMMARY

ZONE	LUMENS	% LAMP	% FIXT
0- 30	1449	15.3	27.8
0- 40	2376	25.1	45.6
0- 60	4231.6	44.6	80.3
0- 90	5219	55.2	100.0
90-180	0	0.0	0.0
0-180	5219	55.2	100.0

Ordering Information

Explanation of Catalog Number. Example: CFH2GPF2FT120SB

[ ]	[ ]	2	G	P	F	[ ]	FT	[ ]	[ ]	[ ]
Coffaire II: Direct/ Indirect: Recessed with Perforated Mesh Shield	**Body Style:** S = Static H = Air Return	**Fixture Width**	**Ceiling Type:** Fits both Standard Grid and Slot Grid	**Perforated Lamp Shield**	**Flat White Reflector**	**Lamp Quantity** 2=2 Lamp 3=3 Lamp	**Lamp:** (By Others)	**Voltage:** 120, 277 or UNV=120-277	**Ballast Type:**	**Options:** Add appropriate suffix to catalog no., ie: (GLR)

CF	Standard Coffaire II
CY	For NYC Code – I.B.E.W. Manufactured
CN	For NYC Code – Local 3 Manufactured

	<20THD	<10THD
1-2 Lamp Elec. TT5 (40 Watt)	**SB** *	**IB** *
1-3 Lamp Elec. TT5 (40 Watt)	**X3** *	**I3** *
LOL Dimming TT5	**PB**	–

*Instant Start Standard
Other dimming options. Consult factory.
NOTE:
For **TT5 UNV**, you must use **IB, I3** Ballast Code.

Options/Accessories

Fusing: Internal fast blow fusing: SUFFIX: **GLR**.
Internal slow blow fusing: SUFFIX: **GMF**.
Drywall Kit: Order Catalog Number: **FK92X2** and **CF2FK SPACER**.
Electrical Wiring Options: Consult factory.
Chicago Plenum: SUFFIX **C**.

Specifications

Performance: In an installation of 2 lamp 40W luminaires in a room cavity ratio of 1, with reflectance 80% ceiling, 50% wall, 20% floor, the C.U. shall not be less than .71. To reduce glare the average brightness at 65° shall not exceed 4641 candelas per square meter. To control veiling reflections, luminaire output in the 30°-90° zone shall not be less than 74.0%.
Materials: Chassis parts are die-formed code gauge steel.
Lamp Shield: 22 gauge steel perforated mesh lamp shield with white acrylic overlay.

Specifications (continued)

Finish: Chassis exterior – baked white post painted acrylic enamel. **Cavity** – baked white post painted acrylic enamel. **Reflector** – baked white post painted acrylic enamel, minimum 86% reflectance. Phosphate undercoating. **Lamp Shield** – baked flat white acrylic enamel.
Electrical: Thermally protected class "P" ballast C.B.M. approved, non PCB. If K.O. is within 3" of ballast, use wire suitable for at least 90°.
UL Listed for damp locations.
Labels: I.B.E.W./UL and ULc Listed.

Job Information **Type:**

Lightolier a Genlyte company www.lightolier.com
Technical Information: (978) 657-7600 • Fax (978) 658-0595
631 Airport Road, Fall River, MA 02720 • (508) 679-8131 • Fax (508) 674-4710
We reserve the right to change details of design, materials and finish.
© 2005 a Genlyte company

LIGHTOLIER®

Coffaire II Recessed Fluorescent **CFH2GPF232 or 332**

Direct/Indirect – 2' x 4' with Perforated Basket
Air Return/Static, 2 Lamp or 3 Lamp T8

Features

- Direct/indirect lamp shield appearance.
- Perforated mesh lamp shield with white acrylic overlay.
- Contoured body and ends.
- Air return models meet UL 1598, Paragraph 9.2.2.5 requirements.
- 63.8% efficient (2 lamp).
- 60.2% efficient (3 lamp).
- Spacing to mounting ratio 1.4 (2 lamp).
- Spacing to mounting ratio 1.3 (3 lamp).
- Only 5" deep.
- Tension bars secure ends to body.
- Same fixture fits both G and T ceiling.
- Fits flush to face of slot grid (T) ceiling.
- Static models have injection molded light stop at basket ends.
- Perforated lamp shield hinges from either side.
- Ballast accessible from room side.
- Can be continuous row mounted.
- Wiring access plate standard.
- Construction to meet NYC Code or Chicago Plenum requirement is available.

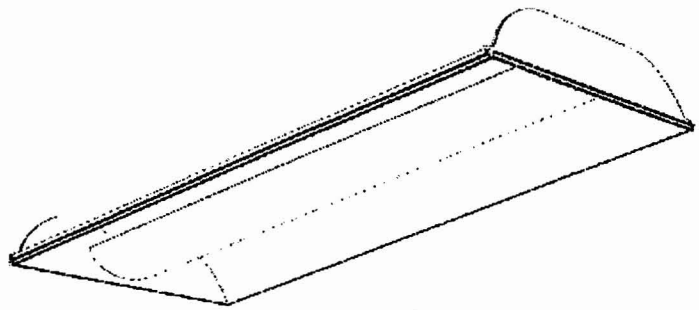

Mounting Methods

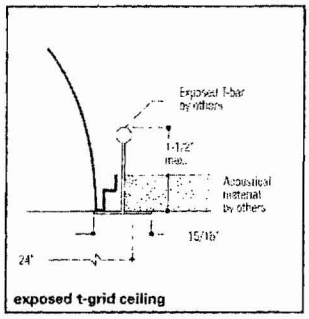

exposed t-grid ceiling

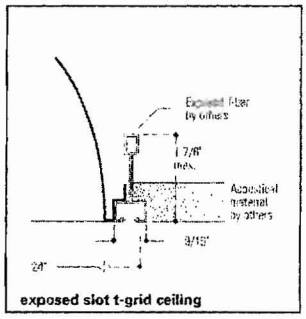

exposed slot t-grid ceiling

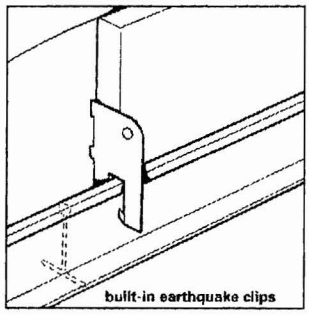
built-in earthquake clips

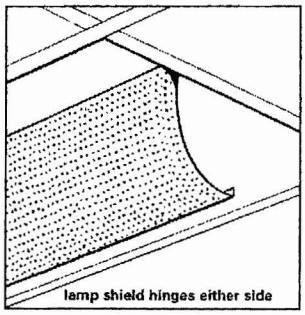
lamp shield hinges either side

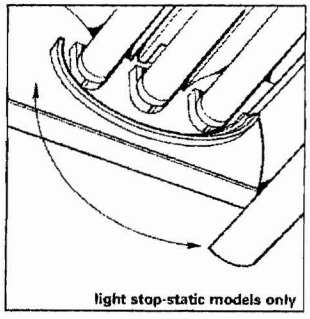
light stop-static models only

Dimensions

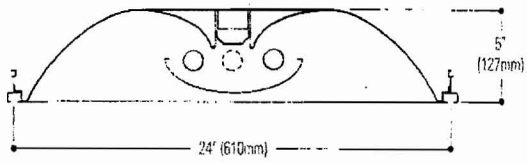

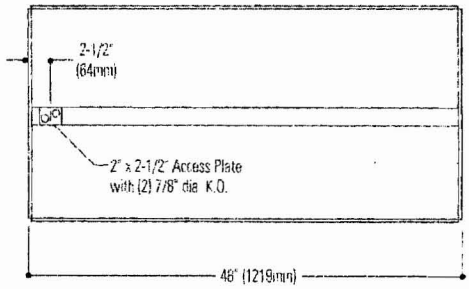

Job Information	**Type:**
Job Name:	'B'
Cat. No.:	
Lamp(s):	
Volts/Ballast:	

Lightolier a Genlyte company www.lightolier.com
Technical Information: (978) 657-7600 • Fax (978) 658-0595
631 Airport Road, Fall River, MA 02720 • (508) 679-8131 • Fax (508) 674-4710
We reserve the right to change details of design, materials and finish.
© 2005 a Genlyte company

LIGHTOLIER®

11/05

Direct/Indirect – with Perforated Basket
Air Return/Static, 2 Lamp or 3 Lamp T8

Model No. CFH2GPF232120SO

LER = FP - 54.7 IW - 58.0 BF - 0.87
Comparative yearly lighting energy cost per 1000 lumens = $4.39

Report Number: G2004255
Catalog Number: CFH2GPF232120SO
Lamps: F32/T8 TL841
Luminaire: Coffaire II with perforated basket
Ballast: Triad B2321UNV-HP, 58 watts
Report is based on 2850 Lumens per lamp.
Efficiency: 63.8%

CIE Type-Direct-Indirect

Plane:	0-Deg	90-Deg
Spacing Criteria:	1.2	1.4
Shielding Angles:	90	90
Plane:	0-Deg	90-Deg
Luminous Length:	46.920	22.920

CANDELA DISTRIBUTION

	0.0	45.0	90.0	FLUX
0	1179	1179	1179	
5	1172	1174	1176	112
15	1120	1135	1151	321
25	1023	1067	1105	492
35	899	972	1031	606
45	742	851	931	651
55	565	705	794	618
65	357	526	614	504
75	175	308	243	281
85	37	43	47	52
90	0	0	0	

COEFFICIENTS OF UTILIZATION – ZONAL CAVITY METHOD. EFFECTIVE FLOOR CAVITY REFLECTANCE 0.20

RC	80			50			30		
RW	70	50	30	50	30	10	50	30	10
1	69	66	63	62	60	58	59	58	56
2	63	57	53	54	50	47	52	49	46
3	57	50	45	47	43	39	45	42	39
4	52	44	38	42	37	33	40	36	33
5	48	39	33	37	32	29	36	32	28
6	44	35	29	33	29	25	32	28	25
7	41	32	26	30	25	22	29	25	22
8	38	29	23	28	23	19	27	23	19
9	35	27	21	25	21	18	25	20	17
10	33	25	19	24	19	16	23	19	16

LUMINANCE DATA IN CANDELA/SQ. METER

AVERAGE IN DEG.	AVERAGE 0-DEG.	AVERAGE 45-DEG.	AVERAGE 90-DEG.
45	1512.	1734.	1897
55	1394.	1771.	1994.
65	1217	1800.	2093.
75	974	1715.	1353.
85	612.	711	777.

ZONAL LUMEN SUMMARY

ZONE	LUMENS	% LAMP	% FIXT
0- 30	925	16.2	25.4
0- 40	1531	26.9	42.1
0- 60	2800	49.1	77.0
0- 90	3636	63.8	100.0
90-180	0	0.0	0.0
0-180	3636	63.8	100.0

Model No. CFH2GPF332120O3

LER = FP - 50.7 IW - 85 BF - 0.88
Comparative yearly lighting energy cost per 1000 lumens = $4.73

Report Number. G2004256
Catalog Number: CFH2GPF332120O3
Lamps: F32T8 TL841
Luminaire: Coffaire II with perforated basket
Ballast. SYL QT3X32T8 120, 89.0 watts
Report is based on 2850 Lumens per lamp.
Efficiency: 60.2%

CIE Type-Direct-Indirect

Plane:	0-Deg	90-Deg
Spacing Criteria:	1.2	1.3
Shielding Angles:	90	90
Plane:	0-Deg	90-Deg
Luminous Length:	46.920	22.920

CANDELA DISTRIBUTION

	0.0	45.0	90.0	FLUX
0	1733	1733	1733	
5	1722	1725	1729	164
15	1645	1668	1693	472
25	1507	1563	1613	720
35	1316	1412	1483	879
45	1076	1213	1310	930
55	801	993	1083	863
65	504	712	809	682
75	244	394	335	369
85	51	58	63	72
90	0	0	0	

COEFFICIENTS OF UTILIZATION – ZONAL CAVITY METHOD. EFFECTIVE FLOOR CAVITY REFLECTANCE 0.20

RC	80			50			30		
RW	70	50	30	50	30	10	50	30	10
1	66	63	60	59	57	55	56	55	53
2	59	54	50	51	48	45	49	46	44
3	54	48	43	45	41	38	43	40	37
4	49	42	37	40	35	32	38	35	31
5	45	37	32	36	31	27	34	30	27
6	42	34	28	32	27	24	31	27	24
7	39	30	25	29	24	21	28	24	21
8	36	28	23	27	22	19	26	22	19
9	34	25	20	24	20	17	24	20	17
10	32	23	19	23	18	15	22	18	15

LUMINANCE DATA IN CANDELA/SQ. METER

AVERAGE IN DEG.	AVERAGE 0-DEG.	AVERAGE 45-DEG.	AVERAGE 90-DEG.
45	2192.	2472.	2669
55	2012.	2469.	2720.
65	1718.	2427.	2758.
75	1358.	2193.	1865.
85	843.	959.	1041.

ZONAL LUMEN SUMMARY

ZONE	LUMENS	% LAMP	% FIXT
0- 30	1356	15.9	25.3
0- 40	2235	26.1	43.4
0- 60	4027	47.1	78.2
0- 90	5150	60.2	100.0
90-180	0	0.0	0.0
0-180	5150	60.2	100.0

Ordering Information

Explanation of Catalog Number. Example: CFH2GPF232120SO

[ ]	[ ]	2	G	P	F	[ ]	32	[ ]	[ ]	[ ]
Coffaire II: Direct/ Indirect: Recessed with Perforated Mesh Shield	**Body Style:** **S** = Static **H** = Air Return	**Fixture Width**	**Ceiling Type:** Fits both Standard Grid and Slot Grid	**Perforated Lamp Shield**	**Flat White Reflector**	**Lamp Quantity** **2**=2 Lamp **3**=3 Lamp	**Lamp:** (By Others) **32**=T8 (Nominal 48")	**Voltage:** 120, 277 or **UNV**=120-277	**Ballast Type:**	**Options:** Add appropriate suffix to catalog no., ie: (GLR)

		<20THD	<10THD
1 or 2 Lamp Elec. T8		**SO***	**HI***
1-3 Lamp Elec. T8		**O3***	**H3***
LOL Dimming T8		**PS**	–

*Instant Start Standard
Other dimming options. Consult factory.
NOTE:
For **T8 UNV**, you must use **HI**, **H3** Ballast Code.

CF	Standard Coffaire II
CY	For NYC Code – I.B.E.W. Manufactured
CN	For NYC Code – Local 3 Manufactured

Options/Accessories

Fusing: Internal fast blow fusing: SUFFIX: **GLR**.
Internal slow blow fusing: SUFFIX: **GMF**.
Drywall Kit: Order Catalog Number: **FK92X4** and **CF4FK SPACER**.
Electrical Wiring Options: Consult factory.
Chicago Plenum: SUFFIX: **C**.

Specifications

Performance: In an installation of 2 lamp 32W luminaires in a room cavity ratio of 1, with reflectance 80% ceiling, 50% wall, 20% floor, the C.U. shall not be less than .66. To reduce glare the average brightness at 65° shall not exceed 2093 candelas per square meter. To control veiling reflections, luminaire output in the 30°-90° zone shall not be less than 74.6%.
Materials: Chassis parts are die-formed code gauge steel.
Lamp Shield: 22 gauge steel perforated mesh lamp shield with white acrylic overlay.
Finish: Chassis exterior – baked white post painted acrylic enamel. **Cavity** – baked white post painted acrylic enamel. **Reflector** – baked white post painted

Specifications (continued)

acrylic enamel, minimum 86% reflectance. Phosphate undercoating **Lamp Shield** – baked flat white acrylic enamel.
Electrical: Thermally protected class "P" ballast C.B.M. approved, non PCB. If K.O. is within 3" of ballast, use wire suitable for at least 90°.
UL Listed for damp locations.
Labels: I.B.E.W./UL and ULc Listed.

Job Information **Type:**

Lightolier a Genlyte company www.lightolier.com
Technical Information: (978) 657-7600 • Fax (978) 658-0595
631 Airport Road, Fall River, MA 02720 • (508) 679-8131 • Fax (508) 674-4710
We reserve the right to change details of design, materials and finish.
© 2005 a Genlyte company

LIGHTOLIER®