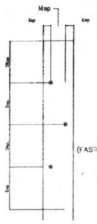

	D top	D sp	E sp.	M sp.	NAIL SIZE
2-2X4	2-1/2"	6"	1"	1-1/2"	10d
3-2X4	3-1/2"	8"	1-1/2"	1/2"	10d
2-2X6	3-1/2"	8"	1-1/2"	2-1/2"	10d
3-2X6	3-1/2"	8"	1-1/2"	2-1/2"	10d

(FASTENING INDICATED IS TO CONNECT ANY 2-PLIES TOGETHER)

NAILING PATTERN FOR BUILT-UP STUD COLUMNS — A1

NOT TO SCALE

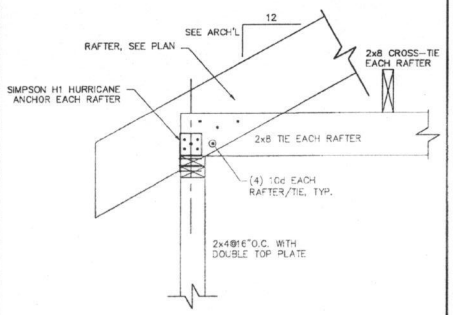

TYP. RAFTER/TIE DETAIL AT HIP ROOF — A2

NOT TO SCALE

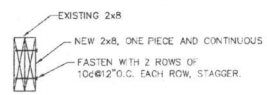

TYP. 2x8 ADDED TO EXISTING 2x8 — A3

NOT TO SCALE

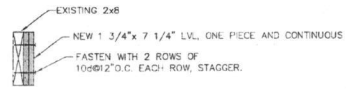

TYP. LVL ADDED TO EXISTING 2x8 — A4

NOT TO SCALE

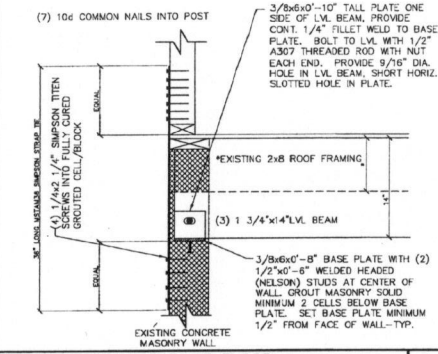

TYP. HOLDOWN DETAIL AT FLOOR — B1

NOT TO SCALE

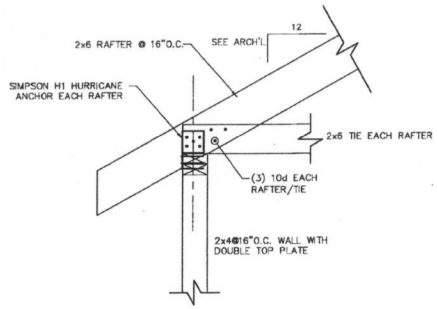

TYP. RAFTER/TIE DETAIL AT SMALL DORMER — B2

NOT TO SCALE

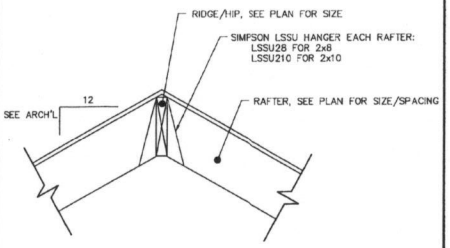

(HANGERS NOT REQUIRED AT SMALL GABLE DORMERS)

TYP. RAFTER TO RIDGE/HIP — B3

NOT TO SCALE

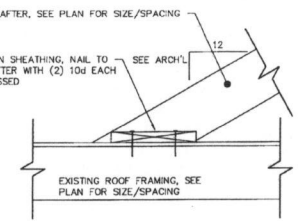

TYPICAL FLAT VALLEY DETAIL — B4

NOT TO SCALE

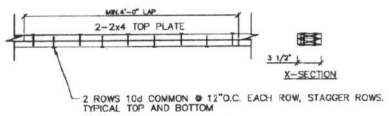

TYP. 2x4 WALL TOP PLATE LAP SPLICE DETAIL — C1

NOT TO SCALE

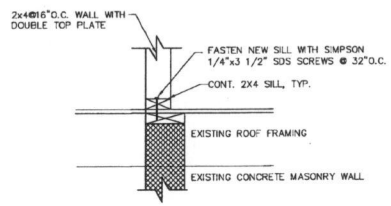

TYP. HOLDOWN DETAIL AT FLOOR — C2

NOT TO SCALE

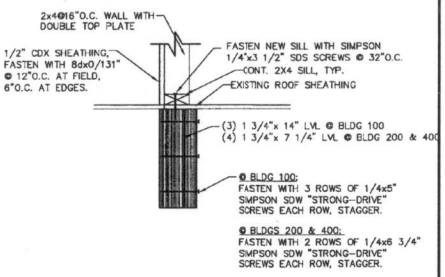

(SIMILAR AT 3-2x8 BEAM AT BLDGS 200 & 400)

NEW WALL CONNECTION TO LVL BEAM — C3

NOT TO SCALE

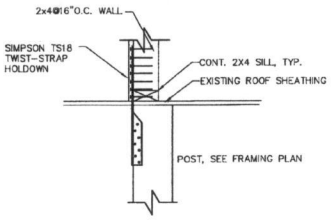

(SIMILAR AT BEAM)

TYP. HD1 HOLDOWN DETAIL — C4

NOT TO SCALE

STATE OF MAINE — STEPHEN R. GRANT — No. 6626 — LICENSED PROFESSIONAL ENGINEER

REV:	BY:	DATE:	STATUS:
1	SRG	12.21.2013	PER PORTLAND CEO COMMENTS

THIS PLAN SHALL NOT BE MODIFIED WITHOUT WRITTEN PERMISSION FROM SRG ENGINEERING, INC. ANY ALTERATIONS, AUTHORIZED OR OTHERWISE, SHALL BE AT THE USER'S SOLE RISK AND WITHOUT LIABILITY TO SRG ENGINEERING, INC.

SRG ENGINEERING INC.
STRUCTURAL ENGINEERING CONSULTANTS
P.O. BOX 205
GRAY, ME 04039
TEL: (207) 657-7323
EMAIL: SRGENGINEERING@GMAIL.COM

PROJECT NO.	CDR	DESIGN	CHKD	DRAWN
13-090	SRG	SRG	SRG	SRG

BUILDING 300: ROOF FRAMING PLAN
OF
INN AT PORTLAND
PORTLAND, MAINE
FOR
INN AT PORTLAND
PORTLAND, MAINE

DATE	SCALE
10.18.2013	AS NOTED

SHEET S5 OF 5