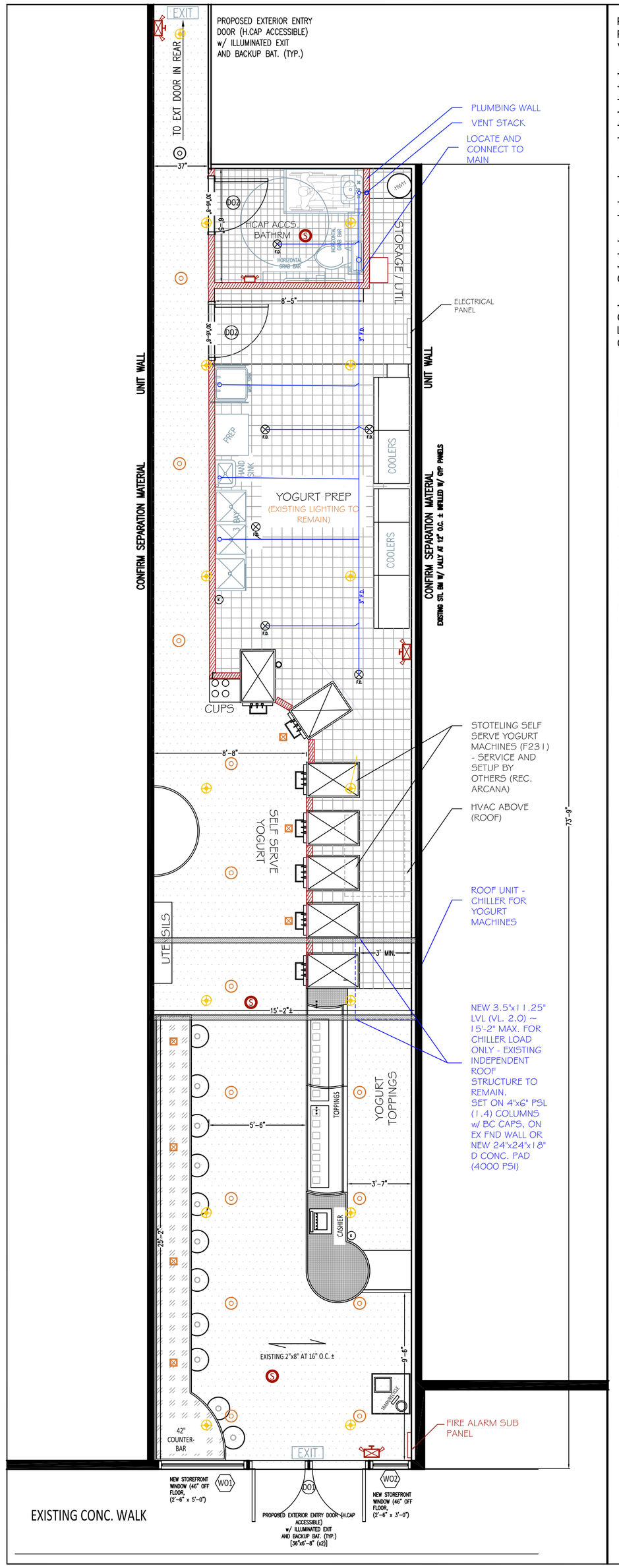

PURPOSE: TO RENOVATE EXISTING SPACE FOR PROPOSED YOGURT SHOP (YOGURT VALLEY)

-ME STATE BUILDING CODE
-2009 IBC
-2009 IEBC
-2009 IEEC
-2003 NFPA-1 (BY OTHERS)
-2003 ICC/ANSI A111-7

-TOTAL AREA:1,120± SQ.FT.

-USE GROUP A2 (LESS THAN 50 PERSONS)
-INTERIOR MODIFICATIONS ONLY (<$50,000)

-STORIES: 1
-SPRINKLER: BY OTHERS
-FIRE PROTECTION SYSTEM DESIGN BY OTHERS

-CONTRACTOR TO CONFIRM SPRINKLER OPERATION VIA. PRESSURE TEST BY LICENSED CONTRACTOR AND PROVIDE CERTIFICATION

FINISH NOTES:
INTERIOR FINISH TO COMPLY WITH IBC 801.1.1 AND 801.1.2 AND 803
INTERIOR WALL AND CEILING FINISH (SPRINKLERED)
-VERTICAL EXIT AND EXIT PASSAGEWAYS: CLASS A
-EXIT ACCESS CORRIDORS AND OTHER EXITWAYS: CLASS B
-ROOMS AND ENCLOSED SPACE (INCL STORAGE): CLASS C
INTERIOR FINISH IN VERTICAL EXITS, PASSAGEWAYS AND ACCESS CORRIDORS SHALL NOT BE LESS THAN CLASS 2
ALL DECORATIVE MATERIALS SUSPENDED FROM WALLS OR CEILINGS SHALL MEET IBC 801.1.2 AND 803

DOOR NOTES:
LATCH SIDE CLEARANCES AT ALL DOORWAYS TO BE IN ACCORDANCE WITH ICC/ANSI A177.1-2003 SCT. 404.2.3.1
ALL EXITS TO BE LABELED
ALL INTERIOR DOORS TO BE LABELED FOR USE
ALL EXTERIOR DOORS SHALL HAVE PANIC HDW
OPERATING DEVICE TO BE CAPABLE OF OPERATION WITH ONE HAND NOT REQUIRING GRASPING, PINCHING OR TWISTING OF THE WRIST
LEVER TYPE CLOSERS W/ 1/2" THRESHOLD
INTERIOR HINGE SHALL BE 5.0 # (22.2N) MAX. PER ADAAG.
LANDING REQUIRE AT ALL EXITS, 36" MIN x 44" LONG (DIR. OF TRAVEL)
NOTES:

CONTRACTOR TO FIELD VERIFY ALL CONDITIONS AND DIMENSIONS PRIOR TO ANY WORK
CONTACT ENGINEER FOR REVIEW UPON REMOVAL OF WALL SHEATHING TO VERIFY STRUCTURAL AND BUILDING CONDITIONS

CONTRACTOR SHALL COMPLY WITH ALL APPLICABLE BUILDING CODES AND RESTRICTIONS.

RESPONSIBILITY OF CONTRACTOR TO LOCATE ALL EXISTING MECHANICAL AND ELECTRICAL SERVICES SHOWN AND NOT AND PROTECT FROM DAMAGE.
CONTRACTOR SHALL BEAR COST OR ALL UTILITY CONNECTS, DISCONNECTS AND REPLACEMENTS IN CONJUNCTION WITH WORK.

ALL WORK TO CONFORM TO MANUFACTURER STANDARDS

ALL ELECTRICAL, PLUMBING, MECHANICAL AND FIRE SHALL CONFORM TO STATE AND LOCAL REQUIREMENTS, INSTALLATION TO BE PERFORMED BY LICENSED CONTRACTORS IN RESPECTIVE FIELD.

DECORATIVE MATERIALS SHALL BE NON FLAMMABLE OR FLAME PROOF AS PER FIRE CODE / MARSHALL REQUIREMENTS

MINIMUM FLAME SPREAD CLASSIFICATION OF INTERIOR FINISH SHALL CONFORM TO STATE BUILDING CODE AND LOCAL ORDINANCES

EXISTING UTILITY HOOKUPS TO BE LOCATED BY CONTRACTOR
WATER, GAS, ELECTRIC AND ASSOCIATED INFRASTRUCTURE IS ALL AVAILABLE
ALL PLUMBING, HEATING AND ELECTRICAL WORK TO BE DESIGN BUILD ON SITE
EXISTING SPRINKLERS AND FIRE ALARM PANEL TO BE CONFIRMED AND BROUGHT TO CODE ON SITE

LEGEND

- CERAMIC TILE TYPE 1
- SHEET VINYL
- COUNTER TOP
- SHEET VINYL OR CT (BY OWNER)
- FORMICA CT
- NEW PARTITION WALL
- EXISTING WALL
- FLOOR DRAIN
- RECESSED LIGHT
- PENDANT LIGHT
- CLASS "K" FIRE EXTINGUISHER (INSTALL MAX. 40" AFF. TO THE TOP OF THE HANDLE)
- EX SPRINKLER HEAD (CONFIRM/RELOC. FOR FULL COVERAGE)
- SMOKE DETECTOR
- PULL STATION W/ HORN + STROBE
- STROBE LIGHT

0 2' 4' 8'
SCALE: 1/4" = 1'-0"

YOGURT VALLEY

PROPOSED SIGNAGE (BY OTHERS)

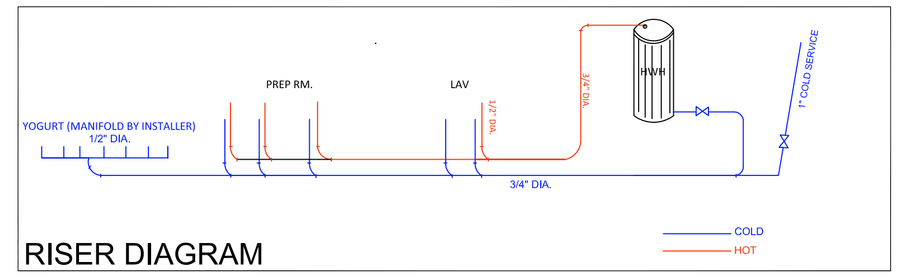

RISER DIAGRAM

DOOR SCHEDULE			
D01	36"x6'-8"(2)	EXTERIOR ENTRY DOOR (H. CAP ASSESSABLE)	SELF CLOSING +PANIC HDW
D02	36"X6'-8"	INTERIOR HINGED	SELF CLOSING
WINDOW SCHEDULE			
W01	2'-6" X 5'-0"	46" OFF FLOOR	
W02	2'-6" X 3'-0"	46" OFF FLOOR	

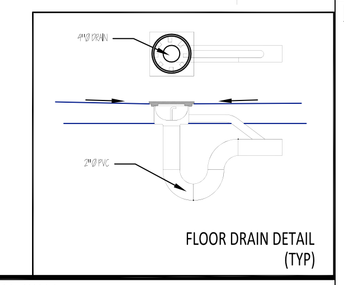

FLOOR DRAIN DETAIL (TYP)

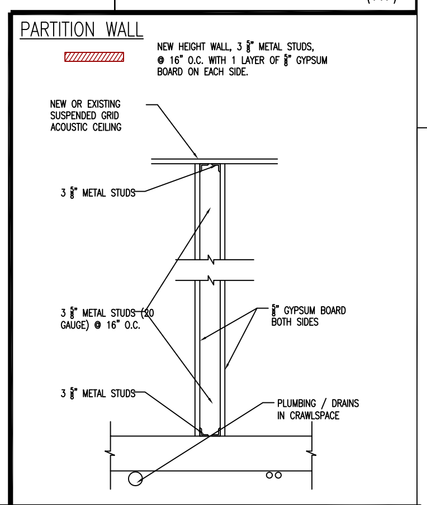

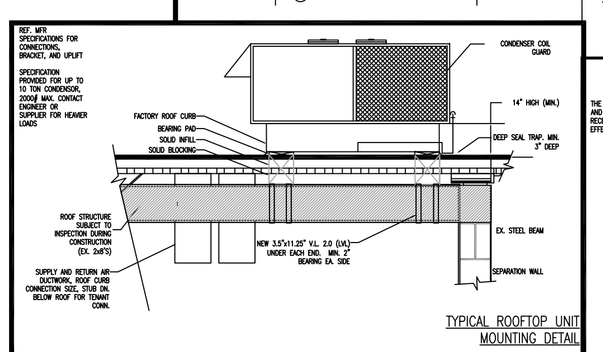

TYPICAL ROOFTOP UNIT MOUNTING DETAIL

DOOR NOTES:

1. LATCH SIDE CLEARANCES AT ALL DOORWAYS SHALL BE IN ACCORDANCE WITH ICC/ANSI A117.1–2003, SECTION 404.2.3.1.
2. ALL EXITS TO BE LABELED.
3. INTERIOR DOORS TO BE LABELED AS TO INTENDED USE.
4. ALL EXIT DOORS SHALL BE PROVIDED PANIC HARDWARE.
5. THE OPERATING DEVICE ON ALL DOORS SHALL BE CAPABLE OF OPERATION WITH ONE HAND AND SHALL NOT REQUIRE TIGHT GRASPING, TIGHT PINCHING OR TWISTING OF WRIST TO OPERATE. THE INTERIOR HINGED DOOR SHALL BE 5.0 POUNDS (22.2 N) MAXIMUM PER ANSI A117.1, SECTION 404.2.8.
6. LANDING SHALL BE PROVIDED AT EVERY REQUIRED EXIT AND THEY SHALL BE PER ICC/ANSI FIGURE 404.2.3.1
7. LANDING SHALL BE PROVIDED AT EVERY REQUIRED EXIT AND THEY SHALL BE A MINIMUM OF 36 INCHES IN WIDTH AND 44 INCHES LONG.

MECHANICAL NOTES:

1. THE CONTRACTOR SHALL EXAMINE ALL OTHER SPECIFICATIONS, DRAWING AND ALL OTHER FEATURES OF BUILDING CONSTRUCTION WHICH MAY AFFECT HIS WORK AND BE IGNORANT BY THESE SPECIFICATIONS, INCLUDING THE GENERAL CONDITIONS AND PARTICULAR INSTRUCTIONS TO ALL BIDDERS AND SUPPLIERS.
2. ALL WORK SHALL BE EXECUTED AND INSPECTED IN STRICT ACCORDANCE WITH ALL LOCAL CODES AND/ OR STATE CODES, LAWS, ORDINANCES, RULES, AND REGULATIONS APPLICABLE TO THIS PARTICULAR CLASS OF WORK, AND EACH CONTRACTOR SHALL PAY ALL FEES, RECEIVE ALL PERMITS, GIVE ALL NOTICES, PERMITS, ROYALTIES, TAXES, AND OTHER SIMILAR COST IN CONNECTION THEREWITH.
3. PRIOR TO FABRICATION OF DUCTWORK, CONTRACTOR SHALL EXAMINE AND VERIFY ALL CONDITIONS ABOVE AND BELOW THE CEILING WHICH MAY INTERFERE WITH THE DUCT SYSTEM AND NOTIFY THE ARCHITECTS OF ANY CONFLICT ENCOUNTERED. CONTRACTOR SHALL PROVIDE ALL OFFSETS ETC. WHICH MAY BE REQUIRED.
4. ALL SHEET METAL CONSTRUCTION SHALL BE IN STRICT ACCORDANCE WITH "SMACNA" LOW PRESSURE DUCT CONSTRUCTION STANDARDS.
5. ALL ROUND DUCT SHALL BE FABRICATED IN ALL BEND EXCEED 30 DEGREES.
6. ALL DUCTS SHALL BE SUPPORTED WITH 1" WIDE, 16 GAUGE GALVANIZED STEEL BANDS.
7. ALL RECTANGULAR DUCT SHALL BE INSULATED WITH A MINIMUM OF 1" INTERNAL LINER, 2 LB. DENSITY. ALL ROUND DUCT AND DIFFUSER TOP SHALL HAVE A MINIMUM OF 2" FOIL BACKED BLANKET TYPE INSULATION WITH ALL JOINTS BUTTED AND TAPPED. INSULATION "R" VALUES SHALL COMPLY WITH CONTRACTOR ENERGY EFFICIENCY REQUIREMENTS.
8. ALL DUCT DIMENSIONS SHOWN ON PLANS ARE SHEET METAL DIMENSIONS. ALLOWANCE HAS BEEN MADE FOR LINER.
9. CONTRACTOR SHALL COORDINATE LOCATION OF ALL SUPPLY AND RETURN AIR REGISTERS, DUCT, GRILLES AND DIFFUSERS WITH LIGHT AND CEILING PATTERNS.
10. ALL SUPPLY DIFFUSERS TO BE TITUS DOUBLE DEFLECTION MODEL 110A WITH OPPOSED BLADE DAMPERS AND FRAME 23 FOR LAY-IN CEILING.
11. MOUNT THERMOSTAT AT 48" MAXIMUM ABOVE THE FINISHED FLOOR.
12. PROVIDE U.L.F.S. AT ALL DUCT OR AIR DISTRIBUTION PENETRATIONS OF RATED WALLS, FLOORS OR CEILING ASSEMBLIES WITH ACCESS.
13. PROVIDE CONDENSATE DRAIN WITH TRAP AT UNITS WITH DRAIN TO OPENING BY PLUMBING CONTRACTOR. COORDINATE WITH PLUMBING CONTRACTOR.
14. ALL POWER EQUIPMENT SHALL BE PROVIDED BY ELECTRICAL CONTRACTOR AND COORDINATE ALL POWER REQUIREMENTS WITH ELECTRICAL CONTRACTOR ETC. COORDINATE WITH PLUMBING CONTRACTOR TO INSURE PROPER CONDENSATE DRAINS.
15. CONDENSING UNIT LININGS, INCLUDING ADHESIVES WHEN USED, SHALL HAVE A FLAME SPREAD INDEX NOT MORE THAN 25 AND A SMOKE-DEVELOPED INDEX NOT MORE THAN 50, WHEN TESTED IN ACCORDANCE WITH ASTM E 84. DUCT COVERINGS AND LINING SHALL NOT FUME, GLOW, SMOLDER OR SMOKE WHEN TESTED IN ACCORDANCE WITH ASTM C 411 AT THE TEMPERATURE TO WHICH THEY ARE EXPOSED IN SERVICE. THE TEST TEMPERATURE SHALL NOT FALL BELOW 250F(121°).

INDIRECT WASTE DETAILS

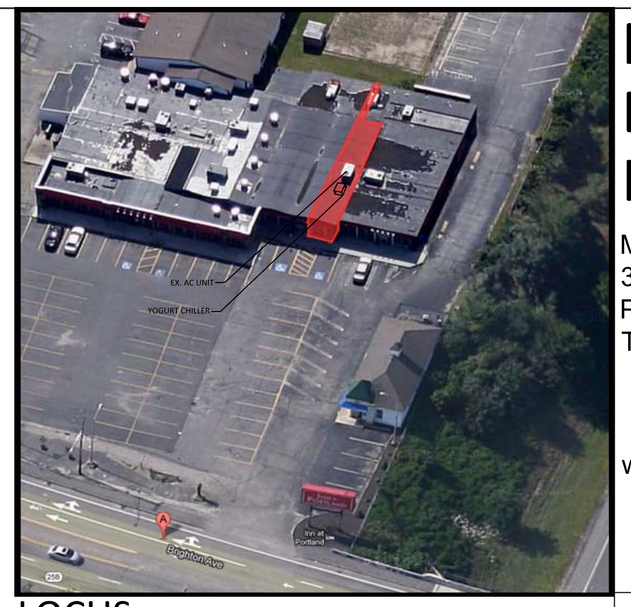

LOCUS

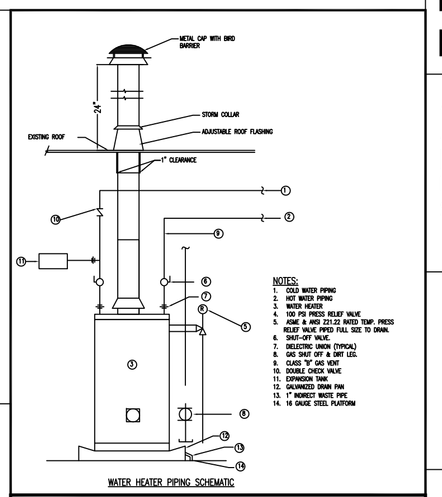

WATER HEATER PIPING SCHEMATIC

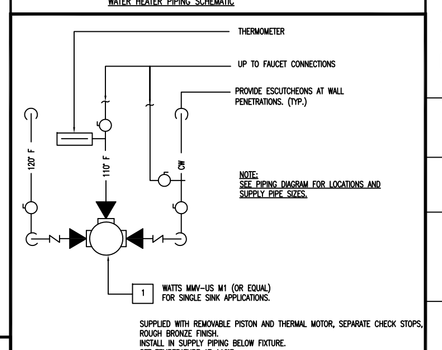

MIXING VALVE PIPING SCHEMATIC

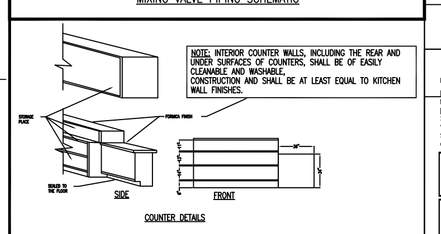

COUNTER DETAILS

PLUMBING REQUIRMENTS

1. ALL PLUMBING SHALL COMPLY WITH THE LOCAL PLUMBING & HEALTH DEPARTMENT REQUIREMENTS.
2. INSULATE ALL HOT & COLD WATER LINES ABOVE GRADE WITH 3/4" FIBERGLAS PIPE INSULATION WITH VAPOR BARRIER.
3. VERIFY ALL FINAL CONNECTIONS TO KITCHEN EQUIPMENT WITH KITCHEN SUPPLIER VERIFY ROUGH–IN REQUIREMENTS WITH SAME.
4. MATERIALS SHALL BE AS FOLLOWS:
   A. WATER PIPING TO BE TYPE 'K' COPPER BELOW GRADE, TYPE 'L' COPPER OR PVC PLASTIC ABOVE GRADE.
   B. WASTER PIPING TO BE CAST IRON OR PVC PLASTIC.
   C. VENTS TO BE CAST IRON, GALVANIZED STEEL OR PVC PLASTIC PIPE.
   D. GAS PIPING TO BE SCHEDULE 40, BLACK STEEL PIPE, PROVIDE AUTOMATIC GAS SHUT–OFF VALVE IN COOKING EQUIPMENT SUPPLY MAIN AS REQUIRED FOR COOKING EQUIPMENT FIRE PROTECTION SYSTEM. VERIFY & COORDINATE WITH KITCHEN EQUIPMENT SUPPLIER.
5. ALL INDIRECT WASTES EXCEEDING 24" IN LENGTH SHALL BE TRAPPED.
6. PROVIDE CLEAN OUTS REQUIRED & AT THE BASE OF ALL STACKS.
7. ALL MATERIALS USED WITHIN RETURN AIR PLENUMS SHALL BE APPROVED FOR SUCH USE.
8. PROVIDE FIXTURE STOPS AT ALL PLUMBING FIXTURES.
9. PROVIDE ALL FITTING & ACCESSORIES AS REQUIRED FOR A COMPLETE INSTALLATION.
10. HOT WATER SUPPLIED TO LAVATORY FIXTURES AHLL NOT EXCEED 110° F
11. HANDICAP PLUMBING FIXTURES SHALL BE INSTALLED IN ACCORDANCE WITH THE ADA REQUIREMENTS & LOCAL STARE BARRIER FREE REQUIREMENTS.
12. COORDINATE ALL WORK IN FIELD WITH ARCHITECTURAL, MECHANICAL & ELECTRICAL TRADES.
13. VERIFY ALL EXISTING JOB CONDITIONS & AS REQUIRED FOR A COMPLETE INSTALLATION.

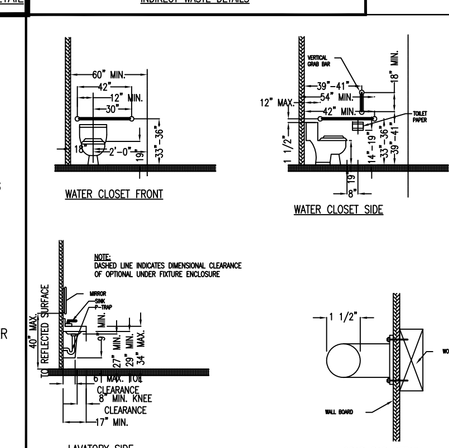

ICC/ ANSI / A117.1 REQUIREMENT NOTES

RESTROOM CONDITIONS

- TOILET PAPER DISPENSERS MUST PERMIT CONTINUOUS PAPER FLOW AND MOUNTED 14"-19" CARRIER TO FINISHED FLOOR.
- HOT WATER AND DRAIN PIPES UNDER LAVATORIES SHALL BE INSULATED OR OTHERWISE CONFIGURED TO PROTECT AGAINST CONTACT.
- THERE SHALL BE NO SHARP OR ABRASIVE SURFACES UNDER LAVATORIES.
- IF SELF CLOSING VALVES ARE USED ON FAUCETS, FAUCETS SHALL REMAIN OPEN FOR A MINIMUM OF TEN SECONDS.
- ALL STRESSES ON GRAB BARS AND COMPONENTS SHALL BE BASED ON 250 LB.
- PAPER TOWEL DISPENSER TO BE LOCATED AT A HEIGHT OF 44" ABOVE FINISHED FLOOR MAXIMUM.
- PROVIDE LOOP TYPE ACCESSIBLE DOOR HARDWARE ON TOILET STALLS.
- PROVIDE SIGNAGE ON RESTROOM DOOR ADJACENT TO LATCH SIDE OF DOOR AT 48" ABOVE FINISH FLOOR.
- USE NON GLARE FINISH GRADE 2 BRAILLE AND RAISED LETTERS (1/32").
- ALL DOORS MIN. WIDTH 2'-8" CLEAR AT 90 DEGREES OPEN.

NARRAGANSETT ENGINEERING INC.

MAIN OFFICE:
3102 EAST MAIN ROAD,
PORTSMOUTH, RI 02871
TEL : (401) 683-6630

www.nei-cds.com

COMMERCIAL INTERIOR FOR YOGURT VALLEY

YOGURTVALLEY.COM

SHEET TITLE
PROPOSED LAYOUT
FIRST FLOOR

APPLICANT:
JOHN QIAN
[JNEWCHINA@HOTMAIL.COM]
P.O. BOX. 314
SWANSEA, MA 02777

LOCATION:
1140 BRIGHTON AVE
PORTLAND, ME

PROJECT#	DATE	DRAWN	CHECK
13.0116	06.16.14	PVK	NKH

REVISIONS

NO.	DATE	DESCRIPTION	BY
01	07.30.14	PER BLDG. COMM.	NKH

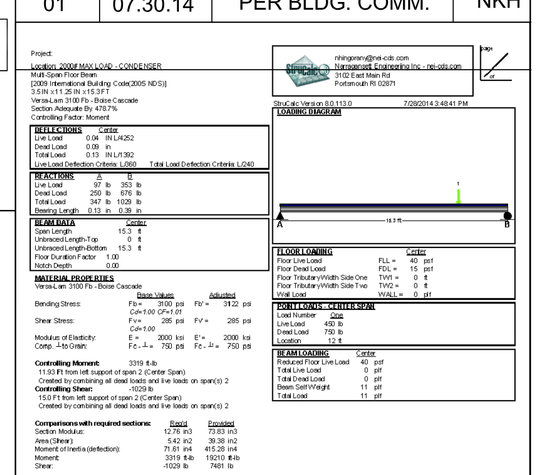

SHEET	SCALE
A101	1/4" = 1'