Reviewed for Code Compliance
Inspections Division
Approved with Conditions
Date: 10/31/17

SPECIFICATIONS

PROJECT:

HAMPTON INN & SUITES
1210 BRIGHTON AVENUE
PORTLAND, MAINE

ARCHITECT:

ARCHETYPE, P.A.
48 UNION WHARF
PORTLAND, MAINE 04101

OWNER:

PORTLAND HOTELS INC.
1200 BRIGHTON AVE.
PORTLAND, ME 04102

Resubmission to Hilton
June 27, 2016

Reviewed for Code Compliance
Inspections Division
Approved with Conditions
Date: 10/31/17

INDEX TO PROJECT MANUAL

00100 Index to Project Manual

Division 1- General Requirements

01000 Special Procedures for Hospitality Projects
01330 Submittal and Substitution Procedures
01420 Reference Standards
01450 Quality Control
01500 Temporary Facilities and Controls
01580 Project Identification
01600 Product Requirements
01720 Field Engineering
01730 Cutting and Patching
01770 Project Closeout
01780 Bonds and Warranties
01785 Project Record Documents
01790 Spare Parts
01820 Demonstration and Training
01830 Operation and Maintenance Data

Division 2- Site Work

Division 3- Concrete

03300 Cast In Place Concrete

Division 4 - Masonry

04200 Unit Masonry
04251 Thin Brick

Division 5 – Metals

05120 Structural Steel
05500 Metal Fabrications
05517 Alternating Tread Steel Stairs
05520 Handrails and Railings

Division 6 - Wood & Plastics

06100 Rough Carpentry
06175 Wood Roof Trusses

Reviewed for Code Compliance
Inspections Division
Approved with Conditions
Date: 10/31/17

06200 Finish Carpentry

Division 7 - Thermal & Moisture Protection

07100 Damproofing and Waterproofing
07200 Thermal Protection
07210 Spray Foam Insulation
07240 Exterior Insulation and Finish Systems (EIFS)
07420 Panelized Stone Veneer
07500 Roofing and Flashing
07620 Sheet Metal Flashing & Trim
07720 Roof Scuttle
07840 Firestopping
07920 Joint Sealers

Division 8 - Doors & Windows

08100 Steel Doors and Frames
08110 Automatic Sliding Doors
08210 Wood Doors
08211 Door Cut Sheets
08220 Sliding Panel Doors
08310 Access Doors and Panels
08410 Aluminum Storefront
08600 Windows
08710 Door Schedule
08800 Glazing

Division 9 – Finishes

09250 Gypsum Board
09260 Gypsum Board Assemblies on Metal Framing
09265 Gypsum Board Shaft Wall Assemblies
09300 Tiling
09512 Acoustical Tile Ceilings
09900 Painting
09910 Interior Painting
09960 High Performance Coatings

Division 10 – Specialties

10260 Wall and Corner Guards
10400 Signage
10520 Fire Protection Specialties
10670 Metal Storage Shelving

Reviewed for Code Compliance
Inspections Division
Approved with Conditions
Date: 10/31/17

10800 Toilet, Bath, and Laundry Accessories
Gas Fireplace Brochure
Cooling and Heating Unit Cut sheet

Division 11 – Equipment

11521 Motorized Front Projection Screens
11523 Motorized Projector Lifts

Division 13 – Special Construction

13152 Swimming Pools – Indoor

Division 14 - Conveying System

14240 Hydraulic Elevators
14560 Laundry and Linen Chutes

Division 21-28 – Mechanical & Electrical

21 13 13 Sprinklers
22 00 00 Plumbing
23 00 00 HVAC
23 05 00 General Mechanical
23 05 93 Testing and Balancing
23 07 00 Insulation
23 09 00 Controls
23 00 00 Ductwork and Accessories
26 00 00 General Electrical
26 05 19 Low Voltage Electrical Power Conductors
26 05 26 Grounding and Bonding for Electrical Systems
26 05 33 Raceways and Boxes for Electrical Systems
26 05 53 Identification for Electrical Systems
26 09 24 Lighting Control Devices
26 19 00 Supporting Devices
26 27 26 Wiring Devices
26 47 00 Panelboards
26 51 00 Interior Lighting
26 71 00 Communications Equipment Room Fittings
27 15 00 Communications Horizontal Cabling
27 52 23 Aid Call System
28 32 11 Digital Addressable Fire Alarm System

END OF SECTION

Reviewed for Code Compliance
Inspections Division
Approved with Conditions
Date: 10/31/17

SECTION 01000 - SPECIAL PROCEDURES FOR HOSPITALITY PROJECTS

PART 1 GENERAL

1.01 SUMMARY

A. Section Includes:

1. These Special Requirements contain changes and additions to the General Conditions and other Contract Documents. Where any Article or paragraph is modified or voided by these Special Requirements, the unaltered provisions shall remain in effect. In any case of conflict, these Special Requirements shall prevail.

B. Related Documents:

1. Drawings and Articles of the Contract, including General and Supplementary Conditions and Division 01 Specification Sections, apply to work of this Section.

2. All Contractors shall be governed by all applicable Sections of these Documents with reference to their respective areas of work. It shall be the responsibility of the Construction Manager/Design-Builder to apprise its Subcontractors and suppliers of these requirements.

a. The Construction Manager/Design-Builder and each Subcontractor shall review all Sections of the Specifications and all Drawings and are responsible for all work pertaining to their trade regardless of Drawing or Section of Specifications it is written in.

1.02 GENERAL

A. The Construction Manager/Design-Builder and each Subcontractor affirmatively represents that they are skilled and experienced in the performance of work as required by this project and in the use and interpretation of Drawings and Specifications such as those included in the Contract Documents; that they have carefully reviewed the Drawings and Specifications of this project; and that their Contract is based solely on these Documents, not relying in any way on any explanation or interpretations - oral or written - from any other source. The Subcontractor agrees that it shall be conclusively presumed that the Subcontractor has exercised his aforementioned skill and experience and found the Drawings and Specifications sufficient and free from ambiguities, errors, or omissions for the purpose of determining its Contract for the performance of the work in conformity with the Drawings, Specifications, and all other Contract Documents.

B. Each Subcontractor shall provide sufficient and adequate labor, materials and construction equipment necessary to properly correlate all phases of the work to the end that the approved Progress Schedule can be adhered to and the Substantial Completion Date met.

C. Each Subcontractor is responsible for all necessary development of the work to fulfill the intent of the Contract Documents for a complete and/or functioning system whether totally defined by the Drawings and Specifications or not.

D. In no case shall any Subcontractor proceed with work in uncertainty.

1.03 COMMUNICATIONS

A. The Subcontractor shall forward all communications to the Owner through the Construction Manager/Design-Builder.

B. Request for Information (RFI) and Supplemental Instructions:

1. It shall be the Subcontractor's obligation to check the Contract Documents and to request of the Construction Manager/Design-Builder any clarification necessary and in time so as not to delay the progress of the work.

Reviewed for Code Compliance
Inspections Division
Approved with Conditions
Date: 10/31/17

1.04 RELATIONS WITH ADJOINING PROPERTY OWNERS

A. To facilitate his work, the Construction Manager/Design-Builder and/or Subcontractor m choose to make necessary arrangements for use and subsequent rehabilitation of the adjoining Owner's property. Such arrangements are to be coordinated through the Construction Manager/Design-Builder. Communication for this is the Subcontractor's responsibility.

B. If work is required off-site, outside the Contract limit lines, or on property of others, such areas shall be restored by said Subcontractor to their original condition, or as required by local authorities, immediately following completion of the work.

1.05 ACCESS TO SITE AND BUILDING

A. Access and security of the project site are the responsibility of the Construction Manager/Design-Builder Contractor and not that of the Owner or the Owner's Representative.

1.06 EXAMINATION OF THE SITE

A. All Subcontractors submitting proposals for this work shall first examine the site and all conditions thereon. All proposals shall take into consideration all such conditions as may affect the work under this Contract.

1.07 GRADES, LINES, LEVELS, AND SURVEYS

A. Verify all grades, lines, levels, and dimensions as shown on the Drawings, and report any errors or inconsistencies discovered in the above to the Owner through the Construction Manager/Design-Builder before commencing work. Provide and maintain established bench marks in not less than two widely separated places.

1.08 FIELD MEASUREMENTS

A. The Subcontractor shall take measurements in the field to verify or supplement dimensions indicated on Drawings and shall be responsible for accurate fit of specified work. Any discrepancy between the Drawings and the actual conditions shall be reported immediately to the Owner through the Construction Manager/Design-Builder.

B. Tolerances: The Subcontractor shall be responsible to maintain dimensions for spaces requiring close tolerances for such items as equipment or fixtures by "grounding" such locations. Uneven surfaces and joints will not be accepted which prevent the installation of units whose dimensions are shown in the documents.

1.09 USE OF SITE

A. Material Delivery and Storage

1. It shall be the responsibility of the Subcontractor to direct all deliveries to the construction site through the Construction Manager/Design-Builder and not the Architect, the Owner's Representative, or the Owner.

B. The Subcontractor shall exercise control over all trucks and equipment using public roads and the Owner's property to preclude spillage, tracking of dirt or debris thereon. Should spillage occur, that Subcontractor is held to promptly clean and remove same.

1.10 PROTECTION

A. The Subcontractor shall provide and maintain guard lights for all work at all barricades, railings, obstructions in the streets, roads, or sidewalks, and at all trenches or pits. Remove such work when directed after necessity for same ceases.

1. The Subcontractor is responsible for all required OSHA temporary protection and barricades necessary for the completion of his work.

B. The Subcontractor will be held responsible for all of his work and materials provided for by the Plans and Specifications until the work is completed and accepted.

Reviewed for Code Compliance
Inspections Division
Approved with Conditions
Date: 10/31/17

1. The Subcontractor shall:
   a. Provide temporary protection for installed products. Control traffic in immediate area to minimize damage.
   b. Prohibit traffic and storage on waterproofed and roofed surfaces and on lawn and landscaped areas.
   c. Clean and repair damage caused by installation or use of temporary facilities.
   d. Provide temporary fencing and barricades specific to the scope of work being performed.

C. Weather Protection
   1. The Subcontractor shall at all times provide protection against weather -- rain, wind, storms, frost, or heat -- so as to maintain his work, materials, apparatus, and fixtures free from injury or damage. At the end of the day's work, all work likely to be damaged shall be covered.
   2. During cold weather, the Subcontractor shall protect the work from damage. If low temperatures make it impossible to continue operations safely in spite of cold weather precautions, the Subcontractor shall cease work.
   3. Any work damaged by failure to provide above protection shall be removed and replaced with new work at the Subcontractor's expense.

D. Dust Control and Partitions
   1. The Subcontractor is responsible to completely control dust during the performance of his work, including any and all necessary measures such as dust enclosures, proper ventilation, etc. This also includes dust control during operations on the part of the Subcontractor in which services are provided by others. This cost is the responsibility of the Subcontractor.
   2. The Subcontractor shall provide and remove upon completion all required weather and necessary dust-proof partitions, including doors, at locations required to phase the work, and as directed by the Construction Manager/Design-Builder.

E. Noise Control:
   1. Subcontractor shall minimize noise as required.

F. Water Control:
   1. The Subcontractor shall provide, operate, and maintain pumps or other equipment necessary to drain his work. Keep excavation pits, trenches and ditches, including the entire subgrade, free of any water under any circumstances that may arise.

1.11 FIRE REGULATIONS AND EXTINGUISHERS

A. The Construction Manager/Design-Builder is responsible for fire extinguishers and fire protection for the Construction Management office trailers, storage sheds, and building requirements as required by OSHA regulations.

B. The Subcontractor is responsible for fire extinguishers and fire protection for all work, equipment, office, sheds, etc., as required by OSHA regulations specific to their scope of work.

C. Free access shall be maintained at all times from the street to fire hydrants and to outside connections for standpipes. Fire doors shall be installed and in operation at the earliest possible time.

Reviewed for Code Compliance
Inspections Division
Approved with Conditions
Date: 10/31/17

D. Where existing exits occur, they shall be fully maintained at all times and shall be kept f from materials, equipment, or other obstructions.

E. Combustible materials shall not be stored in the building.

F. The use of wood scaffolding shall be kept to a minimum and entirely eliminated when possible in order to eliminate fire hazards from this source. No part of the building where forms are in place shall be used for the storage of flammable materials of any kind. Temporary structures of combustible material shall be located not less than 30 feet from the building.

G. No smoking or use of tobacco in any form shall be permitted within the building or on the roof surfaces at any time during or after construction.

1.12 HAZARDOUS MATERIALS

A. The Construction Manager/Design-Builder and all Subcontractors shall comply with all laws concerning hazardous materials. Hazardous material shall be disposed of in a legal manner. MSDS sheets for hazardous materials shall be filed at the Contractor's job site office and as otherwise required by law.

PART 2 PRODUCTS

Not Used

PART 3 EXECUTION

Not Used

END OF SECTION

Reviewed for Code Compliance
Inspections Division
Approved with Conditions
Date: 10/31/17

SECTION 01330 - SUBMITTAL AND SUBSTITUTION PROCEDURES

PART 1 GENERAL

1.01 SUMMARY

A. Section Includes:

1. Wherever possible throughout the Contract Documents, the minimum acceptable quality of workmanship and materials has been defined either by manufacturer's name and catalog number or reference to recognized industry standards.
2. To ensure that the specified products are furnished and installed in accordance with the design intent, procedures have been established for advance submittal of design data for its review and approval or rejection by the Owner and/or Hilton Worldwide.
3. This Section specifies administrative and procedural requirements for submittals required for performance of the work, including:
   a. Contractor's Progress Schedule
   b. Shop Drawings, Product Data, and Samples
   c. Letters of Conformance
   d. Certificates
   e. Manufacturer Installation Instructions
4. Substitution Procedures
5. Manuals
6. Miscellaneous Submittals

B. Related Documents:

1. Letter of Conformance Form
2. Subcontractor’s Substitution Request Form

C. Related Sections:

1. Contractual Requirements for Submittals: General Conditions
   a. Two (2) copies of all Submittals, plus number of copies to be returned to Subcontractor, shall be submitted unless otherwise specified.
   b. Provide additional copies as required for use in Project Record Documents.
2. Section 01 77 00 (01770) - Contract Closeout
3. Individual Submittals Required: Pertinent Sections of these Specifications.

1.02 SUBMITTALS

A. Coordination: Coordinate preparation and processing of Submittals with performance of construction activities. Transmit each Submittal sufficiently in advance of performance of related construction activities to avoid delay.

1. Refer to General Conditions, Article 16, for additional requirements.
2. Coordinate each Submittal with fabrication, purchasing, testing, delivery, other Submittals and related activities that require sequential activity.

Reviewed for Code Compliance
Inspections Division
Approved with Conditions
Date: 10/31/17

3. Coordinate transmittal of different types of Submittals for related elements of the work processing will not be delayed by the need to review Submittals concurrently coordination.
   a. The Owner and/or Hilton Worldwide reserves the right to withhold action on a Submittal requiring coordination with other Submittals until related Submittals are received.
   b. No extension of Contract Time will be authorized because of failure to transmit Submittals to the Owner through the Construction Manager/Design-Builder sufficiently in advance of the work to permit processing.

B. Deliver Submittals to the Owner through the Construction Manager/Design-Builder.

C. Submittal Preparation: Place a permanent label or title block on each Submittal for identification. Indicate the name of the entity that prepared each Submittal on the label or title block.
   1. Provide a space approximately 10" x 10" on the label or beside the title block on Shop Drawings to record the Contractor's and review and approval markings and the action taken.
   2. Include the following information on the label for processing and recording action taken:
      a. Project Name
      b. Name of the Owner
      c. Date
      d. Name and Address of Construction Manager/Design-Builder
      e. Name and Address of Subcontractor or Vendor
      f. Location Where Item is to be Used
      g. Name of Manufacturer
      h. Drawing Number and Detail References, as Appropriate
      i. Certification by the Subcontractor

D. Submittal Transmittal: Package each Submittal appropriately for transmittal and handling. Transmit each Submittal from Subontractor to Owner through the Construction Manager/Design-Builder. Submittals received from sources other than the Construction Manager/Design-Builder will be returned without action.
   1. Transmit each submittal to the Construction Manager/Design-Builder with “AIA Document G810 - Transmittal Letter” and "Letter of Conformance".
   2. Sequentially number the transmittal form. Revise submittals with original number and a sequential alphabetic suffix.
   3. Identify Project, Construction Manager/Design-Builder, Subcontractor or supplier; pertinent drawing and detail number, and specification section number, as appropriate.
   4. On the transmittal, record relevant information and requests for data. On the form, or separate sheet, record deviations from Contract Document requirements, including minor variations and limitations. Include Subcontractor's certification that information complies with Contract Document requirements.
   5. After Construction Manager/Design-Builder, Owner’s and Hilton Worldwide review of Submittal, revise and resubmit as required, identifying changes made since previous Submittal.

Reviewed for Code Compliance
Inspections Division
Approved with Conditions
Date: 10/31/17

6. When re-submittal is required for any reason, transmit under new letter of transmit indicating by reference to a previous Submittal that this is a re-submittal.
    a. Identify on submittal all changes made since previous submission.
7. Distribute copies of reviewed Submittals to concerned persons. Instruct recipients to promptly report any inability to comply with provisions.
8. All Submittals shall bear the stamp of approval of the Subcontractor submitting same as evidence that they have been checked by him, or they will be rejected.
    a. Must be signed or initialed certifying that review, verification of Products required, field dimensions, adjacent construction Work, and coordination of information, is in accordance with the requirements of the Work and Contract Documents.
9. Schedule submittals to expedite the Project, and deliver to Owner through the Construction Manager/Design-Builder. Coordinate submission of related items. Instruct parties to promptly report any inability to comply with provisions.

1.03 PROGRESS SCHEDULES

A. Submit initial Construction Progress Schedule in duplicate within 15 days after date of Construction Manager/Design-Builder and Owner Contract. Submit in the form required by the General Conditions of the Contract.

B. Revise and resubmit as required.

C. Submit revised schedules with each Application for Payment, identifying changes since previous version.

1.04 LETTERS OF CONFORMANCE

A. Letter of Conformance: Short-form informational submittals which are to be used instead of shop drawings, product data and samples. They are also to be used to supplement shop drawings, product data and samples. A sample "Letter of Conformance" is located at the end of this Section. Use copies of this form for each submittal unless a more specific Letter of Conformance is located at the end of a particular Specification Section.

B. Within 30 days after date of Construction Manager/Design-Builder and Subcontractor Agreement, submit all Letters of Conformance indicating Subcontractor's selections for products proposed for use, with name of manufacturer, trade name, and model number of each product. For products specified only by reference standards, give manufacturer, trade name, model or catalog designation, and reference standards.

C. Procedure:

1. Submit the number of copies [one] which the Construction Manager/Design-Builder requires, plus [two] copies which will be retained by the Owner, and [one] copy to be retained by Hilton Worldwide.
2. Submit completed Letter of Conformance for products selected as indicated within each Section.
3. Fill-in required information on form and sign in ink by person authorized to sign on behalf of the Subcontractor.
4. Clearly identify applicable products, characteristics, models, and options. Attach supplemental information including product data to each Letter of Conformance as necessary to communicate all information specific to the product.
5. No modifications to form permitted.
6. Letters of Conformance are not to be used for substitution requests.

Reviewed for Code Compliance
Inspections Division
Approved with Conditions
Date: 10/31/17

D. By submitting a Letter of Conformance, Subcontractor declares that the product identified manufacturer's name and model number:

1. Is one of the product(s) specified
2. Is suitable for the intended use as defined within the Contract Documents, and
3. Will be provided and placed in operational condition in accordance with the Contract Documents and manufacturer's published instructions.

1.05 SHOP DRAWINGS

A. Where Shop Drawings are required, submit newly prepared information drawn to accurate scale. Highlight, encircle, or otherwise indicate deviations from the Contract Documents. Do not reproduce Contract Documents or copy standard information as the basis of Shop Drawings. Standard information prepared without specific reference to the Project is not considered Shop Drawings.

B. Shop Drawings shall be drawn at a scale to clearly indicate all of the above conditions and allow for corrections or modifications which the Construction Manager/Design-Builder may wish to make. The Construction Manager/Design-Builder shall be the sole judge as to the acceptability of manufacturer's literature and catalog sheets as Shop Drawings.

C. Shop Drawings shall clearly indicate all dimensional data for all parts of the item; types and materials for all connections; finishes; the exact relation of the item to adjacent materials and equipment in the completed structure including clearance, any necessary isolation, and fastening methods and devices; and mechanical and electrical connections.

D. Shop Drawings include fabrication and installation Drawings, setting diagrams, schedules, patterns, templates, and similar Drawings. Include the following information:

1. Dimensions
2. Identification of Products and Materials Included
3. Compliance with Specified Standards
4. Notation of Coordination Requirements
5. Notation of Dimensions Established by Field Measurement

E. Sheet Size: Except for templates, patterns, and similar full-size Drawings, submit Shop Drawings on sheets at least 8-1/2" x 11", but no larger than 36" x 48".

F. Submit in the form of one reproducible transparency and one opaque reproduction, or three opaque reproductions plus required amount to be returned to Subcontractor plus one electronic copy in pdf format. After review, reproduce and distribute to appropriate parties.

G. Do not permit Shop Drawing copies, without an appropriate final "Action" marking by the Construction Manager/Design-Builder, to be used in connection with the work.

H. The Contractors shall be responsible for distribution of additional prints to vendors, etc.

1.06 PRODUCT DATA

A. Where Product Data is required, collect Product Data into a single submittal for each element of construction or system. Product Data includes printed information such as manufacturer's installation instructions, catalog cuts, standard color charts, roughing-in diagrams and templates, standard wiring diagrams and performance curves. Where Product Data must be specially prepared because standard printed data is not suitable for use, submit as "Shop Drawings."

Reviewed for Code Compliance
Inspections Division
Approved with Conditions
Date: 10/31/17

1. Mark each copy to show applicable choices and options. Where printed Product D includes information on several products, some of which are not required, mark copies indicate the applicable information. Include the following information:
   a. Manufacturer's Printed Recommendations
   b. Compliance with Recognized Trade Association Standards
   c. Compliance with Recognized Testing Agency Standards
   d. Application of Testing Agency Labels and Seals
   e. Notation of Dimensions Verified by Field Measurement
   f. Notation of Coordination Requirements
   g. Type and Model Numbers
2. Do not submit Product Data until compliance with requirements of the Contract Documents has been confirmed.

B. Distribution: Furnish copies of final Submittal to installers, subcontractors, suppliers, manufacturers, fabricators, and others required for performance of construction activities. Show distribution on transmittal forms.
   1. Do not proceed with installation until a copy of Product Data applicable is in the installer's possession.
   2. Do not permit use of unmarked copies of Product Data in connection with construction.

1.07 SAMPLES

A. Where Samples are required, submit full-size, fully fabricated Samples cured and finished as specified and physically identical with the material or product proposed. Samples include partial sections of manufactured or fabricated components, cuts or containers of materials, full color-range sets, and swatches showing color, texture, and pattern.
   1. Mount, display, or package Samples in the manner specified to facilitate review of qualities indicated. Include the following:
      a. Generic Description of the Sample
      b. Sample Source
      c. Product Name or Name of Manufacturer
      d. Compliance with Recognized Standards
      e. Availability and Delivery Time
   2. Colors:
      a. General: Unless the precise color and pattern is specifically described in the Contract Documents, whenever a choice of color or pattern is available in a specified product, submit accurate color charts and pattern charts to the Construction Manager/Design-Builder for his review and selection.
   3. Submit Samples for review of kind, color, pattern, and texture for a final check of these characteristics with other elements and for a comparison of these characteristics between the final Submittal and the actual component as delivered and installed.
      a. Where variation in color, pattern, texture, or other characteristics are inherent in the material or product represented, submit multiple units (not less than 3) that show approximate limits of the variations.

Reviewed for Code Compliance
Inspections Division
Approved with Conditions
Date: 10/31/17

b. Refer to other Specification Sections for requirements for Samples that illustr workmanship, fabrication techniques, details of assembly, connections, operati and similar construction characteristics.

c. Refer to other Sections for Samples to be returned to the Subcontractor for incorporation in the work. Such Samples must be undamaged at time of use. On the transmittal, indicate special requests regarding disposition of Sample Submittals.

4. Preliminary Submittals: Where Samples are for selection of color, pattern, texture, or similar characteristics from a range of standard choices, submit a full set of choices for the material or product.

a. Preliminary Submittals will be reviewed and returned with the Construction Manager/Design-Builder's mark indicating selection and other action.

5. Maintain sets of Samples, as returned, at the Project site for quality comparisons throughout the course of construction.

a. Unless noncompliance with Contract Document provisions is observed, the Submittal may serve as the final Submittal.

b. Sample sets may be used to obtain final acceptance of the construction associated with each set.

B. Distribution of Samples: Prepare and distribute additional sets to Subcontractors, manufacturers, fabricators, suppliers, installers, and others as required for performance of the work.

1. Field Samples specified in individual Sections are special types of Samples. Field Samples are full-size examples erected on site to illustrate finishes, coatings, or finish materials and to establish the standard by which the work will be judged.

a. Comply with submittal requirements to the fullest extent possible. Process transmittal forms to provide a record of activity.

1.08 CERTIFICATES

A. When specified in individual specification sections, submit certification by manufacturer to Construction Manager/Design-Builder, in quantities specified for Product Data.

B. Indicate material or Product conforms to or exceeds specified requirements. Submit supporting reference data, affidavits, and certifications as appropriate.

C. Certificates may be recent or previous test results on material or Product, but must be acceptable to Construction Manager/Design-Builder.

1.09 MANUFACTURER INSTALLATION INSTRUCTIONS

A. When specified in individual specification sections, submit printed instructions for delivery, storage, assembly, installation, start-up, adjusting, and finishing to Construction Manager/Design-Builder.

B. Indicate special procedures, perimeter conditions requiring special attention, and special environmental criteria required for application or installation.

PART 2 PRODUCTS

2.01 SUBSTITUTIONS

A. Source Limitations: To the greatest extent possible for each unit of work, provide products, materials, or equipment of a singular generic kind from a single source.

Reviewed for Code Compliance
Inspections Division
Approved with Conditions
Date: 10/31/17

B. Compatibility of Options: Where more than one choice is available as options Subcontractor's selection of a product or materials, select an option which is compatible w other products and materials already selected (which may have been from among options for those other products and materials). Total compatibility among options, if not assured by limitations within contract documents, must be provided by Subcontractor. Compatibility is a basic general requirement of product/material selections.

C. Approval Required:

1. In addition to the following, refer to the General Conditions, Article 4, for additional requirements.

2. The Contract is based on the materials, equipment, and methods described in the Contract Documents.

3. The Contract Drawings and Specifications establish the "minimum standard of quality" each product and/or system must meet to be considered acceptable. Products of other manufacturers will be considered if the product and/or system meets or exceeds the "minimum standard of quality" established by the Contract Documents.

4. The Owner will consider proposals for substitutions under the "or approved substitution" and the "or approved equal" provision of materials, equipment, and methods, only when such proposals are accompanied by full and complete technical data and all other information required by the Owner and Construction Manager/Design-Builder to evaluate the proposed substitutions.

   a. It will be the responsibility of the submitting Subcontractor to prove equality.

   b. Request must include “Subcontractor’s Substitution Request” Form, a copy of which is attached to this Section.

   c. The Submittal shall include a line-by-line, item-by-item description of the specified and proposed product.

5. Requests for substitutions must be submitted to the Owner through the Construction Manager/Design-Builder NO later than 30 days after date of Construction Manager/Design-Build Agreement.

6. DO NOT SUBSTITUTE MATERIALS, EQUIPMENT, OR METHODS UNLESS SUCH SUBSTITUTIONS HAVE BEEN SPECIFICALLY APPROVED FOR THIS WORK IN WRITING.

D. "Or Approved Equal" or "Or Approved Substitution"

1. Where the phrase "or approved equal" or "approved substitution" occurs in the Contract Documents, do not assume that material, equipment, or methods will be approved as equal by the Owner, Hilton Worldwide and Construction Manager/Design-Builder unless the item has been specifically approved for this work by the Owner.

   a. Color choices will be one of the determining factors for approval.

2. The decision of the Owner and Hilton Worldwide will be final.

E. Availability of Specified Items:

1. Verify prior to bidding that all specified items will be available in time for installation during orderly and timely progress of the work.

2. In the event specified item or items will not be so available, so notify the Owner through the Construction Manager/Design-Builder prior to the receipt of Bids.

Reviewed for Code Compliance
Inspections Division
Approved with Conditions
Date: 10/31/17

3. Costs of delay caused on non-availability of specified items, when such delays co have been avoided by the Subcontractor, will be back-charged as necessary and sl not be borne by the Owner.

F. Whenever the Subcontractor secures approval for changing any items and such change involves a corresponding change or adjustment in any adjacent or related item, the responsibility for making the required change, or seeing that it is made, rests with the Subcontractor. The cost of these changes and/or adjustments shall be paid for by the Subcontractor unless it is otherwise agreed, in writing, at the time the change is approved. The acceptance of any change will not, in any way, relieve the Subcontractor from full compliance with the Contract Documents.

2.02 MANUALS

A. General: Where Manuals are required to be submitted covering items included in this work, prepare all such Manuals in durable plastic binders approximately 8-1/2 x 11 inches in size with at least the following:

1. Identification on or readable through the front cover stating the general nature of the Manual.
2. Neatly typewritten index near the front of the Manual furnishing immediate information as to location of all emergency data regarding the installation.
3. Complete instructions regarding operating and maintenance of all equipment involved.
4. Complete nomenclature of all replaceable parts, their part numbers, current cost, and name and address of nearest vendor of parts.
5. Copy of all guarantees and warranties issued.
6. Copy of approved Shop Drawing(s) with all data concerning all changes made during construction

2.03 MISCELLANEOUS SUBMITTALS

A. Inspection and Test Reports Not Performed by Owner: Classify each inspection and test report as being either "Shop Drawings" or "Product Data" depending on whether the report is specially prepared for the project or a standard publication of workmanship control testing at the point of production. Process inspection and test reports accordingly.

PART 3 EXECUTION

3.01 COORDINATION OF SUBMITTALS

A. Refer to General Conditions, Article 16, for additional requirements.

B. General: Prior to submittal for Construction Manager/Design-Builder's's review, use all means necessary to fully coordinate all material, including the following:

1. Secure all necessary approvals from public agencies and others. Signify by stamp or other means that all required approvals have been obtained.
2. Clearly indicate all deviations from the Contract Documents.

C. The Construction Manager/Design-Builder shall submit a prioritized tabulation by date of Submittals required during the first 90 days of construction. List those Submittals required to maintain orderly progress of the work, and those required early because of long lead time for manufacture or fabrication.

1. These dates may be shown on Construction Project Schedule at Subcontractor's option.

Reviewed for Code Compliance
Inspections Division
Approved with Conditions
Date: 10/31/17

3.02 TIMING OF SUBMITTALS

A. General

1. Make all Submittals enough in advance of scheduled dates for installation to provide all required time for reviews for securing necessary approvals, for possible revision and Resubmittals, and for placing orders and securing delivery.

2. In scheduling, allow a minimum of fourteen (14) full calendar days for the Construction Manager/Design-Builder's initial review following receipt of the Submittals. Allow additional time if the Construction Manager/Design-Builder requires coordination with subsequent Submittals.

   a. The Construction Manager/Design-Builder reserves the right to withhold action on a submittal requiring coordination with other submittals until all related Submittals are received.

   b. If an Intermediate Submittal is necessary, process the same as the initial Submittal. Allow fourteen (14) calendar days for reprocessing each Submittal.

Reviewed for Code Compliance
Inspections Division
Approved with Conditions
Date: 10/31/17

LETTER OF CONFORMANCE

PROJECT: _____ PROJECT NO.: _____

CITY: _____ STATE: _____

CONTRACTOR: _____

The following product(s) has been selected for use in the above referenced project from the list of specified items.

Section Number: _____ Section Name: _____

Drawing Number(s): _____ Detail Number(s): _____

SPECIFIED ITEM TO BE USED:

_____

_____

_____

Statement of Conformance:

This Letter of Conformance is provided as a Submittal for Information in accordance with Section 01 33 00 - Submittals and Substitutions. The undersigned hereby declares that the Product identified above by manufacturer's name and model number is (one of) the product(s) specified and is suitable for the intended use as defined within the Contract Documents and will be provided and placed in operational condition in accordance with the manufacturer's published instructions and the Contract Documents.

SUBCONTRACTOR/SUPPLIER:

_____ Phone Number: ( ) _____
(Contact name of subcontractor/supplier offering above product)

_____
(Subcontractor / Supplier name and address)

CONTRACTOR:

_____ _____
(Contact name of Contractor) (Contractor signature and Title of Signatory)

Reviewed for Code Compliance
Inspections Division
Approved with Conditions
Date: 10/31/17

CONTRACTOR'S SUBSTITUTION REQUEST

(Use separate form for each request)

Date: _____ Request No.: _____

TO: [Architect] [Owner's] _____
Phone: _____ Fax: _____

PROJECT: _____ Project No.: _____
CONTRACTOR _____

SPECIFIED ITEM: _____
Section: _____ Page: _____ Paragraph: _____ Description: _____
Drawing Number(s): _____ Detail Number(s): _____
The undersigned request consideration of the following:
PROPOSED SUBSTITUTION: _____

REASON FOR NOT GIVING PRIORITY TO SPECIFIED ITEMS: _____

SAVINGS or CREDIT to OWNER for ACCEPTING SUBSTITUTE: $ _____

Attached data includes description, Specifications, Drawings, photographs, performance and test data adequate for evaluation of the request; applicable portions of the data are clearly identified.

Attached data also includes a description of changes to the Contract Documents that the proposed substitution will require for its proper installation.

The undersigned certifies that the following paragraphs, unless modified by attachments, are correct:

1. Proposed substitution has been fully checked and coordinated with the Contract Documents.
2. The proposed substitution does not affect dimensions shown on Drawings.
3. The proposed substitution does not require revisions to mechanical or electrical work.
4. The undersigned will pay for changes to the building design, including architectural and engineering design, detailing, and construction costs caused by the requested substitution.
5. The proposed substitution will have no adverse affect on other trades, the construction schedule, or specified warranty requirements.
6. Maintenance and service parts will be locally available for the proposed substitution.

The undersigned further states that the function, appearance, and quality of the proposed substitution are equivalent or superior to the specified item.

Attachments: The attached data is furnished herewith for evaluation of the proposed substitution.
☐ Catalog ☐ Drawings ☐ Samples ☐ Reports ☐ Tests ☐ Other: _____

Submitted by:

_____ _____
(Firm) (Authorized Legal Signature)

_____ ( ) _____
(Address) (Telephone)

For use by the Architect: ☐ Accepted ☐ Accepted as Noted ☐ Rejected: Submit Specified Item

BY: _____
(Authorized Signature)

Date: _____ Remarks: _____

END OF SECTION

Reviewed for Code Compliance
Inspections Division
Approved with Conditions
Date: 10/31/17

SECTION 01420 - REFERENCE STANDARDS

PART 1 GENERAL

1.01 SUMMARY

A. Section Includes:

1. Reference Standards

1.02 QUALITY ASSURANCE

A. Conflicting Requirements: Where compliance with two or more standards is specified and the standards establish different or conflicting requirements for minimum quantities or quality levels, comply with the most stringent requirement. Refer uncertainties and requirements that are different, but apparently equal, to the Architect for a decision before proceeding.

1. Minimum Quantity or Quality Levels: The quantity or quality level shown or specified shall be the minimum provided or performed. The actual installation may comply exactly with the minimum quantity or quality specified, or it may exceed the minimum with reasonable limits. To comply with these requirements, indicated numeric values are minimum or maximum, as appropriate, for the context of the requirements. Refer uncertainties to the Construction Manager/Design-Builder for a decision before proceeding.

1.03 INDUSTRY STANDARDS

A. Reference Standards

1. Conform with the provisions or standards referenced in the sections of the Specifications with the same force and effect as if the Standards referenced were bound or copied directly into the section, except that:

a. Conform with more stringent provisions when contained elsewhere in the Contract Documents; and

b. Conform with the more stringent provision when two or more Standards are referenced; and

c. Conform with the more stringent provision when the Standard referenced and the governing regulations differ unless the governing regulation require conformance to the less stringent provision without exception.

2. Submit for clarification and conform to the decision of the Architect when the Standard referenced:

a. Presents options which have not specifically been selected in the Contract Documents; or

b. Contain provisions which conflict with other provisions in the Contract Documents; or

c. It is uncertain or not clear which of differing provisions is the more stringent.

3. Conform to the provisions of the most recent issue of the Standard referenced as of the date of the Contract Documents.

B. Abbreviations and Acronyms of Organizations

1. Abbreviations and Names: Trade association names and titles of general standards are frequently abbreviated. Where abbreviations and acronyms are used in the Specifications or other Contract Documents, they mean the recognized name of the trade association, standards-producing organization, authorities having jurisdiction, or other entity applicable to the context of the text provision. Refer to Gale Research's "Encyclopedia of Associations" or Columbia Books' "National Trade and Professional Associations of the U.S.," which are available in most libraries.

2. The names, addresses, and telephone numbers given in the List of Organizations are subject to change and are believed to be, but are not assured to be, accurate and up to date as of the issue date of this Section.

3. List of Organizations: Certain Standards issued by the following organizations may be referenced in the Specifications. Copies may be obtained from the issuing organization.

Reviewed for Code Compliance
Inspections Division
Approved with Conditions
Date: 10/31/17

AA	Aluminum Association 900 19th St., NW, Suite 300 Washington, DC 20006	(202) 862-5100 www.aluminum.org
ABC	Associated Air Balance Council 1518 K St., NW, Suite 503 Washington, DC 20005	(202) 737-0202 www.aabchg.com
AAMA	American Architectural Manufacturer's Association 1827 Walden Office Sq., Suite 104 Schaumburg, IL 60173	(847) 303-5664 www.aamanet.com
AASHTO	American Association of State Highway and Transportation Officials 44 North Capitol St., Suite 225 Washington, DC 20001	(202) 624-5800 www.aashto.ore
ACI	American Concrete Institute P.O. Box 9094 Fumington Hills, MI 48333-9094	(248) 848-3700 www.aci-int.org
ACPA	American Concrete Pipe Association 222 West Las Colinas Blvd., Suite 641 Irving, TX 75039-5423	(972) 506-7216 www.concrete-pipe.org
ADC	Air Diffusion Council 11 South LaSalle St., Suite 1400 Chicago, IL 60603	(312) 201-0101
AGA	American Gas Association 1515 Wilson Blvd. Arlington, VA 22209	(703) 841-8400 www.aga.com
AHA	American Hardboard Association 1210 W. Northwest Hwy Palatine, IL 60067-1897	(847) 934-8800
AHAM	Association of Home Appliance Manufacturers 20 N. Wacker Dr., Suite 1500 Chicago, IL 60606	(312) 984-5800 www.aham.org
AI	Asphalt Institute Research Puk Dr. P.O. Box 14052 Lexington, KY 40512-4052	(606) 288-4960 www.asphaltinstitute.org
AIA	The American Institute of Architects 1735 New York Ave., NW Washington, DC 20006-5292	(202) 626-7300 www.aia.org
AIA	American Insurance Association 1130 Connecticut Ave., NW, Suite l000 Washington, DC 20036	(202) 828-7100
AISC	American Institute of Steel Construction One East Wacker Dr., Suite 3100 Chicago, IL 60601-2001	(800) 644-2400
AISI	American Iron and Steel Institute 1101 17th St., NW Washington, DC 20036-4700	(202) 452-7100 www.steel.org

Reviewed for Code Compliance
Inspections Division
Approved with Conditions
Date: 10/31/17

ALI	Associated Laboratories, Inc. P.O. Box 152837 1323 Wall St. Dallas, TX 75315	(214) 565-0593
ALSO	American Lumber Standards Committee P.O. Box 210 Germantown, MD 20875	(301) 972-1700
AMCA	Air Movement and Control Association International, Inc. 30 W. University Dr. Arlington Heights, IL 60004-1893	(847) 394-0150 www.amca.org
ANSI	American National Standards Institute 11 West 42nd St., 1 3rd Floor New York, NY 10036-8002	(212) 642-4900 www.amsi.org
APA	APA-The Engineered Wood Association (Formerly: American Plywood Association) P. O. Box 11700 Tacoma, WA 98411-0700	(206) 565-6600 www.apawood.org
APA	Architectural Precast Association P.O. Box 08669 Fort Myers, FL 33908-0669	(941) 454-6989
ARI	Air-Conditioning and Refrigeration Institute 4301 Fairfax Dr., Suite 425 Arlington, VA 22203	(703) 524-8800 www.ari.org
ASA	Acoustical Society of America 500 Sunnyside Blvd. Woodbury, NY 11797	(516) 576-2360
ASC	Adhesive and Sealant Council 1627 K St., NW, Suite 1000 Washington, DC 20006-1707	(202) 452-1500
ASCE	American Society of Civil Engineers World Headquarters 1801 Alexander Bell Dr. Reston, VA 20191-4400	(800) 548-2723 (703) 295-6000 www.asce.org
ASHRAE	American Society of Heating, Refrigerating and Air-Conditioning Engineers 1791 Tullie Circle, NE Atlanta, GA 30329-2305	(800) 527-4723 (404) 636-8400 www.ashrae.org
ASLA	American Society of Landscape Architects 4401 Connecticut Ave., NW, 5th Floor Washington, DC 20008-2369	(202) 686-2752 www.asla.org
ASME	American Society of Mechanical Engineers 345 East 47th St. New York, NY 10017-2392	(800) 434-2763 (212) 705-7722 www.asme.org
ASPE	American Society of Plumbing Engineers 3617 Thousand Oaks Blvd., Suite 210 Westlake Village, CA 91362-3649	(805) 495-7120
ASSE	American Society of Sanitary Engineering	(216) 835-3040

Reviewed for Code Compliance
Inspections Division
Approved with Conditions
Date: 10/31/17

	28901 Clemens Rd. Westlake, OH 44145	www.asse-plumbing.org
ASTM	American Society for Testing and Materials 100 Barr Harbor Dr. West Conshohocken, PA 19428-2959	(610) 832-9500 www.astrn.org
AWI	Architectural Woodwork Institute 1952 Isaac Newton Sq. Reston, VA 20190	(703) 733-0600 www.awinet.org
AWPA	American Wood Preservers' Association 3246 Fall Creek Hwy, Suite 1900 Grubury, TX 76049-7979	(817) 326-6300
AWS	American Welding Society 550 NW Leleune Rd. Miami, FL 33126	(800) 443-9353 (305) 443-9353 www.amweld.org
AWWA	American Water Works Association 6666 W. Quincy Ave. Denver, CO 80235	(800) 926-7337 (303) 794-7711 www.awwa.org
BHMA	Builders Hardware Manufacturers Association 355 Lexington Ave., 17th Floor New York, NY 10017-6603	(212) 661-4261
BIA	Brick Institute of America 11490 Commerce Park Dr. Reston, VA 22091-1525	(703) 620-0010 www.bia.org
CAGI	Compressed Air and Gas Institute c/o Thomas Associates, Inc. 1300 Sumner Ave. Cleveland, OH 441 15-2851	(216) 241-7333 www.taol.com/cagi
CGA	Compressed Gas Association 1725 Jefferson Davis Hwy, Suite 1004 Arlington, VA 22202-4102	(703) 412-0900 www.cganet.com
CISPI	Cast Iron Soil Pipe Institute 5959 Shallowford Rd., Suite 419 Chattanooga, TN 37421	(423) 892-0137
CPPA	Corrugated Polyethylene Pipe Association 432 N. Superior St. Toledo, OH 43604	(800) 510-2772 (419) 241-2221
CRI	Carpet and Rug Institute 310 S. Holiday, Ave. Dalton, GA 30722-2048	(800) 882-8846 (706) 278-3176 www.carpet-rug.com
CRSI	Concrete Reinforcing Steel Institute 933 N. Plum Grove Rd. Schaumburg, IL 60173-4758	(847) 517-1200 www.crsi.org
CTI	Ceramic Tile Institute of America 12061 West Jefferson Blvd. Culver City, CA 90230-6219	(310) 574-7800
DHI	Door and Hardware Institute (Formerly: National Builders Hardware Association) 14170 Newbrook Dr. Chantilly, VA20151-2223	(703) 222-2010 www.dhi.org

Reviewed for Code Compliance
Inspections Division
Approved with Conditions
Date: 10/31/17

DIPRA	Ductile Iron Pipe Research Association 245 Riverchase Pkwy East, Suite O Birmingham, AL 35244	(205) 988-9870
EIA	Electronic Industries Association 2500 Wilson Blvd. Arlington, VA 22201	(703) 907-7500
EIMA	EIFS Industry Members Association 402 N. Fourth St., Suite 102 Yakima, WA 98901-2470	(800) 294-3462 (509) 457-3500 www.eifsfacts.com
EJMA	Expansion Joint Manufacturers Association 25 N. Broadway Tarrytown, NY 10591-3201	(914) 332-0040
FCI	Fluid Controls Institute c/o Thomas Associates, Inc. 1300 Sumner Ave. Cleveland, OH 441 15-2851	(216) 241-7333 www.taol.com/fci
FCICA	Floor Covering Installation Contractors Association (Formerly: Floor Covering Installation Bond) P.O. Box 948 Dalton, GA 30722-0948	(706) 226-5488
FM	Factory Mutual Research Corporation 1151 Boston-Providence Turnpike P.O. Box 9102 Norwood, MA 02062-9102	(781) 762-4300 www.fmglobal.com
GA	Gypsum Association 810 First St., NE, Suite 510 Washington, DC 20002	(202) 289-5440 www.usg.com
GANA	Glass Association of North America (Formerly: Flat Glass Marketing Association) 3310 SW Harrison St. Topeka, KS 66611-2279	(913) 266-7013 www.glasswebsite.com
HI	Hydraulic Institute 9 Sylvam Way Pusippuny, NJ 07054-3802	(201) 267-9700
HI	Hydronics Institute Division of Gas Appliance Manufacturers Association P.O. Box 218 35 Russo Pl. Berkeley Heights, NJ 07922	(908) 464-8200 www.gamanett.org
HMA	Hardwood Manufacturers Association (Formerly: Southern Hardwood Lumber) Manufacturers Association) 400 Penn Center Blvd., Suite 530 Pittsburgh, PA 15235-5605	(412) 829-0770 www.hardwood.org
HPVA	Hardwood Plywood and Veneer Association 1825 Michael Farraday Dr. P.O. Box 2789 Reston, VA 22195-0789	(703) 435-2900 www.hpva.org

Reviewed for Code Compliance
Inspections Division
Approved with Conditions
Date: 10/31/17

ICEA	Insulated Cable Engineers Association, Inc. P.O. Box 440 South Yarmouth, MA 02664	(508) 394-4424
IEEE	Institute of Electrical and Electronics Engineers 345 E. 47th St. New York, NY 10017-2394	(800) 678-4333 (212) 705-7900 www.ieee.org
IESNA	Illuminating Engineering Society of North America 120 Wall St., 17th Floor New York, NY 10005-4001	(212) 248-5000 www.iesna.org
IIDA	International Interior Design Association 341 Merchandise Mart Chicago, IL 60654-1104	(312) 467-1950
INCE	Institute of Noise Control Engineering P.O. Box 3206, Arlington Branch Poughkeepsie, NY 12603	(914) 462-4006
ISA	ISA - International Society for Measurement and Control P.O. Box 12277 67 Alexander Dr. Research Triangle Park, NC 27709	(919) 549-9411 www.isa.org
ISS	Iron and Steel Society 410 Commonwealth Dr. Warrendale, PA 15086-7512	(412) 776-1535 www.issource.org
KCMA	Kitchen Cabinet Manufacturers Association (Formerly: National Kitchen Cabinet Association) 1899 Preston White Dr. Reston, VA 22091-4326	(703) 264-1690 www.kema.org
LGSI	Light Gage Structural Institute c/o Loseke Technologies, Inc. P.O. Box 560746 The Colony, TX 75056	(972) 625-4560
LMA	Laminating Materials Association (Formerly: American Laminators Association) 116 Lawrence St. Hillsdale, NJ 07642-2730	(201) 664-2700 www.lma.org
MBMA	Metal Building Manufacturer's Association c/o Thomas Associates, Inc. 1300 Sumner Ave. Cleveland, OH 44115-2851	(216) 241-7333 www.taol.com/mbma
MCAA	Mechanical Contractors Association of America 1385 Piccud Dr. Rockville, MD 20850-4329	(301) 869-5800
MFMA	Metal Framing Manufacturers Association (Formerly: Wood and Synthetic Flooring Institute) 401 N. Michigan Ave. Chicago, IL 60611	(312) 644-6610
MIA	Marble Institute of America 30 Eden Alley, Suite 301 Columbus, OH 43215	(614) 228-6194 www.marble-institute.com

Reviewed for Code Compliance
Inspections Division
Approved with Conditions
Date: 10/31/17

MIA	Masonry Institute of America 2550 Beverly Blvd. Los Angeles, CA 90057	(213) 388-0472 www.masonryinstitute.org
ML/SFA	Metal Lath/Steel Framing Association (A Division of the NAAMM) 8 South Michigan Ave., Suite 1000 Chicago, IL 60603	(312) 456-5590
MSS	Manufacturers Standardization Society of the Valve and Fittings Industry 127 Puk St., NE Vienna, VA 22180-4602	(703) 281-6613
NAA	National Arborist Association P.O. Box 1094 Amherst, NH 03031-1094	(800) 733-2622 (603) 673-3311 www.natlub.com
NAAMM	National Association of Architectural Metal Manuf. 8 South Michigan Ave., Suite 1000 Chicago, IL 60603	(312) 456-5590 www.gss.net/naamm
NAIMA	North American Insulation Manufacturers Assoc. (Formerly: Thermal Insulation Manufacturers Association) 44 Canal Center Plaza, Suite 310 Alexandria, VA 22314	(703) 684-0084 www.naima.org
NAPA	National Asphalt Pavement Association NAPA Building 5100 Forbes Blvd. Lanham, MD 20706-4413	(301) 731-4748

Reviewed for Code Compliance
Inspections Division
Approved with Conditions
Date: 10/31/17

NCMA	National Concrete Masonry Association 2302 Horse Pen Rd. Herndon, VA 20171-3499	(703) 713-1900 www.ncma.org
NCSPA	National Corrugated Steel Pipe Association 1255 23rd St., NW, Suite 850 Washington, DC 20037	(202) 452-1700 www.ncspa.org
NEBB	Natural Environmental Balancing Bureau 8575 Grovemont Circle Gaithersburg, MD 20877-4121	(301) 977-3698
NECA	National Electrical Contractors Association 3 Bethesda Metro Center, Suite 1100 Bethesda, MD 20814-5372	(301) 657-3110
NEI	National Elevator Industry 185 Bridge Plaza North, Suite 310 Fort Lee, NJ 07024	(201) 944-3211
NELMA	Northeastern Lumber Manufacturers Association 272 Tuttle Rd. P.O. Box 87A Cumberland Center, ME 04021	(207) 829-6901
NEMA	National Electrical Manufacturers Association 1300 N 17th St., Suite 1847 Rosslyn, VA 22209	(703) 841-3200 www.nema.org
NFPA	National Fire Protection Association One Batterymarch Park P.O. Box 9101 Quincy, MA 02269-9101	(800) 344-3555 (617) 770 3000 www.nipa.org
NHLA	National Hardwood Lumber Association P.O. Box 34518 Memphis, TN 38184-0518	(901) 377-1818 www.natlhudwood.org
NLGA	National Lumber Grades Authority #406-First Capital Pl., 960 Quayside Dr. New Westminster, BC V3M 6G2	(604) 524-2393
NPA	National Particleboard Association 18928 Premiere Court Gaithersburg, MD 20879-1569	(301) 670-0604 www.pbmdf.com
NPCA	National Paint and Coatings Association 1500 Rhode Island Ave., NW Washington, DC 20005-5597	(202) 462-6272 www.paint.org
NRCA	National Roofing Contractors Association O'Hare International Center 10255 W. Higgins Rd., Suite 600 Rosemont, IL 60018-5607	(800) 323-9545 (847) 299-9070 www.roofonline.org
NRMCA	National Ready Mixed Concrete Association 900 Spring St. Silver Spring, MD 20910	(301) 587-1400 www.mmca.org

Reviewed for Code Compliance
Inspections Division
Approved with Conditions
Date: 10/31/17

NSF	NSF International (Formerly: National Sanitation Foundation) P.O. Box 130140 Ann Arbor, MI 48113-0140	(313) 769-8010 www.nsf.org
NUSIG	National Uniform Seismic Installation Guidelines 12 Lahoma Ct. Alamo, CA 94526	(510) 946-0135
NWWDA	National Wood Window and Door Association (Formerly: National Woodwork Manuf. Association) 1400 E. Touhy Ave., G-54 Des Plaines, IL 60018	(800) 223-2301 (847) 299-5200 www.nwwda.org
PCA	Portland Cement Association 5420 Old Orchard Rd. Skokie, IL 60077-1083	(847) 966-6200 www.portcement.org
PCI	Precast/Prestressed Concrete Institute 175 W. Jackson Blvd. Chicago, IL 60604	(312) 786-0300 www.pci.org
PDCA	Painting and Decorating Contractors of America 3913 Old Lee Hwy, Suite 33-B Fairfax, VA 22030	(800) 332-7322 (703) 359-0826 www.pdca.com
PDI	Plumbing and Drainage Institute 45 Bristol Dr., Suite 101 South Easton, MA 02375	(800) 589-8956 (508) 230-3516
PEI	Porcelain Enamel Institute 4004 Hillsboro Pike, Suite 224-B Nashville, TN 37215 www.porcelainenamel.com	(615) 385-5357
PPFA	Plastic Pipe and Fittings Association 800 Roosevelt Rd., Building C, Suite 20 Glen Ellyn, IL 60137-5833	(630) 858-6540
PPI	Plastic Pipe Institute (The Society of the Plastics Industry, Inc.) 1801 K St., NW, Suite 600L Washington, DC 20006	(202) 974-5306 www.plasticpipe.org
RFCI	Resilient Floor Covering Institute 966 Hungerford Dr., Suite 12-B Rockville, MD 20850-1714	(301) 340-8580
RMA	Rubber Manufacturers Association 1400 K St., NW, Suite 900 Washington, DC 20005	(800) 220-7620 (202) 682-4800 www.rma.org
SAE	SAE International 400 Commonwealth Dr. Warrendale, PA 15096-0001 For publications: Call (412) 776-4970	(412) 776-4841
SDI	Steel Door Institute 30200 Detroit Rd. Cleveland, OH 44145-1967	(216) 889-0010

Reviewed for Code Compliance
Inspections Division
Approved with Conditions
Date: 10/31/17

SHLMA	Southern Hardwood Lumber Manufacturers Association (See HMA)	
SIGMA	Sealed Insulating Glass Manufacturers Association 401 N. Michigan Ave. Chicago, IL 60611-4267	(312) 644-6610
SJI	Steel Joist institute 3127 10th Ave., North Ext. Myrtle Beach, SC 29577-6760	(803) 626-995
SMACNA	Sheet Metal and Air Conditioning Contractors' National Association, Inc. 4201 Lafayette Center Dr. P.O. Box 221230 Chantilly, VA 20151-1209	(703) 803-2980 www.smacna.org
SPIB	Southern Pine Inspection Bureau 4709 Scenic Hwy Pensacola, FL 32504-9094	(904) 434-2611
SPRI	Formerly: Single Ply Roofing Institute 175 Highland Ave. Needham Heights, MA 02194-3034	(617) 444-0242
SSPC	Steel Structures Painting Council 40 24th St., 6th Floor Pittsburgh, PA 15222-4643	(412) 281-2331
SWRI	Sealant, Waterproofing and Restoration Institute 2841 Main Kansas City, MO 64108	(816) 472-7974
TCA	Tile Council of America 100 Clemson Rescue Blvd. Anderson, SC 29625	(864) 646-8453
TPI	Truss Plate Institute 583 D'Ono Erio Dr., Suite 200 Madison, WI 53719	(608) 833-5900
UL	Underwriters Laboratories Inc. 333 Pfingsten Rd. Northbrook, IL 60062	(800) 704-4050 (847) 272-8800 www.ul.com
WA	Wallcoverings Association 401 N. Michigan Ave. Chicago, IL 60611-4267	(312) 644-6610
WCLIB	West Coast Lumber Inspection Bureau P.O. Box 23145 Portland, OR 97281-3145	(503) 639-0651
WWPA	Western Wood Products Association Yeon Building 522 SW 5th Ave. Portland, OR 97204-2122	(503) 224-3930

Reviewed for Code Compliance
Inspections Division
Approved with Conditions
Date: 10/31/17

FEDERAL GOVERNMENT AGENCIES:

CPSC	Consumer Product Safety Commission East West Towers 4330 East-West Hwy Bethesda, MD 20814	(800) 638-2772
DOC	Department of Commerce 14th St. and Constitution Ave., NW Washington, DC 20230	(202) 482-2000
DOT	Department of Transportation 400 Seventh St., SW Washington, DC 20590	(202) 366-4000
EPA	Environmental Protection Agency 401 M St., SW Washington, DC 20460	(202) 260-2090
GSA	General Services Administration F St. and 1 8th St., NW Washington, DC 20405	(202) 708-5082
NIST	National Institute of Standards and Technology (U.S. Department of Commerce) Building 101, #AI 134, Rte. I-270 and Quince Orchid Rd. Gaithersburg, MD 20899	(301) 975-2000
OSHA	Occupational Safety End Health Administration (U.S. Department of Labor) 200 Constitution Ave., NW Washington, DC 20210	(202) 219-8148
PS	Product Standard of NBS (U.S. Department of Commerce) Government Printing Office Washington, DC 20402	(202) 512-1800
USDA	U.S. Department of Agriculture 14th St. and Independence Ave., SW Washington, DC 20250	(202) 720-8732

PART 2 PRODUCTS
Not Used

PART 3 EXECUTION
Not Used

END OF SECTION

Reviewed for Code Compliance
Inspections Division
Approved with Conditions
Date: 10/31/17

SECTION 01450 - QUALITY CONTROL

PART 1 GENERAL

1.01 SUMMARY

A. Section Includes:

1. References
2. Quality Assurance
   a. Testing Laboratory Qualifications
   b. Control of Installation
3. Tolerances
4. Inspection and Testing Laboratory Services
5. Manufacturers' Field Services and Reports

B. Related Sections:

1. Information Available to Bidders: Soil investigation data.
2. General Conditions: Inspections, testing, and approvals required by public authorities.
3. Section 01 81 10 (01810) – General Commissioning
4. Section 01 33 00 (01330) - Submittals and Substitutions: Submission of manufacturers' instructions and certificates.
5. Section 01 60 00 (01600) - Material and Equipment: Requirements for material and product quality.
6. Section 01 77 00 (01770) - Contract Closeout: Project Record Documents.
7. Individual Specification Sections: Inspections and tests required, and standards for testing.

1.02 REFERENCES

A. For Products or workmanship specified by association, trade, or other consensus standards, comply with requirements of the standard, except when more rigid requirements are specified or are required by applicable codes.

B. Conform to reference standard by date of issue current on date of Contract Documents, except where a specific date is established by code.

C. Obtain copies of standards where required by product specification sections.

D. The contractual relationship, duties, and responsibilities of the parties in Contract nor those of the Construction Manager/Design-Builder shall not be altered from the Contract Documents by mention or inference otherwise in any reference document.

E. ASTM C802 - Practice for Conducting an Interlaboratory Test Program to Determine the Precision of Test Methods for Construction.

F. ASTM C1021 - Practice for Laboratories Engaged in the Testing of Building Sealants.

G. ASTM C1077 - Practice for Laboratories Testing Concrete and Concrete Aggregates for Use in Construction and Criteria for Laboratory Evaluation.

H. ASTM C1093 - Practice for Accreditation of Testing Agencies for Unit Masonry.

I. ASTM D290 - Recommended Practice for Bituminous Mixing Plant Inspection.

Reviewed for Code Compliance
Inspections Division
Approved with Conditions
Date: 10/31/17

J. ASTM D3740 - Practice for Evaluation of Agencies Engaged in Testing and/or Inspection Soil and Rock as Used in Engineering Design and Construction.

K. ASTM D4561 - Practice for Quality Control Systems for an Inspection and Testing Agency for Bituminous Paving Materials.

L. ASTM E329 - Practice for Use in the Evaluation of Inspection and Testing Agencies as Used in Construction.

M. ASTM E543 - Practice for Determining the Qualification of Nondestructive Testing Agencies.

N. ASTM E548 - Practice for Preparation of Criteria for Use in the Evaluation of Testing Laboratories and Inspection Bodies.

O. ASTM E699 - Practice for Criteria for Evaluation of Agencies Involved in Testing, Quality Assurance, and Evaluating Building Components in Accordance with Test Methods Promulgated by ASTM Committee E6.

1.03 SUBMITTALS

A. Before start of the Work, submit testing firm name, address, and telephone number and names of full time registered Engineers, specialists, and responsible officer.

B. Submit copy of report of laboratory facilities inspection made by Materials Reference Laboratory of National Bureau of Standards during most recent inspection, with memorandum of remedies of any deficiencies reported by the inspection.

1.04 QUALITY ASSURANCE

A. Testing Laboratory Qualifications:

1. Comply with requirements of ASTM C802, ASTM C1021, ASTM C1077, ASTM C1093, ASTM D290, ASTM D3740, ASTM D4561, ASTM E329, ASTM E543, ASTM E548, and ASTM E699.

2. Laboratory: Authorized to operate in State in which Project is located.

3. Laboratory Staff: Maintain a full time registered Engineer on staff to review services.

4. Testing Equipment: Calibrated at reasonable intervals with devices of an accuracy traceable to either National Bureau of Standards or accepted values of natural physical constants.

B. Control of Installation:

1. Monitor quality control over suppliers, manufacturers, Products, services, site conditions, and workmanship, to produce Work of specified quality.

2. Comply with manufacturers' instructions, including each step in sequence.

3. Should manufacturers' instructions conflict with Contract Documents, request clarification from the Construction Manager/Design-Builder before proceeding.

4. Comply with specified standards as minimum quality for the Work except where more stringent tolerances, codes, or specified requirements indicate higher standards or more precise workmanship.

5. Perform work by persons qualified to produce workmanship of specified quality.

6. Secure products in place with positive anchorage devices designed and sized to withstand stresses, vibration, physical distortion, or disfigurement.

1.05 TOLERANCES

A. Monitor tolerance control of installed Products to produce acceptable Work. Do not permit tolerances to accumulate.

Reviewed for Code Compliance
Inspections Division
Approved with Conditions
Date: 10/31/17

B. Comply with manufacturers' tolerances. Should manufacturers' tolerances conflict w Contract Documents, request clarification from the Construction Manager/Design-Buil before proceeding.

C. Adjust products to appropriate dimensions; position before securing Products in place.

1.06 INSPECTING AND TESTING LABORATORY SERVICES

A. Except as otherwise required in the Construction Manager/Design-Builder Agreement, the Subcontractor shall appoint, employ, and pay for specified services of an independent firm to perform inspecting and testing, subject to approval of the Owner].

1. Refer to General Conditions, Articles 5 and 26, for additional requirements.

B. Employment of testing laboratory in no way relieves Subontractor of obligation to perform Work in accordance with requirements of Contract Documents.

C. The testing firm will perform inspections, tests, and other services specified in individual specification sections and as required by the Owner.

D. Inspecting, testing, and source quality control may occur on or off the project site.

E. Retesting required because of non-conformance to specified requirements shall be performed by the same testing firm on instructions by the Owner.

F. Laboratory Responsibilities:

1. Test samples of mixes submitted by Subcontractor.
2. Provide qualified personnel at site. Cooperate with Construction Manager/Design-Builder and Subcontractor in performance of services.
3. Perform specified inspecting, sampling, and testing of Products in accordance with specified standards.
4. Ascertain compliance of materials and mixes with requirements of Contract Documents.
5. Promptly notify Owner through the Construction Manager/Design-Builder and Subcontractor of observed irregularities or non-conformance of Work or Products.
6. Perform additional inspection and tests required by the Owner.
7. Attend preconstruction meetings and progress meetings.

G. Laboratory Reports: After each inspection and test, promptly submit copies of laboratory report to the Owner through the Construction Manager/Design-Builder and Subcontractor. Include the following:

1. Date issued
2. Project title and number
3. Name of inspector
4. Date and time of sampling or inspection
5. Identification of product and specifications section
6. Location in the Project
7. Type of inspection or test
8. Date of test
9. Results of tests
10. Conformance with Contract Documents
11. When requested by Owner's Consultant, provide interpretation of test results

Reviewed for Code Compliance
Inspections Division
Approved with Conditions
Date: 10/31/17

H. Limits on Testing Laboratory Authority:

1. Laboratory may not release, revoke, alter, or enlarge on requirements of Contr Documents.
2. Laboratory may not approve or accept any portion of the Work.
3. Laboratory may not assume any duties of Subcontractor.
4. Laboratory has no authority to stop the Work.

I. Subcontractor Responsibilities:

1. Deliver to laboratory at designated location, adequate samples of materials proposed to be used which require testing, along with proposed mix designs.
2. Cooperate with testing firm and personnel, and provide access to the Work. Furnish samples of materials, design mix, equipment, tools, storage, and assistance by incidental labor as requested.
3. Provide incidental labor and facilities:
   a. to provide access to Work to be tested
   b. to obtain and handle samples at the site or at source of Products to be tested
   c. to facilitate tests and inspections
   d. to provide storage and curing of test samples
4. Notify Construction Manager/Design-Builder and testing firm 24 hours prior to expected time for operations requiring services.
5. Make arrangements with testing firm and pay for additional samples and tests required for Subcontractor's use.
6. Notify laboratory sufficiently in advance of cancellation of required testing operations. Subcontractor shall be responsible to laboratory for changes due to failure to notify if requirements for testing are canceled.

1.07 MANUFACTURERS' FIELD SERVICES AND REPORTS

A. When specified in individual specification sections, require material or Product suppliers or manufacturers to provide qualified staff personnel to observe site conditions, conditions of surfaces and installation, quality of workmanship, start-up of equipment, test, adjust and balance of equipment and erection as applicable, and to initiate instructions when necessary.

B. Report observations and site decisions or instructions given to applicators or installers that are supplemental or contrary to manufacturers' written instructions.

C. Submit report in duplicate within 15 days of observation to Owner through the Construction Manager/Design-Builder for information.

PART 2 PRODUCTS

Not Used

PART 3 EXECUTION

Not Used

END OF SECTION

Reviewed for Code Compliance
Inspections Division
Approved with Conditions
Date: 10/31/17

SECTION 01500 - TEMPORARY FACILITIES AND CONTROLS

PART 1 GENERAL

1.01 SUMMARY

A. Section Includes:

1. This Section specifies temporary services and facilities, including utilities, construction and support facilities, security and protection. Provide facilities ready for use. Maintain, expand and modify as needed. Remove when no longer needed, or when replaced by permanent facilities.
2. Work of this Section shall include, but not necessarily be limited to, the following:
   a. Project/Site Conditions
   b. Use Charges
   c. Field Office and Storage Sheds
   d. Temporary Sanitary Facilities
   e. Temporary Fire Extinguishers
   f. Temporary Water
   g. Temporary Electric Power Service and Interior Lighting
   h. Temporary Telephone Service and Facsimile Service
   i. Temporary Storm and Sanitary Sewer
   j. Temporary Heating, Cooling, and Ventilation
   k. Temporary Paving
   l. Temporary Enclosures
   m. Project Identification
   n. Temporary Exterior Lighting
   o. Progress Cleaning and Waste Removal
   p. Surface and Underground Water Control
   q. Protection of Installed Work
      1) Environmental Protection
      2) Dust Control
      3) Barriers, Barricades, Warning Signs, and Lights
   r. Removal of Construction Facilities and Temporary Controls

B. Related Sections:

1. General Conditions:
   a. Refer to General Conditions for additional requirements.
2. Section 01 35 00.01 (01000) - Special Requirements
3. Section 01 11 00 (01110) - Summary of Work
4. Section 01 74 00 (01740) - Cleaning and Waste Management
5. Section 01 77 00 (01770) – Closeout Procedures

Reviewed for Code Compliance
Inspections Division
Approved with Conditions
Date: 10/31/17

1.02 QUALITY ASSURANCE

A. Regulations: Each Subcontractor shall comply with industry standards and with applica laws and regulations of authorities having jurisdiction, including but not limited to:

1. Owner's Requirements
2. Building Code Requirements
3. Health and Safety Regulations
4. Utility Company Regulations
5. Police, Fire Department, and Rescue Squad Rules
6. Environmental Protection Regulations

B. Standards: Comply with NFPA Code 241, "Building Construction and Demolition Operations", ANSI-A10 Series standards for "Safety Requirements for Construction and Demolition", and NECA Electrical Design Library "Temporary Electrical Facilities."

1. Refer to "Guidelines for Bid Conditions for Temporary Job Utilities and Services", prepared jointly by AGC and ASC for industry recommendations.
2. Trade Jurisdictions: Assigned responsibilities for installation and operation of temporary utilities are not intended to interfere with the normal application of trade regulations and union jurisdictions.
3. Electrical Service: Comply with NEMA, NECA, and UL standards and regulations for temporary electric service. Install service in compliance with National Electric Code (NFPA 70).

C. Inspections: Arrange for authorities having jurisdiction to inspect and test each temporary utility before use. Obtain required certifications and permits.

1.03 PROJECT/SITE CONDITIONS

A. Temporary Utilities: Prepare a schedule indicating dates of the implementation and termination of each temporary utility. At the earliest feasible time, when acceptable to the Owner, change over from use of the temporary service to use of the permanent service.

1. Temporary Use of Permanent Facilities: The installer of each permanent service or facility shall assume responsibility for its operation, maintenance and protection during its use as a construction service or facility prior to the Owner's acceptance, regardless of previously assigned responsibilities.

B. Conditions of Use: Keep temporary services and facilities clean and neat in appearance. Operate in a safe and efficient manner. Take necessary fire prevention measures. Do not overload facilities, or permit them to interfere with progress. Do not allow hazardous, dangerous, or unsanitary conditions, or public nuisances to develop or persist on the site.

1.04 USE CHARGES

A. General: Cost or use charges for temporary facilities are not chargeable to the Owner or the Architect. Contractor's cost or use charges for temporary services or facilities will not be accepted as a basis of claim for an adjustment in the Contract Sum or Contract Time.

B. Other entities using temporary services and facilities include, but are not limited to:

1. Other Nonprime Contractors
2. The Owner's Work Forces and Separate Contractors
3. Occupants of the Project
4. The Architect
5. The Owner’s Representative

Reviewed for Code Compliance
Inspections Division
Approved with Conditions
Date: 10/31/17

6. Testing Agencies
7. Personnel of Government Agencies

PART 2 PRODUCTS

2.01 MATERIALS

A. General: Provide new materials; if acceptable to the Owner, undamaged previously used materials in serviceable condition may be used. Provide materials suitable for the use intended.

B. Lumber and Plywood: Comply with requirements in Section 06 10 00 - Rough Carpentry.

C. Tarpaulins: Provide waterproof, fire-resistant, UL labeled tarpaulins with flame-spread rating of 15 or less. For temporary enclosures, provide translucent nylon reinforced laminated polyethylene or polyvinyl chloride fire-retardant tarpaulins.

D. Water: Provide potable water approved by local health authorities.

2.02 EQUIPMENT

A. Water Hoses: provide 3/4" heavy-duty, abrasion-resistant, flexible rubber hoses 100 ft. long, with pressure rating greater than the maximum pressure of the water distribution system; provide adjustable shut-off nozzles at hose discharge.

B. Electrical Outlets: Provide properly configured NEMA polarized outlets to prevent insertion of 110-120 volt plugs into higher voltage outlets. Provide receptacle outlets equipped with ground-fault circuit interrupters, reset button and pilot light, for connection of power tools and equipment.

C. Electrical Power Cords: Provide grounded extension cords; use "hard-service" cords where exposed to abrasion and traffic. Provide waterproof connectors to connect separate lengths of electric cords, if single lengths will not reach areas where construction activities are in progress.

D. Lamps and Light Fixtures: Provide general service incandescent lamps of wattage required for adequate illumination. Provide guard cages or tempered glass enclosures, where exposed to breakage. Provide exterior fixtures where exposed to moisture.

E. Heating Units: Provide temporary heating units that have been tested and labeled by UL, FM, or another recognized trade association related to the type of fuel being consumed.

Temporary Field Office

1. The Construction Manager/Design-Builder shall provide and maintain clean, temporary weather-tight offices at the site, in location as approved by the Owner, for the use of the Construction Manager/Design-Builder, his Subcontractors' agents and Owner and at which location he or his authorized agent shall be present, or to which either may be readily called at all times. While the work is in progress, copies of permits, approved Shop Drawings, and a complete set of Contract Drawings and Specifications marked up to date with any revisions, shall be kept at said office ready for use at all times.

   a. Provide sturdy furniture, drawing rack, and drawing display table.

2. All expenses in connection with the field office, including the installation cost, and use of heat, light, water, and janitor service shall be borne by the Construction Manager/Design-Builder.

3. Field office shall be maintained until final acceptance and then be removed by the Construction Manager/Design-Builder, no later than 15 days after acceptance of building unless the Owner orders earlier removal by them.

Reviewed for Code Compliance
Inspections Division
Approved with Conditions
Date: 10/31/17

F. Temporary Storage Sheds: Each Subcontractor shall provide and maintain such additio offices, storage sheds, and other temporary buildings or trailers on the project as required his own use. Location of sheds and trailers shall be located where directed by Construction Manager/Design-Builder.

G. Sanitary Facilities: Toilet rooms within the new building shall not be used by construction personnel. Provide sanitary facilities that include temporary toilets, wash facilities and drinking water fixtures. Comply with regulations and health codes for the type, number, location, operation, and maintenance of fixtures. Install where facilities will best serve the Project. Provide toilet tissue, paper towels, paper cups, and similar disposable materials for each facility. Provide covered waste containers for used materials.

1. Toilets: Install self-contained single-occupant toilet units of the chemical, aerated recirculation, or combustion type, properly vented and fully enclosed with a glass fiber reinforced polyester shell or similar nonabsorbent material. Use of pit-type privies will not be permitted.

2. Wash Facilities: Install wash facilities supplied with potable water at convenient locations for personnel involved in handling materials that require wash-up. Dispose of drainage properly. Supply cleaning compounds.

3. Drinking Water Facilities: Provide containerized tap-dispenser bottled-water type drinking water units.

H. First Aid Supplies: Comply with governing regulations.

I. Fire Extinguishers: Provide hand-carried, portable UL-rated, class `A' fire extinguishers for temporary offices and similar spaces. In other locations, provide hand-carried, portable, UL-rated, class `ABC' dry chemical extinguishers, or a combination of extinguishers of NFPA recommended classes for the exposures.

1. Comply with NFPA 10 and 241 for classification, extinguishing agent, and size required by location and class of fire exposure.

PART 3 EXECUTION

3.01 INSTALLATION

A. Use qualified personnel for installation of temporary facilities. Locate facilities where they serve the project adequately and result in minimum interference with performance of the work. Relocate and modify facilities as required.

B. Provide each facility ready for use when needed to avoid delay. Maintain and modify as required. Do not remove until facilities are not longer needed, or are replaced by authorized use of completed permanent facilities.

3.02 TEMPORARY UTILITY INSTALLATION

A. General: Engage the appropriate local utility company to install temporary service. Where the company provides only part of the service, provide the remainder with matching, compatible materials and equipment; comply with the company's recommendations.

1. Obtain easements to bring temporary utilities to the site, where the Owner's easements cannot be used for that purpose.

B. Water Service: Install water service connected to nearest system, and distribution piping of sizes and pressures adequate for construction until permanent water service is in use.

1. Sterilization: Sterilize temporary water piping prior to use.

C. Temporary Electric Power Service: Provide weatherproof, grounded electric power service and distribution system of sufficient size, capacity, and power characteristics during construction period. Include meters, transformers, overload protected disconnects, automatic ground-fault interrupters and main distribution switch gear.

Reviewed for Code Compliance
Inspections Division
Approved with Conditions
Date: 10/31/17

1. Temporary work shall be installed in such a manner as not to interfere with permanent construction. If such interference does occur, it shall be the responsibility the Subcontractor to make such changes as may be required to overcome the interference. The cost of these changes will be included as part of the Contract Sum.

2. The electrical work for construction purposes shall conform to all Federal and State requirements as well as the requirements of the National Electric Code and National Electrical Safety Code. The Subcontractor shall obtain required applications, permits, and inspection pertaining to this work in accordance with the General Conditions.

D. Temporary Lighting: Whenever overhead floor or roof deck has been installed, provide temporary lighting with local switching.

1. Install and operate temporary lighting that will fulfill security and protection requirements, without operating the entire system, and will provide adequate illumination for construction operations and traffic conditions.

E. Sewers and Drainage: If sewers are available, provide temporary connections to remove effluent that can be discharged lawfully. If sewers are not available or cannot be sued, provide drainage ditches, dry wells, stabilization ponds and similar facilities. If neither sewers nor drainage facilities can be lawfully used for discharge of effluent, provide containers to remove and dispose of effluent off the site in a lawful manner.

3.03 TEMPORARY CONSTRUCTION AND SUPPORT FACILITIES INSTALLATION

A. Locate field offices, storage sheds, sanitary facilities and other temporary construction and support facilities for easy access.

1. Maintain temporary construction and support facilities until near Substantial Completion. Remove prior to Substantial Completion. Personnel remaining after Substantial Completion will be permitted to use permanent facilities, under conditions acceptable to the Owner.

B. Temporary Heat: Provide temporary heat required by construction activities, for curing or drying of completed installations or protection of installed construction from adverse effects of low temperatures or high humidity. Select safe equipment that will not have a harmful effect on completed installations or elements being installed. Coordinate ventilation requirements to produce the ambient condition required and minimize consumption of energy.

1. The Construction Manager/Design-Builder shall provide heat, supplied with air, as follows:

a. At all times during normal working hours, provide sufficient heat to maintain a temperature of not less than 50 degrees F., and from 40 degrees to 50 degrees F. during periods other than specified herein below.

b. At all times during the placing, setting, and curing of concrete, provide sufficient heat to ensure heating of the spaces involved to not less than 50 degrees F.

c. Well before gypsum board work begins and continuous throughout the setting and drying periods, a temperature range between 55 and 70 degrees F. shall be maintained day and night. During this period, no finish woodwork, wood finish flooring, resilient flooring or flexible wall coverings shall be installed or stored in the buildings, and no finish painting or applying of finish wall coatings shall be undertaken.

d. For a period of ten (10) days previous to the placing of interior wood finish and throughout the placing of this and other interior finishing, varnishing, painting, etc., and until final acceptance of the work or until full occupancy by the Owner, provide sufficient heat to produce a temperature of not less than 70 degrees F.

Reviewed for Code Compliance
Inspections Division
Approved with Conditions
Date: 10/31/17

e. Heat and air shall be supplied in a manner which shall avoid the rapid drying material but thoroughly dry to such an extent that no remaining moisture will aff finish material.

f. The Construction Manager/Design-Builder shall operate the heating and ventilating systems each day, including Saturdays, Sundays, and holidays; operating shall include necessary labor and approved operating personnel in attendance as required by agencies having jurisdiction.

g. It shall be the Subcontractor's responsibility to coordinate with the Construction Manager/Design-Builder for the range of temperatures required for temporary heating, during this period, that temperature as recommended by the manufacturer of the materials as mentioned are stored in the building or being installed, and for the length of time recommended, following installation.

2. Temporary heating and ventilating equipment, piping, etc., shall be installed in such a manner as not to interfere with work of other trades or the permanent construction. If such interference does occur, it shall be the responsibility of the Subcontractor to make any changes required to overcome the interference.

3. Except as hereinafter specified, the permanent heating and ventilating systems shall not be used for temporary heat. The Subcontractor shall coordinate with the Construction Manager/Design-Builder to provide, operate, and maintain heating and ventilating units for the purposes specified. The units shall be arranged to bring in sufficient outdoor air (min. 1-1/2 air changes per hour) to ventilate the building and to prevent build-up of harmful dusts and fumes and remove excess moisture, especially to prevent damage to built-up roofing. During warm weather, the Subcontractor shall coordinate with the Construction Manager/Design-Builder to provide an adequate supply of fresh air (min. 1-1/2 air changes per hour) when necessary to properly ventilate for moisture, dust, and fumes from paints, cements, or adhesives in tightly enclosed areas where natural ventilation will not be sufficient.

C. Temporary Paving: Construct and maintain temporary roads and paving to adequately support the indicated loading and to withstand exposure to traffic during the construction period. Locate temporary paving for roads, storage areas, and parking, where the same permanent facilities will be located. Review proposed modifications to permanent paving with the Owner through the Construction Manager/Design-Builder.

D. Temporary Enclosures: Provide temporary enclosure for protection of construction from exposure, foul weather, other construction operations, and similar activities. Where heat is needed and the building enclosure is incomplete, provide enclosures where there is no other provision for containment of heat. Coordinate enclosure with ventilating and material drying or curing requirements to avoid dangerous conditions.

E. Project Identification and Temporary Signs: Prepare project identification and other signs of the size indicated; install signs where indicated to inform the public and persons seeking entrance to the project. Support on posts or framing of preservative treated wood or steel. Do not permit installation of unauthorized signs.

1. Temporary Signs: Prepare signs to provide directional information to construction personnel and visitors.

F. Temporary Exterior Lighting: Install exterior yard and sign lights so that signs are visible when work is being performed.

G. Collection and Disposal of Waste: Collect waste from construction areas and elsewhere daily. Comply with requirements of NFPA 241 for removal of combustible waste material and debris. Enforce requirements strictly. Do not hold materials more than seven (7) days during normal weather or 3 days when the temperature is expected to rise above 80 degrees F. Handle hazardous, dangerous, or unsanitary waste materials separately from other waste by containerizing properly. Dispose of material in a lawful manner.

Reviewed for Code Compliance
Inspections Division
Approved with Conditions
Date: 10/31/17

H. Stairs: Until permanent stairs are available, provide temporary stairs where ladders are adequate. Cover finished permanent stairs with a protective covering of plywood or sim material so finishes will be undamaged at the time of acceptance.

I. Surface and Underground Water Control: Grade site to drain. Maintain excavations free of water. Provide, operate, and maintain pumping equipment. Protect site from puddling or running water. Provide water barriers as required to protect site from soil erosion. Provide dewatering of site as required.

3.04 SECURITY AND PROTECTION FACILITIES INSTALLATION: Except for use of permanent fire protection as soon as available, do not change from use of temporary security and protection facilities to permanent facilities until Substantial Completion.

A. Fire Protection: Until fire protection is supplied by permanent facilities, install and maintain temporary fire protection of types needed to protect against predictable and controllable fire losses. Comply with NFPA 10 "Standard for Portable Fire Extinguishers," and NFPA 241 "Standard for Safeguarding Construction, Alterations and Demolition Operations."

B. Permanent Fire Protection: At the earliest date, complete installation of the permanent fire protection facility, including connected services, and place into operation. Instruct key personnel on use of facilities.

1. The permanent Fire Protection System shall be operational before any furniture is installed in facility.

C. Enclosure Fence: Construction Manager/Design Builder's option, unless otherwise required by the Owner/Construction Manager/Design Builder's Agreement.

D. Environmental Protection: Operate temporary facilities and conduct construction by methods that comply with environmental regulations, and minimize the possibility that air, waterways, and subsoil might be contaminated or polluted. Avoid use of tools and equipment which produce harmful noise. Restrict use of noise making tools and equipment to hours that will minimize complaints.

3.05 OPERATION: Enforce strict discipline in use of temporary facilities. Limit availability to intended use to minimize abuse. Maintain facilities in good operating condition until removal.

A. Protect from damage by freezing temperatures and the elements.

1. Maintain operation of enclosures, heating, cooling, humidity control, ventilation, and similar facilities on a 24-hour day basis to achieve indicated results and to avoid damage.

2. Prevent piping from freezing. Maintain markers for underground lines. Protect from damage during excavation operations.

3.06 TERMINATION AND REMOVAL: Remove each facility when the need has ended, or replaced by a permanent facility or no later than Substantial Completion. Complete or restore construction delayed because of interference with the facility. Repair damaged Work, clean exposed surfaces, and replace construction that cannot be satisfactorily repaired.

A. Temporary facilities are property of the Construction Manager/Design-Builder.

B. Remove paving that is not acceptable for integration into permanent paving. Where the area is intended for landscape development, remove soil and fill that does not comply with requirements. Remove materials contaminated wit road oil, asphalt and other petrochemical compounds, and other substances that might impair growth of plant materials. Repair or replace street paving, curbs, and sidewalks at the temporary entrances.

C. At Substantial Completion, renovate permanent facilities used during the construction period, including but not limited to:

1. Replace air filters and clean inside of ductwork and housings.

2. Replace worn parts and parts subject to unusual operating conditions.

Reviewed for Code Compliance
Inspections Division
Approved with Conditions
Date: 10/31/17

3. Replace lamps burned out or noticeably dimmed by substantial hours of use.

END OF SECTION

Reviewed for Code Compliance
Inspections Division
Approved with Conditions
Date: 10/31/17

SECTION 01580 - PROJECT IDENTIFICATION

PART 1 GENERAL

1.01 SUMMARY

A. Section Includes:

1. The Contractor shall provide and maintain at the site one project sign.
2. No other signs or advertisements will be allowed to be displayed on the premises.

1.02 QUALITY ASSURANCE

A. Design sign and structure to withstand 50 mph wind velocity.

B. Sign Painter: Engaged as professional sign painter for not less than three years.

C. Finishes, Painting: Adequate to withstand weathering, fading, and chipping for duration of construction.

PART 2 PRODUCTS

2.01 MATERIALS

A. Structure and Framing: New wood, 4' x 4' x 8' treated posts, structurally adequate.

B. Sign Mounting Board: 4' x 8', exterior grade, GPX yellow or green plywood with medium density overlay, minimum 3/4 inch thick.

C. Rough Hardware: Galvanized, aluminum or brass.

D. Paint and Primers: Exterior quality, two coats. Color to be White.

E. Vinyl sign to be provided by CM and installed by CM.

PART 3 EXECUTION

3.01 CONSTRUCTION

A. Install project identification sign within 30 days after date fixed by Owner-Contractor Contract.

B. Erect at designated location as directed by Construction Manager/Design-Builder.

C. Erect supports and framing with uprights 36 inches below surface, braced and framed to resist wind loadings.

D. Install sign surface plumb and level, with butt joints. Anchor securely.

E. Paint sight-exposed surfaces of sign, supports, and framing.

3.02 MAINTENANCE

A. Maintain signs and supports clean. Repair deterioration and damages.

3.03 REMOVAL

A. Remove signs, framing, supports, and foundations at completion of the Project, when directed by Construction Manager/Design-Builder and restore the area.

END OF SECTION

Reviewed for Code Compliance
Inspections Division
Approved with Conditions
Date: 10/31/17

SECTION 01600 - PRODUCT REQUIREMENTS

PART 1 GENERAL

1.01 SUMMARY

A. Section Includes:

1. Products
2. Transportation and Handling
3. Storage and Protection
4. General Product Requirements

B. Related Sections:

1. Section 01 33 00 (01330) - Submittals and Substitutions
2. Section 01 45 00 (01450) - Quality Control: Product quality monitoring.

1.02 QUALITY ASSURANCE

A. Do not use materials and equipment removed from existing premises, except as specifically permitted by the Contract Documents.

B. Provide interchangeable components of the same manufacturer, for components being replaced.

1.03 PRODUCT DELIVERY AND HANDLING

A. Transport and handle products in accordance with manufacturer's instructions.

B. Promptly inspect shipments to ensure that Products comply with requirements, quantities are correct, and Products are undamaged.

C. Provide equipment and personnel to handle Products by methods to prevent soiling, disfigurement, or damage.

1.04 STORAGE AND PROTECTION

A. Store and protect Products in accordance with manufacturers' instructions, with seals and labels intact and legible.

B. Store sensitive Products in weather tight, climate controlled enclosures.

C. For exterior storage of fabricated Products, place on sloped supports, above ground.

D. Provide bonded off-site storage and protection when site does not permit on-site storage or protection.

E. Cover Products subject to deterioration with impervious sheet covering. Provide ventilation to avoid condensation or potential degradation of Product.

F. Store loose granular materials on solid flat surfaces in a well-drained area. Prevent mixing with foreign matter.

G. Provide equipment and personnel to store Products by methods to prevent soiling, disfigurement, or damage.

H. Arrange storage of Products to permit access for inspection. Periodically inspect to verify Products are undamaged and are maintained in acceptable condition.

Reviewed for Code Compliance
Inspections Division
Approved with Conditions
Date: 10/31/17

PART 2 PRODUCTS

2.01 General Product Requirements:

A. Semi-Open Proprietary Specification Requirements: Where Specifications name one or more products or manufacturers, provide one of the products indicated.

1. Where Specifications specify products or manufacturers by name, accompanied by the term "Approved Substitution", the Construction Manager/Design-Builder will allow products as substitutions only after complying with the requirements of the General Conditions and Section 01330.

PART 3 EXECUTION

Not Used

END OF SECTION

Reviewed for Code Compliance
Inspections Division
Approved with Conditions
Date: 10/31/17

SECTION 01720- FIELD ENGINEERING

PART 1 GENERAL

1.01 SUMMARY

A. Section Includes:

1. Quality Assurance
2. Submittals
3. Project Record Documents
4. Survey Requirements
5. Examination
6. Survey Reference Points

B. Related Sections:

1. General Conditions: Basic site engineering requirements.
2. Section 01 31 32 (00320) - Geotechnical Data: Owner's topographic survey.
3. Section 01 77 00 (01770) - Contract Closeout: Project Record Documents.

1.02 QUALITY ASSURANCE

A. Employ a Land Surveyor or Engineer registered in the State where project is located and acceptable to the Owner to perform survey work of this section.

B. Submit evidence of Surveyor's or Engineer's Errors and Omissions insurance coverage in the form of an Insurance Certificate.

1.03 SUBMITTALS

A. Submit a copy of registered site drawing and a certificate signed by the Land Surveyor or Engineer, that the elevations and locations of the Work are in conformance with Contract Documents.

B. On request, submit documentation verifying accuracy of survey work.

1.04 PROJECT RECORD DOCUMENTS

A. Maintain a complete and accurate log of control and survey work as it progresses.

B. On completion of foundation walls and major site improvements, prepare a certified survey illustrating dimensions, locations, angles, and elevations of construction and site work.

1.05 SURVEY REQUIREMENTS

A. Provide field engineering services. Utilize recognized engineering survey practices.

B. Establish a minimum of two permanent bench marks on site, referenced to established control points. Record locations, with horizontal and vertical data, on project record documents.

C. Submit Project Record Documents under provisions of Section 01 78 39.

D. Establish elevations, lines and levels. Locate and lay out by instrumentation and similar appropriate means.

E. Periodically verify layouts by same means

PART 2 PRODUCTS

Not Used

Reviewed for Code Compliance
Inspections Division
Approved with Conditions
Date: 10/31/17

PART 3 EXECUTION

3.01 EXAMINATION

A. Verify locations of survey control points prior to starting work. Verify set-backs and easements, confirm drawing dimensions and elevations.

B. Promptly notify Construction Manager/Design-Builder of any discrepancies discovered.

3.02 SURVEY REFERENCE POINTS

A. Subcontractor to locate and protect survey control and reference points.

B. Protect survey control points prior to starting site work; preserve permanent reference points during construction.

C. Promptly report to Construction Manager/Design-Builder the loss or destruction of any reference point or relocation required because of changes in grades or other reasons.

D. Replace dislocated survey control points based on original survey control. Make no changes without prior written notice to Construction Manager/Design-Builder.

END OF SECTION

Reviewed for Code Compliance
Inspections Division
Approved with Conditions
Date: 10/31/17

SECTION 01730 - CUTTING AND PATCHING

PART 1 GENERAL

1.01 SUMMARY

A. Section Includes:

1. Administrative and Procedural Requirements for Cutting and Patching

B. Related Documents:

1. Refer to other Sections of these Specifications, including Divisions 15 and 16, for specific requirements and limitations applicable to cutting and patching individual parts of the work.

1.02 CUTTING AND PATCHING PROPOSAL:

A. Where approval of procedures is required before proceeding, submit a proposal describing procedures in advance of the time cutting and patching will be performed. Include the following information, as applicable:

1. Describe the extent of cutting and patching required and how it is to be performed. Indicate why it cannot be avoided.
2. Describe anticipated results, include changes to structural elements and operating components and changes in the building's appearance and other visual elements.
3. List products to be used and entities that will perform work.
4. Indicate dates when cutting and patching is to be performed.
5. List utilities that will be disturbed, including those that will be relocated and those that will be temporarily out-of service. Indicate how long service will be disrupted.
6. Approval by the Construction Manager/Design-Builder to proceed does not waive the Construction Manager/Design-Builder's right to later require complete removal and replacement of work found to be unsatisfactory.

1.03 STRUCTURAL WORK:

A. Do not cut and patch structural elements in a manner that would reduce the load-carrying capacity or load deflection ratio. Obtain approval of the cutting and patching proposal before cutting and patching structural elements.

1.04 OPERATIONAL AND SAFETY LIMITATIONS:

A. Do not cut and patch operating elements or safety components in a manner that would reduce their capacity to perform as intended, or would increase maintenance, or decrease operational life or safety. Obtain approval of the cutting and patching proposal before cutting and patching operating elements or safety related systems.

1.05 VISUAL REQUIREMENTS:

A. Do not cut and patch construction exposed on the exterior or in occupied spaces in a manner that would reduce the building's aesthetic qualities or result in visual evidence of cutting and patching. Remove and replace Work cut and patched in a visually unsatisfactory manner.

PRODUCTS

1.06 MATERIALS:

A. Use materials identical to existing materials. If identical materials are not available or cannot be used where exposed surfaces are involved, use materials that match existing adjacent surfaces to the fullest extent possible. Use materials whose performance will equal or surpass that of existing materials.

Reviewed for Code Compliance
Inspections Division
Approved with Conditions
Date: 10/31/17

PART 2 EXECUTION

2.01 EXAMINATION:

A. Before cutting, examine surfaces to be cut and patched and conditions under which cutting and patching is to be performed. Take corrective action before proceeding if unsafe or unsatisfactory conditions are encountered.

2.02 PREPARATION:

A. Provide temporary support of work to be cut.

2.03 CLEANING:

A. Thoroughly clean areas and spaces where cutting and patching is performed or used as access. Remove paint, mortar, oils, putty and similar items. Thoroughly clean piping, conduit, and similar features before painting or finishing is applied. Restore damaged pipe covering to its original condition.

2.04 PROTECTION:

A. Protect existing construction during cutting and patching to prevent damage. Provide protection from adverse weather conditions for portions that might be exposed during cutting and patching operations.

B. Avoid interference with use of adjoining areas or interruption of free passage to adjoining areas.

C. Take all precautions to avoid cutting existing pipe, conduit, or ductwork serving the building, but scheduled to be removed, or relocated until provisions have been made to bypass them.

2.05 PERFORMANCE:

A. Employ skilled workmen to perform cutting and patching. Proceed with cutting and patching at the earliest feasible time and complete without delay.

B. Cut existing construction to provide for the installation of other components or the performance of other construction activities and the subsequent fitting and patching required to restore surfaces to their original condition.

2.06 CUTTING:

A. Cut existing construction using methods least likely to damage elements to be retained or adjoining construction. Where possible, review procedures with the original installer. Comply with the original installer's recommendations.

B. All cutting of areas shall be by Contractor requiring cutting, except where noted otherwise in the Specifications and/or Drawings.

C. Where cutting is required, use hand or small power tools designed for sawing or grinding, not hammering and chopping. Cut holes and slots to size required with minimum disturbance of adjacent surfaces. Temporarily cover openings when not in use. To avoid marring existing finished surfaces, cut or drill from the exposed or finished side into concealed surfaces.

D. Cut through concrete and masonry using a cutting machine such as a carborundum saw or diamond core drill. Overcuts are **NOT** allowed

E. Comply with requirements of applicable sections of Division 02 where cutting and patching requires excavating and backfilling.

2.07 PATCHING:

A. Patch with durable seams that are as invisible as possible. Comply with specified tolerances.

B. All patching shall be by Subcontractor doing cutting work and shall be performed by trade who would customarily be performing that type of work.

Reviewed for Code Compliance
Inspections Division
Approved with Conditions
Date: 10/31/17

C. Restore exposed finishes of patched areas and extend finish restoration into retair adjoining construction in a manner that will eliminate evidence of patching and refinishing.

1. Where patching occurs in a smooth painted surface, extend final paint coat over entire unbroken surface containing the patch, after the patched area has received primer and second coat.

2. Patch, point or grout flush all voids, holes, chips, cracks, spalls, broken or otherwise damaged surfaces. Patch with materials which match adjacent surfaces in appearance and quality

D. Repair surfaces exposed by removed finishes or equipment.

END OF SECTION

Reviewed for Code Compliance
Inspections Division
Approved with Conditions
Date: 10/31/17

SECTION 01770

PROJECT CLOSEOUT

1. GENERAL

1.1 DESCRIPTION OF REQUIREMENTS

A. Provisions of this section apply to the procedural requirements for the actual closeout of the Work, not to administrative matters such as final payment or the change over of insurance.

B. Closeout requirements relate to both substantial and final completion of the Work; they also apply to individual portions of completed work as well as the total Work.

C. Specific requirements contained in other sections have precedence over the general requirements contained in this section.

1.2 PROCEDURES AT SUBSTANTIAL COMPLETION

A. Prerequisites: Comply with General Conditions and complete the following before requesting Owner's inspection of the Work, or a designated portion of the Work, for certification of substantial completion.

1. Submit executed warranties, workmanship bonds, maintenance agreements, inspection certificates and similar required documentation for specific units of work, enabling owner's unrestricted occupancy and use.

2. Submit record documentation, maintenance manuals, tools, spare parts, keys and similar operational items.

3. Complete instruction of Owner's operating personnel, and start-up of systems.

4. Complete final cleaning, and remove temporary facilities and tools.

B. Inspection Procedures:

1. Upon receipt of Subcontractor's request, Owner will either proceed with inspection or advise CM of prerequisites not fulfilled.

2. Following initial inspection, Construction Manager/Design-Builder will either prepare certificate of substantial completion, or advise Contractor of work which must be performed prior to issuance of the certificate of substantial completion.

3. The Owner/Design-Builder will repeat the inspection when requested and assure that the Work has been substantially completed.

Reviewed for Code Compliance
Inspections Division
Approved with Conditions
Date: 10/31/17

4. Results of the completed inspection will form the initial "punch-list" for final acceptance.

1.3 PROCEDURES AT FINAL ACCEPTANCE

A. Reinspection Procedure:

1. The Owner will reinspect the Work upon receipt of the Contractor's notice that, except for those items whose completion has been delayed due to circumstances that are acceptable to the Architect/Engineer, the Work has been completed, including punch-list items from earlier inspections.

2. Upon completion of reinspection, the Owner will either recommend final acceptance and final payment, or will advise the CM of work not completed or obligations not fulfilled as required for final acceptance. If necessary, this procedure will be repeated.

1.4 RECORD DOCUMENTATION

A. Record Drawings:

1. Maintain a complete set of either blue- or black-line prints of the contract drawings and shop drawing for record mark-up purposes throughout the Contract Time.

2. Mark-up these drawings during the course of the work to show both changes and the actual installation, in sufficient detail to form a complete record for the Owner's purposes. Give particular attention to work which will be concealed and difficult to measure and record at a later date, and work which may require servicing or replacement during the life of the project.

3. Require the entities marking prints to sign and date each mark-up.

4. Bind prints into manageable sets, with durable paper covers, appropriately labeled.

B. Maintenance Manuals:

1. Provide 3-ring vinyl-covered binders containing required maintenance manuals, properly identified and indexed.

2. Include operating and maintenance instructions extended to cover emergencies, spare parts, warranties, inspection procedures, diagrams, safety, security, and similar appropriate data for each system or equipment item.

1.5 GENERAL CLOSEOUT REQUIREMENTS

A. Operator Instructions: Require each Installer of systems requiring continued operation and maintenance by Owner's operating personnel, to provide on-location instruction to Owner's personnel, sufficient to ensure safe, secure, efficient, non-failing utilization and operation of systems. Provide instructions for the following categories of work:

Reviewed for Code Compliance
Inspections Division
Approved with Conditions
Date: 10/31/17

1. Mechanical/electrical/electronic systems (not limited to work of Divisions 15 and 16).
2. Live plant materials and lawns.
3. Roofing, flashing, joint sealers.
4. Floor finishes.

B. Final Cleaning: At the time of project close out, clean or reclean the Work to the condition expected from a normal, commercial building cleaning and maintenance program. Complete the following cleaning operations before requesting the Owner's inspection for certification of substantial completions.

1. Remove non-permanent protection and labels.
2. Polish glass.
3. Clean exposed finishes.
4. Touch-up minor finish damage.
5. Clean or replace mechanical systems filters.
6. Remove debris.
7. Broom-clean unoccupied spaces.
8. Sanitize plumbing and food service facilities.
9. Clean light fixtures and replace burned-out lamps.
10 Sweep and wash paved areas.
11. Police yards and grounds

END OF SECTION

Reviewed for Code Compliance
Inspections Division
Approved with Conditions
Date: 10/31/17

KOHLER K-728-K-NA MASTERSHOWER
OR 3 WAY TRANSFER VALVE
7ea KOHLER K-T10185-7-CP MASTER SHOWER
TRIM

SECTION 01780 - BONDS AND WARRANTIES

PART 1 GENERAL

1.01 SUMMARY

A. Section Includes:

1. This Section specifies general administrative and procedural requirements for warranties, guarantees, and bonds required by the Contract Documents, including manufacturers standard warranties on products and special warranties. Warranties required by the Specifications, Divisions 02 through 33, shall not deprive the Owner of other rights the Owner may have under other provisions of the Contract Documents and shall be in addition to other warranties made by the Subcontractors under the Contract Documents.

2. Disclaimers and Limitations: Manufacturer's disclaimers and limitations on product warranties do not relieve the Subcontractor of the warranty on the Work that incorporates the products, nor does it relieve suppliers, manufacturers, and Subcontractors required to countersign special warranties with the Construction Manager/Design-Builder.

B. Related Sections:

1. Additional requirements as specified in General Conditions.

2. General closeout requirements are included in Section 01 77 00 (01770) Contract Closeout.

3. Warranties, including requirements for certifications for the work and products and installation that are specified to be warranted, are stated in the individual Specification Sections of Divisions 02 through 33.

4. Specific certification requirements and other commitments and agreements for continuing services to the Owner are specified elsewhere in the Contract Documents.

1.02 DEFINITIONS

A. Categories of Specific Warranties: Warranties on the work are in several categories, including those of General Conditions, and including (but not necessarily limited to) the following specific categories related to individual units of work specified in sections of Divisions 02 through 33 of these Specifications.

1. Special Project Warranty (Guarantee): A warranty specifically written and signed by Construction Manager/Design-Builder for a defined portion of the Work and, where required, countersigned by Subcontractor, installer, manufacturer, or other entity engaged by Construction Manager/Design-Builder.

2. Specified Product Warranty: A warranty which is required by Contract Documents, to be provided for a manufactured product incorporated into the Work, regardless of whether manufacturer has published a similar warranty without regard for specific incorporation of product into the Work, or has written and executed a special project warranty as a direct result of Contract Documents requirements.

3. Coincidental Product Warranty: A warranty which is not specifically required by Contract Documents (other than as specified in this Section), but which is available on a product incorporated into the work by virtue of the fact that manufacturer of product has published warranty in connection with purchases and uses of product without regard for specific applications, except as otherwise limited by terms of warranty.

Reviewed for Code Compliance
Inspections Division
Approved with Conditions
Date: 10/31/17

1.03 SUBMITTALS

A. If the date of Substantial Completion designates a commencement date for warranties otl than the proposed date of Substantial Completion for the Work, or a designated portion of the Work, the Subcontractor shall submit written warranties upon request of the Owner, in accordance with this Section.

B. When a designated portion of the Work is completed and occupied or used by the Owner, by separate agreement with the Construction Manager/Design-Builder during the construction period, properly executed warranties should be submitted to the Owner within 15 Check prime contract days of completion of that designated portion of the Work.

C. When a special warranty is required to be executed by the Construction Manager/Design-Builder, or the Construction Manager/Design-Builder and a Subcontractor, supplier or manufacturer, a written document should be prepared which contains appropriate terms and identification, ready for execution by the required parties. Draft copies should be submitted for approval prior to final execution.

D. Refer to individual Sections of Divisions 02 through 33 for specific content requirements, and particular requirements for submittal of special warranties.

E. Final Form of Submittal: Prior to certification for Substantial Completion, compile two original copies of each approved warranty and bond properly executed by the Construction Manager/Design-Builder, or by the Construction Manager/Design-Builder, Subcontractor, supplier, or manufacturer. Organize the warranty documents into an orderly sequence based on the table of contents of the Specifications.

1. Bind warranties and bonds in heavy-duty, commercial quality, durable 3-ring vinyl covered loose-leaf binders.

F. Provide additional photocopies of each warranty for inclusion in the appropriate volume of the Operating and Maintenance Manuals.

1.04 QUALITY ASSURANCE

A. Disclaimers and Limitations: Manufacturer's disclaimers and limitations on product warranties do not relieve the Construction Manager/Design-Builder ontractor of the warranty on the Work that incorporates the products. Manufacturer's disclaimers and limitations on product warranties do not relieve suppliers, manufacturers, and Subcontractors required to countersign special warranties with the Construction Manager/Design-Builder Contractor.

1.05 WARRANTY REQUIREMENTS

A. Conform to General Conditions, Article 37, and the following:

1. Related Damages and Losses: When correcting warranted Work that has failed, remove and replace other Work that has been damaged as a result of such failure or that must be removed and replaced to provide access for correction of warranted Work.

2. Reinstatement of Warranty: When Work covered by a warranty has failed and been corrected by replacement or rebuilding, reinstate the warranty by written endorsement. The reinstated warranty shall be equal to the original warranty with date of revised warranty beginning from date of repair.

3. Replacement Cost: Upon determination that Work covered by a warranty has failed, replace or rebuild the Work to an acceptable condition complying with requirements of Contract Documents. The Subcontractor is responsible for the cost of replacing or rebuilding defective Work regardless of whether the Owner has benefited from use of the Work through a portion of its anticipated useful service life.

B. Owner's Recourse: Written warranties made to the Owner are in addition to implied warranties, and shall not limit the duties, obligations, right and remedies otherwise available under the law, nor shall warranty periods be interpreted as limitations on time in which the Owner can enforce such other duties, obligations, rights, or remedies.

Reviewed for Code Compliance
Inspections Division
Approved with Conditions
Date: 10/31/17

C. Rejection of Warranties: The Owner reserves the right to reject warranties and to li selections to products with warranties not in conflict with requirements of the Contr Documents.

D. The Owner reserves the right to refuse to accept Work for the Project where a special warranty, certification, or similar commitment is required on such Work or part of the Work, until evidence is presented that entities required to countersign such commitments are willing to do so.

E. In the event that the Owner or any of its agents takes possession of the Work or any portion thereof, pursuant to the Contract Provisions, warranties shall not start until such work, or portions thereof, are separately and finally accepted. Warranty coverage for system components shall not become effective until the Owner makes final acceptance of the system or a separate portion of the system containing the component. All affected warranties shall continue in force for a period of at least one (1) year from the date of final acceptance of the work or any portion thereof.

PART 2 PRODUCTS

Not Used

PART 3 EXECUTION

Not Used

END OF SECTION

Reviewed for Code Compliance
Inspections Division
Approved with Conditions
Date: 10/31/17

SECTION 01785 - PROJECT RECORD DOCUMENTS

PART 1 GENERAL

1.01 SUMMARY

A. Section Includes:

1. This Section specifies administrative and procedural requirements for Project Record Documents to be prepared and submitted by the General Contractor.

2. Project Record Documents required include:

a. Marked-Up Copies of Record Drawings, Specifications, and Product Data

b. Record Samples

c. Miscellaneous Record Submittals

B. Related Sections:

1. General project closeout requirements are included in “Contract Closeout”, Section 01770.

2. General requirements for submittal of Shop Drawings and Product Data are included in General Conditions and the Section “Submittals and Substitutions,” Section 01330.

3. Specific record copy requirements that expand requirements of this Section are included in the individual Sections of Divisions 02 through 33.

4. Operating and maintenance data is specified in Section 01830.

1.02 MAINTENANCE OF DOCUMENTS AND SAMPLES

1.03 RECORD DRAWINGS

A. The Subcontractor shall maintain a white-print set (blue-line or black-line) of Contract Drawings and Shop Drawings in clean, undamaged condition, with mark-up of actual installations which vary substantially from the work as originally shown. Mark whichever drawing is most capable of showing "field" condition fully and accurately; however, where Shop Drawings are used for mark-up, record a cross reference at corresponding location on working drawings. Mark with red erasable pencil and, where feasible, use other colors to distinguish between variations in separate categories of work. Mark-up new information which is recognized to be of importance to Owner, but was for some reason not shown on either Contract Drawings or Shop Drawings. Give particular attention to concealed work, which would be difficult to measure and record at a later date. Note related change order numbers where applicable. Organize record drawing sheets into manageable sets, bind with durable paper cover sheets, and print suitable titles, dates, and other identification on cover of each set.

B. Responsibility for Markup: Where feasible, the individual or entity who obtained record data, whether the individual or entity is the installer, Subcontractor, or similar entity, is required to prepare the mark-up on Record Drawings.

1. Where record Product Data is required as part of maintenance manuals, submit marked-up Product Data as an insert in the manual instead of submittal as record Product Data. Refer to Section 01 78 23 (01830) for requirements. Submit to the Construction Manager/Design-Builder.

2. The Subcontractor is responsible for mark-up and submittal of record Product Data.

Reviewed for Code Compliance
Inspections Division
Approved with Conditions
Date: 10/31/17

1.04 SAMPLES

A. Immediately prior to date of Substantial Completion, the CM shall meet with the Owner at site to determine which of the Samples maintained during the construction period shall be transmitted to the Construction Manager/Design-Builder for record purposes. Comply with the instructions for packaging, identification marking, and delivery to storage space. Dispose of other Samples in manner specified for disposal of surplus and waste materials.

1.05 MISCELLANEOUS RECORD SUBMITTALS

A. Refer to other Specification Sections for miscellaneous record-keeping requirements and submittals in connection with various construction activities. Immediately prior to Substantial Completion, complete miscellaneous records and place in good order, properly identified and bound or filed, ready for use and reference. Submit to the Construction Manager/Design-Builder.

1. Categories of requirements resulting in miscellaneous records include, but are not limited to, the following:

a. Field Records on Excavations and Foundations

b. Field Records on Underground Construction and Similar Work

c. Survey Showing Locations and Elevations of Underground Lines

d. Invert Elevations of Drainage Piping

e. Surveys Establishing Building Lines and Levels

f. Authorized Measurements Utilizing Unit Prices or Allowances

g. Batch Mixing and Bulk Delivery Records

h. Load and Performance Testing

i. Inspections and Certifications by Governing Authorities

j. Leakage and Water-Penetration Tests

k. Fire Resistance and Flame Spread Test Results

l. Final Inspection and Correction Procedures

PART 2 PRODUCTS

Not Used

PART 3 EXECUTION

3.01 RECORDING

A. Post changes and modifications to the Documents as they occur. Do not wait until the end of the Project.

END OF SECTION

Reviewed for Code Compliance
Inspections Division
Approved with Conditions
Date: 10/31/17

SECTION 01790 - SPARE PARTS

PART 1 GENERAL

1.01 SUMMARY

A. Section Includes:

1. Spare Parts and Materials

B. Related Sections:

1. Refer to individual sections for items listed herein, as well as other requirements.

PART 2 PRODUCTS

2.01 EXTRA MATERIALS - GENERAL

A. At the time of building acceptance, deliver to the Construction Manager/Design-Builder the following extra materials. Deliver in original unopened cartons or containers (except paint) with each item properly identified.

2.02 ASPHALT SHINGLES (07 31 13)

A. Furnish minimum of one full square of each type/color/texture shingle used in the work. Provide in unopened, clearly labeled bundles or containers.

2.03 JOINT SEALANTS (07 92 00)

A. Furnish extra sealant materials from same production run as the materials applied in the quantities described below. Package materials in unopened, factory-sealed containers with labels describing contents.

1. Quantity: Furnish one unused tube of each type and color of exterior sealant applied.

2.04 CERAMIC TILING (09 30 13)

A. Furnish extra materials described below that match products installed, are packaged with protective covering for storage, and are identified with labels describing contents.

1. Tile and Trim Units: Furnish quantity of full-size units equal to one case for each type, composition, color, pattern, and size indicated.

2.05 ACOUSTIC TILE CEILINGS (09 51 23)

A. Replacement stock amounting to one full box (minimum 12 tiles) of each type.

2.06 PLASTIC-LAMINATE FLOORING (09 62 19)

A. Furnish extra materials matching products installed as described below, packaged with protective covering for storage and identified with labels clearly describing contents.

1. Flooring: Equal to one full box of amount installed for each pattern and color indicated.

2. Trim: 10 lineal feet of each profile used.

2.07 RESILIENT FLOORING (09 65 00)

A. Furnish extra materials matching products installed as described below, packaged with protective covering for storage and identified with labels clearly describing contents.

Reviewed for Code Compliance
Inspections Division
Approved with Conditions
Date: 10/31/17

1. Furnish not less than one box of each class, wearing surface, color, pattern, and size resilient floor tile installed.

2.08 CARPETING (09 68 00)

A. Furnish extra materials described below before installation begins that match products installed and that are packaged with protective covering for storage and identified with labels describing contents.

1. The Owner shall be permitted to view all carpet scraps and retain any that is chosen for future repairs before they are removed from the job site.

2.09 PAINTING AND SPECIAL COATINGS (09 90 00 / 09 96 00)

A. Furnish extra paint materials from the same production run as the materials applied in the quantities described below. Package paint materials in unopened, factory-sealed containers for storage.

1. Quantity: Furnish the Owner with two gallons of each material and color applied in addition to any leftover amounts.

2. All cans shall be labeled with Finish Index number.

2.10 WALLCOVERING (09 72 00)

A. Package materials with protective covering and identify with labels describing contents.

1. Furnish full-size units equal to two full rolls of each type installed and return all unused material to Owner.

2.11 FIRE SUPPRESSION (21 10 00)

A. Operating key handles: Furnish one extra for each key-operated hose bibb and hydrant installed.

B. Sprinkler Cabinets:

1. Finished, wall-mounting steel cabinet and hinged cover, with space for a minimum of six spare sprinklers plus sprinkler wrench.

2. Include the number of sprinklers required by NFPA 13 and wrench for sprinklers.

3. Include separate cabinet with sprinklers and wrench for each type of sprinkler on Project.

2.12 PLUMBING FIXTURES (22 40 00)

A. Shower Heads: Two units of each type.

B. Faucet Sets: Five complete sets for Guest Room units.

C. Toilet Seats: Furnish quantity of identical units not less than 2 of each type installed.

2.13 PLUMBING SPECIALTIES (22 40 00.01)

A. Operating key handles: Furnish one extra for each key-operated hose bibb and hydrant installed.

2.14 DUCT ACCESSORIES (23 33 00)

A. Fusible Links: Furnish quantity equal to 5 of each type installed.

Reviewed for Code Compliance
Inspections Division
Approved with Conditions
Date: 10/31/17

2.15 POWER VENTILATORS (23 34 23)

A. Furnish one set of belts for each belt-driven fan that match products installed, are packaged with protective covering for storage, and are identified with labels clearly describing contents.

2.16 SELF-CONTAINED AIR-CONDITIONING UNITS (23 81 19)

A. Filters: One set of filters for each unit for PTAC, VTAC, split A/C and Packaged HVAC units.

B. Fan Belts: One set of belts for each unit for Packaged HVAC units.

2.17 PACKAGED TERMINAL AIR CONDITIONING UNITS (23 81 13.13)

A. Replacement stock amounting to providing four complete spare units the most common size used.

B. Furnish two spare thermostat for each type/size installed.

2.18 ENCLOSED CONTROLLERS (26 29 13)

A. Furnish extra materials described below that match products installed, are packaged with protective covering for storage, and are identified with labels describing contents:

1. Spare Fuses and Incandescent Indicating Lamps: Furnish one set of three for each kind.

2.19 INTERIOR LIGHTING (26 51 00)

A. Furnish extra materials described below that match products installed and that are packaged with protective covering for storage and identified with labels describing contents:

1. Lamps: Five of each rating installed of the following types (Refer the Light Fixture Schedule located in the Appendix):

a. Incandescent

b. Fluorescent

c. Compact Fluorescent

d. Metal Halide

2.20 EXTERIOR LIGHTING (26 56 00)

A. Furnish extra materials described below that are packaged with protective covering for storage and identified with labels describing contents.

1. Lamps: Five of each rating installed of the following types (Refer the Light Fixture Schedule located in the Appendix):

a. Incandescent.

b. Fluorescent

c. Compact Fluorescent

d. Metal Halide

2.21 FIRE ALARM AND DETECTION SYSTEMS (28 31 00)

A. Furnish extra materials described below that match products installed and that are packaged with protective covering for storage and identified with labels describing contents:

Reviewed for Code Compliance
Inspections Division
Approved with Conditions
Date: 10/31/17

1. Lamps for remote indicating lamp units: Two units.
2. Lamps for strobe units: Two units.
3. Smoke detectors, fire detectors, and carbon monoxide detectors: Two units of each type.
4. Detector bases: Two units of each type.

PART 3 EXECUTION

Not Used

END OF SECTION

Reviewed for Code Compliance
Inspections Division
Approved with Conditions
Date: 10/31/17

SECTION 01820 - DEMONSTRATION AND TRAINING

PART 1 GENERAL

1.01 SUMMARY

A. Section Includes:

1. This Section specifies the administrative requirements, procedural obligations, terms and conditions and training requirements related to instructing the facility engineering personnel in the proper care, preservation, operations and maintenance of materials, finishes, equipment and systems.

   a. Preparation and submittal of instructor qualifications, training schedules, and agendas for various building materials, components, systems and equipment.

   b. Instruction of the Owner's personnel and adjunct organizations in the proper operation and maintenance of all building materials, components, systems and equipment.

B. Related Sections:

1. Special operating and maintenance data requirements for specific equipment or building operating systems are included in the appropriate Specification Sections of Divisions 02 through 33.

2. Preparation of Shop Drawings and Product Data are included in Specification Section 01 33 00 (01330), Submittals and Substitutions.

3. General closeout requirements are included in Specification Section 01 77 00 (01770). Contract Closeout.

4. General requirements for submittal of Project Record Documents are included in Section 01 78 39 (01785), Project Record Documents.

5. Additional training requirements for building systems and/or equipment are delineated in the appropriate Specification Sections, Divisions 02 through 33.

6. Where training manuals include information on work installed by the Subcontractor and their Sub-Subcontractors, the Subcontractor shall be responsible for the preparation of the manuals, including collection, collation and binding of the material and submittal of data as specified.

1.02 QUALITY ASSURANCE

A. The status of training deliverables shall be an integral part of the Subcontractor's coordination process. The Subcontractor and Construction Manager/Design-Builder shall meet with the Owner as required, to discuss progress-to-date, deficiencies and non-compliance issues.

1.03 TRAINING MANUALS

A. The completed FINAL VERSION of the approved Operation & Maintenance Manuals and the redlined set of the record "as-built" drawings shall be used as the basis of instruction. The Construction Manager/Design-Builder is not responsible for providing additional copies of these documents for training purposes.

Reviewed for Code Compliance
Inspections Division
Approved with Conditions
Date: 10/31/17

1.04 TRAINING HOURS

A. Training shall be conducted during normal working hours. All training shall be complet prior to the public opening of the hotel property.

PART 2 PRODUCTS

Not Used

PART 3 EXECUTION

3.01 TRAINING OF FACILITY ENGINEERING, OPERATING AND MAINTENANCE PERSONNEL

A. Instruct the hotel's personnel in operation, adjustment, and maintenance of all materials, components, equipment and systems.

1. Use the Operation and Maintenance Manuals and the Record "As-Built" Drawings for each piece of equipment or system as the basis of instruction. Review contents in detail to explain all aspects of installation, care and preservation, operation, preventive maintenance, service, and replacement.

2. The detailed review of the materials, components, systems and equipment shall include as minimum the following items:

a. Materials, components, systems and equipment

b. Safety precautions and procedures

c. Installation

d. Operational features and functions

e. Operational testing and diagnostics

f. Preventive and predictive maintenance

g. Service: Repair and replacement

h. Operation and Maintenance manual content

i. Commissioning: Testing, adjusting, calibration and balancing

j. Contractor furnished spare parts and extra materials

k. Recommended "spare parts" inventory not furnished by Contractor

l. Specialty tool requirements

m. Lubricants

n. Fuels

o. Identification systems

p. Automatic/manual control systems

q. Hazards/Material Safety Data Sheets

r. Cleaning

s. Procurement of replacement parts

t. Warranty reviews including terms and conditions, points of contact, return material procedures, effective date, extended warranty options

Reviewed for Code Compliance
Inspections Division
Approved with Conditions
Date: 10/31/17

u. Maintenance agreements and similar continuing commitments

v. Record "As-Built" Drawings

3. As part of the operations portion of the training session, demonstrate all operational features and functions.

4. Refer to other specification Sections for additional training requirements associated with engineering, operating and maintenance of various systems/equipment.

B. Provide a combination of classroom, field and factory training classes which includes as a minimum the following curricula requirements as indicated hereafter:

1. SITE WORK UTILITIES: one 2-hour class

a. Water, Storm, and Sanitary Sewer Facilities

b. Drainage Structures

c. Underdrains

d. Electrical Power Service

e. Gas Utilities

2. BUILDINGS AND STRUCTURES: one 4-hour class

a. Concrete

b. Unit Masonry

c. Metals

d. Woods and Plastics

e. Thermal and Moisture Protection

f. Doors and Windows

g. Finishes

h. Specialties

i. Fixtures, Furnishings and Equipment

3. ELEVATORS: one 1-hour class

4. HVAC: one 8-hour class

a. Basic Materials and Methods

b. Piping and Specialties

c. Insulation

d. Pumping

e. Refrigeration

f. Air Handling and Distribution

g. Pool Dehumidification

h. Automatic Temperature Controls

Reviewed for Code Compliance
Inspections Division
Approved with Conditions
Date: 10/31/17

i. Testing/Adjusting/Balancing

5. PLUMBING: one 4-hour class
   a. Basic Materials and Methods
   b. Piping and Specialties
   c. Insulation
   d. Pumping
   e. Fixtures, Trim and Accessories
   f. Domestic Water Heaters
   g. Water Softening
6. SWIMMING POOLS AND SPAS: one 2-hour class
   a. Basis Piping and Pumps
   b. Filter and Deck Equipment
   c. Pool Heater
   d. Water Treatment
7. FIRE SPRINKLERS: one 2-hour class
   a. Basic Materials and Methods
   b. Standpipe and Hose Systems
   c. Wet Pipe Sprinkler Systems
8. ELECTRICAL: one 8-hour class
   a. Basic Materials and Methods
   b. Service and Distribution
   c. Service Entrance
   d. Switchboards
   e. Disconnects
   f. Grounding
   g. Transformers
   h. Panelboards
   i. Overcurrent Protective Devices
   j. Contactors
   k. Voltage Surge Suppression
   l. Testing
   m. Lighting
   n. Interior and Exterior Luminaries, Lamps and Accessories
   o. Emergency Lighting

Reviewed for Code Compliance
Inspections Division
Approved with Conditions
Date: 10/31/17

p. Heat Tracing

9. SOUND SYSTEM: one 1-hour class

10. COMMUNICATION: one 2-hour class

    a. Voice and Data

    b. Television Distribution System

    c. Security Intercom System

11. FIRE ALARM SYSTEM: one 4-hour class

    a. System Zoning and Operations

    b. End-Devices

    c. Carbon Monoxide Monitoring

    d. Supervisory and Control Interface

        Sprinkler Systems
        Elevators
        HVAC Fan Control
        Telephone

    e. Graphic Enunciators

    f. Signage

12. FOOD SERVICE & LAUNDRY EQUIPMENT: one 8-hour class

    a. The Food Service & Laundry Equipment Contractor shall schedule demonstrations of all Class 2, 3 and 4 equipment by Factory Authorized Demonstrators, at times convenient to the Owner. Demonstration shall include competent instruction in the use, cleaning, repair, and maintenance of the equipment.

        1) Class l - Equipment that requires no demonstration. Written instructions will suffice (i.e. roll warmers, toasters, racks, refrigerators, etc.).

        2) Class 2 - Equipment that is easy to understand and quickly demonstrated by a Factory Authorized Demonstrator (i.e. ranges, slicers, disposers, etc.).

        3) Class 3 - Complex equipment which requires more in-depth knowledge of assembly, operation, maintenance or cleaning. (i.e. steam equipment, multi-tank dish washers, fryer batteries, etc.).

        4) Class 4 - High technology equipment or systems that require extensive training, or for which demonstrations are factory-required. (i.e. cook-chill systems, conveyor ovens, etc.).

END OF SECTION

Reviewed for Code Compliance
Inspections Division
Approved with Conditions
Date: 10/31/17

SECTION 01830 - OPERATION AND MAINTENANCE DATA

PART 1 GENERAL

1.01 SUMMARY

A. Section Includes:

1. This Section specifies the administrative requirements, procedural obligations, terms and conditions and general requirements related to the preparation and submittal of instruction manuals covering the materials installed, care, preservation and maintenance of products, finishes, equipment and systems.

B. Related Sections:

1. Special operating and maintenance data requirements for specific equipment or building operating systems are included in the appropriate Specifications Sections of Divisions 02 through 33.
2. Preparation of Shop Drawings and Product Data are included in Specification Section 01 33 00, "Submittals and Substitutions".
3. General closeout requirements are included in Specification Section 01 77 00, "Contract Closeout".
4. General requirements for submittal of Project Record Documents are included in Section 01 78 39, "Project Record Documents".

1.02 SUBMITTALS

A. Submittal Schedule: Comply with the following schedule for submittal of operating and maintenance manuals:

1. Submit two (2) copies of the first and subsequent drafts of each manual for review. Include a complete index and table of contents for each volume. One (1) copy will be returned within 45 days of receipt with comments. The first draft shall be at least 95% complete. Provide FINAL manuals prior to commencement of training; these manuals shall be utilized as instructional text during the building orientation and training processes. Refer to Section 01 78 39.

B. Form of Submittal: Manuals should be prepared in the form of an instructional manual for use by the Owner's operating personnel and/or property management company. The information should be bound as follows:

1. Binders: For each manual, provide heavy-gauge, commercial quality, vinyl hanging VUE presentation binders in 3" capacity sized to receive 8-1/2" by 11" paper. Binder color shall be white.
   a. Identify each binder on the spine with the typed or printed title "OPERATION AND MAINTENANCE MANUAL", project name and subject matter covered.
   b. Indicate the volume number for multiple volume sets of manuals.
2. Dividers: Manual contents shall be organized and divided by specification divisions using index maker dividers.
3. Protective Plastic Jackets: Provide protective transparent plastic jackets designed to enclose diagnostic software for computerized electronic equipment.

Reviewed for Code Compliance
Inspections Division
Approved with Conditions
Date: 10/31/17

4. Text Material: Where written material is required as part of the manual, use t manufacturer's standard printed material.

5. Drawings: Where drawings or diagrams are required as part of the manual, provide protective plastic jackets for the drawings and bind in with the text.

1.03 GENERAL MANUAL CONTENT

A. In each manual, include information specified in the individual Specification Section and the following information for each major component of building equipment and its controls:

1. General system or equipment description.
2. Design factors and assumptions.
3. Copies of approved shop drawings, product data, installation instructions and setup/calibration procedures.
4. Load and performance testing reports including equipment and system startup/performance documentation.
5. Fire/flame spread test certificates.
6. System or equipment identification, including:
   a. Name of manufacturer
   b. Model number
   c. Serial number
7. Standard operating instructions.
8. Emergency operating instructions.
9. Wiring diagrams including color coding, labeling and terminal designations.
10. Inspection and test procedures.
11. Detailed preventative maintenance procedures, frequencies and special tool requirements.
12. Operator trouble-shooting guide.
13. Precautions against improper use and maintenance.
14. Copies of warranties, including extended warranty options.
15. General owners operating/service manual.
16. Factory service manuals, including repair instructions and illustrated parts listing.
17. Electronic copies of operating system software (3.5 in. diskettes or CD-ROM).
18. Material safety data sheets.
19. Sources of required maintenance materials repair/replacement parts and related services.
20. Copies of inspections and certifications by governing authorities.

Reviewed for Code Compliance
Inspections Division
Approved with Conditions
Date: 10/31/17

B. Manual Index: Organize each manual into separate Sections for each piece of relat equipment. As a minimum each manual shall contain a title page, a table of contents, cop of Product Data, supplemented by drawings and written text, and copies of each warranty, bond and service contract proposal.

C. Title Page: Provide a title page as the first sheet of each manual. Provide the following information.

1. Subject matter covered by the manual.
2. Name and number of the Contract.
3. Date of submittal.
4. Name, address, and telephone number of the Subcontractor.
5. Name and address of the Construction Manager/Design-Builder.
6. Cross reference to related systems in other operating and maintenance manuals.

D. General Table of Contents: After the Title Page, include a typewritten table of contents for each volume (Divisions 02 through 33 inclusive), arranged according to the specification format.

E. General Information: Provide a general information Section immediately following the Table of Contents, listing by Specification Section each major product included in the manual, identified by product name. Under each product, list the name, address, telephone number, and point of contact of the Subcontractor or installer, and the maintenance contractor. Clearly delineate the extent of responsibility of each of these entities. In addition, list a local source for replacement parts and equipment.

F. Product Data: Where manufacturer's standard printed data is included in the manuals, include only sheets that are pertinent to the part or product installed. Mark each sheet to identify each part or product included in the installation. Where more than one item in a tabular format is included, identify each item, using appropriate references from the Contract Documents. Identify data that is applicable to the installation and delete references to information that is not applicable.

1. Manufacturer's Data: Provide complete information on architectural products, including the following, as applicable:
   a. Manufacturer's Catalog Number
   b. Size
   c. Material Composition
   d. Color
   e. Texture
   f. Re-ordering Information for Specially Manufactured Products
2. Care and Maintenance Instructions: Provide information on care and maintenance, including manufacturer's recommendations for types of cleaning agents to be used and methods of cleaning. Provide information regarding cleaning agents and methods that could prove detrimental to the product. Include manufacturer's recommended schedule for cleaning and maintenance.

Reviewed for Code Compliance
Inspections Division
Approved with Conditions
Date: 10/31/17

3. Color Schedules: Provide information showing manufacturer's color name and cata number for all exposed finishes, including paint, carpet, wallcoverings, and other fin materials.

4. Moisture-Protection and Weather-Exposed Products: Provide complete manufacturer's data with instructions on inspection, maintenance and repair of products exposed to the weather or designed for moisture-protection purposes.

   a. Manufacturer's Data: Provide manufacturer's data giving detailed information, including the following, as applicable:

      1) Applicable standards

      2) Chemical composition

      3) Installation details

      4) Inspection procedures

      5) Maintenance information

      6) Repair procedures

G. Equipment and Systems: Provide the following information for each piece of equipment, each building operating system, and each electric or electronic system.

1. Description: Provide a complete description of each unit and related component parts, including the following:

   a. Equipment or system function

   b. Operating characteristics

   c. Limiting conditions

   d. Performance curves

   e. Engineering data and tests

   f. Complete nomenclatures and number of replacement parts

2. Manufacturer's Information: For each manufacturer of a component part or piece of equipment, provide the following:

   a. Printed operating and maintenance instructions.

   b. Assembly drawings and diagrams required for maintenance.

   c. Recommended parts inventory listing.

3. Provide information detailing essential maintenance procedures, including the following:

   a. Routine operations

   b. Trouble-shooting guide

   c. Disassembly, repair and reassembly

   d. Alignment, adjusting and checking

4. Operating Procedures: Provide information on equipment and system operating procedures, including the following:

Reviewed for Code Compliance
Inspections Division
Approved with Conditions
Date: 10/31/17

a. Start-up procedures

b. Equipment or system break-in

c. Routine and normal operating instructions

d. Regulation and control procedures

e. Instructions on stopping

f. Shut-down and emergency instructions

g. Day and night operating instructions

h. Summer and winter operating instructions

i. Required sequences for pneumatic, electric, electronic or direct digital control systems

j. Special operating instructions

5. Servicing Schedule: Provide a schedule of routine servicing and lubrication requirements, including a list of required lubricants for equipment with moving parts.

6. Controls: Provide a comprehensive description of the sequence of operation and as-installed control diagrams by the control manufacturer for systems requiring controls.

7. Drawings: Provide copies of each Contractor/Subcontractor set of coordination drawings.

8. Valve Tags: Provide charts of valve tag numbers with the room number location and function of each valve. Valve tag locations shall be clearly indicated on the set of record "As-Built" drawings.

9. Circuit Directories: For electric and electronic systems, provide complete circuit directories of panelboards, including the following:

a. Electric power

b. Lighting

c. Communications

d. Fire Alarm

H. Written Test: Where manufacturer's standard printed data is not available, and information is necessary for proper operation and maintenance of equipment or systems, or it is necessary to provide additional information to supplement data included in the manual, prepare written text to provide necessary information. Organize the text in a consistent format under separate headings for different procedures. Where necessary, provide a logical sequence of instruction for each operating or maintenance procedure.

I. Drawings: Provide specially prepared drawings where necessary to supplement manufacturer's printed data to illustrate the relationship of component parts of equipment or systems, or to provide control or flow diagrams. Coordinate these drawings with information contained in Project Record Drawings to assure correct illustration of the completed installation. Do not use original Project Record Documents as part of the Operating and Maintenance Manuals.

Reviewed for Code Compliance
Inspections Division
Approved with Conditions
Date: 10/31/17

J. Warranties, Bonds, and Service Contracts: Provide a photocopy of each warranty, bond, service contract in the appropriate manual for the information of the Owner's operat personnel. Provide written data outlining procedures to be followed in the event of product failure including the return policies/procedures. List circumstances and conditions that would affect validly of the warranty or bond. Commencement and expiration dates shall be clearly indicated.

K. Provide complete information in the manual on products specified in Divisions 02 through 33.

1.04 TRAINING OF OPERATING AND MAINTENANCE PERSONNEL

A. Prior to final inspection, instruct the hotel personnel in operation, adjustment, and maintenance of products, equipment and systems.

1. Use operation and maintenance manuals for each piece of equipment or system as the basis of instruction. Review contents in detail to explain all aspects of operation and maintenance.

2. Refer to Specification Section 01 79 00, "Training", for detailed training requirements

1.05 OPERATING MAINTENANCE MANUALS

A. Submit copies of each manual, in the form specified, to the Owner for distribution.

1. Refer to individual Specification Sections and other paragraphs within this Section for additional requirements.

B. Manuals should be organized into separate and distinct volumes (binders) as described hereafter:

1. "SITE WORK"

a. Asphalt Concrete Pavement

b. Tack and Prime Coat

c. Concrete Curbs and Sidewalks

d. Pavement Markings

e. Guide Rail

f. Termite Control

g. Traffic Signage

2. "SITE WORK UTILITIES"

a. Water and Sanitary Sewer Facilities

b. Drainage Structures

c. Underdrains

d. Electrical Power Service

e. Gas Utility

3. "Landscape and Site Improvements"

a. Soil Preparation and Seeding

Reviewed for Code Compliance
Inspections Division
Approved with Conditions
Date: 10/31/17

b. Trees, Plants, and Ground Cover
c. Fences and Gates
d. Playfields and Equipment
e. Site and Street Furnishings

4. "BUILDINGS AND STRUCTURES"
   a. Concrete
   b. Unit Masonry
   c. Metals
   d. Woods and Plastics
   e. Thermal and Moisture Protection
   f. Doors and Windows
   g. Finishes
   h. Specialties
   i. Fixtures, Furnishings, and Equipment
5. "WAYFINDING"
   a. Exterior Signage
   b. Exterior Post/Panel and Overhead Panel Signs
6. "SWIMMING POOLS AND SPAS"
   a. Basic Piping and Pumps
   b. Filtering and Deck Equipment
   c. Pool Heater and Controls
   d. Chemical Treatment
7. "HYDRAULIC ELEVATORS"
8. "MECHANICAL, HVAC"
   a. Basic Materials and Methods
   b. Piping and Specialties
   c. Insulation
   d. Pumping
   e. Refrigeration
   f. Air Handling and Distribution
   g. Automatic Temperature Control
   h. Testing/Adjusting/Balancing
9. "MECHANICAL, PLUMBING"
   a. Basic Materials and Methods

Reviewed for Code Compliance
Inspections Division
Approved with Conditions
Date: 10/31/17

b. Piping and Specialties
c. Insulation
d. Fixtures/Trim/Accessories
e. Water Heaters
f. In-Line Circulating Pumps
g. Water Softening Equipment

10. "FIRE SPRINKLERS"
    a. Basic Materials and Methods
    b. Standpipe and Hose Systems
    c. Fire Pumps
    d. Dry Pipe Sprinkler Systems
    e. Wet Pipe Sprinkler Systems
11. "ELECTRICAL"
    a. Basic Materials and Methods
    b. Service and Distribution
        1) Service Entrance
        2) Switchboards
        3) Disconnects
        4) Grounding
        5) Transformers
        6) Panelboards
        7) Overcurrent Protective Devices
        8) Contactors
        9) Voltage Surge Suppression
        10) Heat Tracing
    c. Lighting
        1) Interior and Exterior Luminaries, Lamps and Accessories
        2) Emergency Lighting
        3) Lighting Control Equipment
12. "SOUND SYSTEMS"
13. "COMMUNICATIONS"
    a. Voice and Data
    b. Television Distribution System
    c. Security Intercom System

Reviewed for Code Compliance
Inspections Division
Approved with Conditions
Date: 10/31/17

14. "FIRE ALARM SYSTEM"

1.06 MAINTENANCE OF DOCUMENTS AND SAMPLES: Store Record Documents and Samples in the field office apart from Contract Documents used for construction. Do not permit Project Record Documents to be used for construction purposes. Maintain Record Documents in good order and in a clean, dry, legible condition. Make Documents and Samples available at all times for inspection by the Owner's Representative or Architect.

PART 2 PRODUCTS

Not Used

PART 3 EXECUTION

Not Used

END OF SECTION

Reviewed for Code Compliance
Inspections Division
Approved with Conditions
Date: 10/31/17

SECTION 03300

CAST-IN-PLACE CONCRETE

PART 1 - GENERAL

1.1 RELATED DOCUMENTS

A. Drawings and general provisions of the Contract, including General and Supplementary Conditions and Division 1 Specification Sections, apply to this Section.

1.2 SUMMARY

A. This Section specifies cast-in place concrete, including formwork, reinforcement, concrete materials, mix design, placement procedures, and finishes.

B. Related Sections include the following:
1. Division 2 Section "Earthwork" for drainage fill under slabs-on-grade.
2. Division 2 Section "Cement Concrete Pavement" for concrete pavement and walks.

1.3 DEFINITIONS

A. Cementitious Materials: Portland cement alone or in combination with one or more of blended hydraulic cement, fly ash and other pozzolans, ground granulated blast-furnace slag, and silica fume.

1.4 SUBMITTALS

A. Product Data: For each type of manufactured material and product indicated.

B. Design Mixes: For each concrete mix. Include alternate mix designs when characteristics of materials, project conditions, weather, test results, or other circumstances warrant adjustments. Each mix design will also indicate where concrete will be used.

1. Indicate amounts of mix water to be withheld for later addition at Project site.

C. Steel Reinforcement Shop Drawings: Details of fabrication, bending, and placement, prepared according to ACI 315, "Details and Detailing of Concrete Reinforcement." Include material, grade, bar schedules, stirrup spacing, bent bar diagrams, arrangement, and supports of concrete reinforcement. Setting Drawings shall be complete in showing and identifying by mark or otherwise all the bars to be incorporated into the work. Reinforcement of concrete walls shall be shown on wall elevations and reinforcement of beams shall be shown on beam elevations with sections as required. Elevations of walls and beams shall be at least 1/4 inch scale.

Reviewed for Code Compliance
Inspections Division
Approved with Conditions
Date: 10/31/17

D. Material Test Reports: From a qualified testing agency indicating and interpreting test results for compliance of the following with requirements indicated, based on comprehensive testing of current materials:

E. Anchor Bolt Survey: Stamped Survey Plan of Anchor Bolt As-Built.

F. Recycled: Provide manufacturer's product data on post-consumer recycled content and post-industrial recycled content as a percentage of the full product composite.

G. Regional: Provide manufacturer's product data indicating the locations and distance from project where product was manufactured and where the primary raw materials were extracted, harvested or recovered.

H. Provide costs for all materials separate from labor costs.

1.5 QUALITY ASSURANCE

A. Installer Qualifications: An experienced installer who has completed concrete Work similar in material, design, and extent to that indicated for this Project and whose work has resulted in construction with a record of successful in-service performance.

B. Manufacturer Qualifications: A firm experienced in manufacturing ready-mixed concrete products complying with ASTM C 94 requirements for production facilities and equipment.

1. Manufacturer must be certified according to the National Ready Mixed Concrete Association's Certification of Ready Mixed Concrete Production Facilities.

C. Supplier Testing Agency Qualifications: An independent testing agency, acceptable to authorities having jurisdiction, qualified according to ASTM C 1077 and ASTM E 329 to conduct the testing indicated, as documented according to ASTM E 548.

1. Personnel conducting field tests shall be qualified as ACI Concrete Field Testing Technician, Grade 1, according to ACI CP-1 or an equivalent certification program.

D. Source Limitations: Obtain each type or class of cementitious material of the same brand from the same manufacturer's plant, each aggregate from one source, and each admixture from the same manufacturer.

E. ACI Publications: Comply with the following, unless more stringent provisions are indicated:

1. ACI 301, "Specification for Structural Concrete."
2. ACI 117, "Specifications for Tolerances for Concrete Construction and Materials."

1.6 DELIVERY, STORAGE, AND HANDLING

A. Deliver, store, and handle steel reinforcement to prevent bending and damage.

Reviewed for Code Compliance
Inspections Division
Approved with Conditions
Date: 10/31/17

PART 2 - PRODUCTS

2.1 FORM-FACING MATERIALS

A. Smooth-Formed Finished Concrete: Form-facing panels that will provide continuous, true, and smooth concrete surfaces. Furnish in largest practicable sizes to minimize number of joints.

B. Chamfer Strips: Wood, metal, PVC, or rubber strips, 3/4 by 3/4 inch (19 by 19 mm), minimum.

C. Form-Release Agent: Commercially formulated form-release agent that will not bond with, stain, or adversely affect concrete surfaces and will not impair subsequent treatments of concrete surfaces.

D. Form Ties: Factory-fabricated, removable or snap-off metal or glass-fiber-reinforced plastic form ties designed to resist lateral pressure of fresh concrete on forms and to prevent spalling of concrete on removal.

1. Furnish units that will leave no corrodible metal closer than 1 inch (25 mm) to the plane of the exposed concrete surface.
2. Furnish ties that, when removed, will leave holes not larger than 1 inch (25 mm) in diameter in concrete surface.

2.2 STEEL REINFORCEMENT

A. Reinforcing Bars: ASTM A 615/A 615M, Grade 60 (Grade 420), deformed.

B. Plain-Steel Wire: ASTM A 82.

C. Plain-Steel Welded Wire Fabric: ASTM A 185, fabricated from as-drawn steel wire into flat sheets.

2.3 REINFORCEMENT ACCESSORIES

A. Bar Supports: Bolsters, chairs, spacers, and other devices for spacing, supporting, and fastening reinforcing bars and welded wire fabric in place. Manufacture bar supports according to CRSI's "Manual of Standard Practice" from steel wire, plastic, or precast concrete or fiber-reinforced concrete of greater compressive strength than concrete, and as follows:

1. For concrete surfaces exposed to view where legs of wire bar supports contact forms, use CRSI Class 1 plastic-protected or CRSI Class 2 stainless-steel bar supports.

2. For chairs supporting reinforcement above soil, provide sand plates to properly support bars.

B. Slab On Grade Construction Joint Dowel Bars: Plain-steel bars, ASTM A 615/A 615M, Grade 60 (Grade 420). Cut bars true to length with ends square and free of burrs.

Reviewed for Code Compliance
Inspections Division
Approved with Conditions
Date: 10/31/17

2.4 CONCRETE MATERIALS

A. Portland Cement: ASTM 150, Type I/II.

B. Normal-Weight Aggregate: ASTM C 33, uniformly graded, and as follows:
   1. Combined Aggregate Gradation: Well graded from coarsest to finest with not more than 18 percent and not less than 8 percent retained on an individual sieve, except that less than 8 percent may be retained on coarsest sieve and on No. 50 (0.3-mm) sieve, and less than 8 percent may be retained on sieves finer than No. 50 (0.3 mm).

C. Water: Potable and complying with ASTM C 94.

2.5 ADMIXTURES

A. General: Admixtures certified by manufacturer to contain not more than 0.1 percent water-soluble chloride ions by mass of cementitious material and to be compatible with other admixtures and cementitious materials. Do not use admixtures containing calcium chloride.

B. Air-Entraining Admixture: ASTM C 260.

C. Water-Reducing Admixture: ASTM C 494, Type A.

D. High-Range, Water-Reducing Admixture: ASTM C 494, Type F.

E. Water-Reducing and Accelerating Admixture: ASTM C 494, Type E.

F. Water-Reducing and Retarding Admixture: ASTM C 494, Type D.

G. Concrete moisture vapor reduction admixture for interior slab on grade construction shall be Barrier One, Inc.

2.6 VAPOR RETARDERS

A. Vapor Retarder
   1. Vapor Retarder membrane must have the following qualities

a.	Water Vapor Transmission Rate	ASTM E 96	0.01 Perms or lower
b.	Water Vapor Retarder	ASTM E 1745	Meets or Exceeds Class C
c.	Thickness of Retarder (plastic)	ACI 302.1R-96	Not less than 15 mils

B. Sheet Vapor Retarder Adhesive Tap: Manufactured adhesive tape consisting of a UV-resistant, biaxially-oriented polypropylene backing film that is coated with a clear acrylic pressure-sensitive adhesive.
   1. Products: Subject to compliance with requirements, available products that may be incorporated into the Work include, but are not limited to, the following:
      a. Cantech Industries, Inc.; Tuck 205-02 Contractor's Sheathing Tape.
      b. DuPont: Tyvek Tape.

Reviewed for Code Compliance
Inspections Division
Approved with Conditions
Date: 10/31/17

C. Granular Fill: Clean mixture of crushed stone or crushed or uncrushed gravel; ASTM D 4 Size 57, with 100 percent passing a 1-1/2-inch (38-mm) sieve and 0 to 5 percent passing a No. 8 (2.36-mm) sieve.

2.7 FLOOR AND SLAB TREATMENTS

A. Slip-Resistive Aggregate Finish: Factory-graded, packaged, rustproof, nonglazing, abrasive aggregate of fused aluminum-oxide granules or crushed emery with emery aggregate containing not less than 50 percent aluminum oxide and not less than 25 percent ferric oxide; unaffected by freezing, moisture, and cleaning materials.

2.8 CURING MATERIALS

A. Moisture-Retaining Cover: ASTM C 171, polyethylene film or white burlap-polyethylene sheet.

B. Water: Potable.

C. Clear, Waterborne, Membrane-Forming Curing and Sealing Compound: ASTM C 1315, Type 1, Class A.

2.9 RELATED MATERIALS

A. Joint-Filler Strips: ASTM D 1751, asphalt-saturated cellulosic fiber.

B. Epoxy Joint Filler: Two-component, semirigid, 100 percent solids, epoxy resin with a Shore A hardness of 80 per ASTM D 2240.

C. Bonding Agent: ASTM C 1059, Type II, non-redispersible, acrylic emulsion or styrene butadiene.

2.10 CONCRETE MIXES

A. Prepare design mixes for each type and strength of concrete determined by either laboratory trial mix or field test data bases, as follows:

1. Proportion normal-weight concrete according to ACI 211.1 and ACI 301.
2. Proportion lightweight structural concrete according to ACI 211.2 and ACI 301.

B. Footings and Foundation Walls: Proportion normal-weight concrete mix as follows:

1. Compressive Strength (28 Days): Refer to plans.
2. Maximum Slump for Concrete Containing High-Range Water-Reducing Admixture: 8 inches (200 mm) after admixture is added to concrete with 2- to 4-inch (50- to 100-mm) slump.

C. Slab-on-Grade: Proportion normal-weight concrete mix as follows:

Reviewed for Code Compliance
Inspections Division
Approved with Conditions
Date: 10/31/17

1. Compressive Strength (28 Days): Refer to plans.
2. Maximum Slump: 4 inches (100 mm) before adding additives.

D. Cementitious Materials: For concrete exposed to deicers, limit percentage, by weight, of cementitious materials other than portland cement according to ACI 301 requirements.

E. Cementitious Materials: Limit percentage, by weight, of cementitious materials other than portland cement in concrete as follows:

1. Combined Fly Ash and Pozzolan: 25 percent.

F. Maximum Water-Cementitious Materials Ratio: 0.45 for concrete exposed to deicers or subject to freezing and thawing while moist.

G. Air Content: Where required, add air-entraining admixture at manufacturer's prescribed rate to result in concrete at point of placement having an air content as follows within a tolerance of plus 1 or minus 1.5 percent, unless otherwise indicated:

1. Air Content: 6 percent for 3/4-inch- (19-mm-) nominal maximum aggregate size.

H. Do not air entrain concrete to trowel-finished interior floors and suspended slabs. Do not allow entrapped air content to exceed 2 percent.

I. Admixtures: Use admixtures according to manufacturer's written instructions.

1. Use water-reducing admixture in concrete, as required, for placement and workability.
2. Use water-reducing and retarding admixture when required by high temperatures, low humidity, or other adverse placement conditions.
3. Use water-reducing admixture in pumped concrete, concrete for heavy-use industrial slabs, concrete required to be watertight, and concrete with a water-cementitious materials ratio below 0.50.

2.11 FABRICATING REINFORCEMENT

A. Fabricate steel reinforcement according to CRSI's "Manual of Standard Practice."

2.12 CONCRETE MIXING

A. Ready-Mixed Concrete: Measure, batch, mix, and deliver concrete according to ASTM C 94 and ASTM C 1116, and furnish batch ticket information.

1. When air temperature is between 85 and 90 deg F (30 and 32 deg C), reduce mixing and delivery time from 1-1/2 hours to 75 minutes; when air temperature is above 90 deg F (32 deg C), reduce mixing and delivery time to 60 minutes.

PART 3 - EXECUTION

Reviewed for Code Compliance
Inspections Division
Approved with Conditions
Date: 10/31/17

3.1 FORMWORK

A. Design, erect, shore, brace, and maintain formwork, according to ACI 301, to support vertical, lateral, static, and dynamic loads, and construction loads that might be applied, until concrete structure can support such loads.

B. Construct formwork so concrete members and structures are of size, shape, alignment, elevation, and position indicated, within tolerance limits of ACI 117.

C. Limit concrete surface irregularities, designated by ACI 347R as abrupt or gradual, as follows:

1. Class B, 1/4 inch (6 mm).

D. Construct forms tight enough to prevent loss of concrete mortar.

E. Chamfer edges of permanently exposed concrete, as indicated on the drawings.

F. Form openings, chases, offsets, sinkages, keyways, reglets, blocking, screeds, and bulkheads required in the Work. Determine sizes and locations from trades providing such items.

G. Clean forms and adjacent surfaces to receive concrete. Remove chips, wood, sawdust, dirt, and other debris just before placing concrete.

H. Retighten forms and bracing before placing concrete, as required, to prevent mortar leaks and maintain proper alignment.

I. Coat contact surfaces of forms with form-release agent, according to manufacturer's written instructions, before placing reinforcement.

3.2 EMBEDDED ITEMS

A. Place and secure anchorage devices and other embedded items required for adjoining work that is attached to or supported by cast-in-place concrete. Use Setting Drawings, templates, diagrams, instructions, and directions furnished with items to be embedded.

1. Install anchor bolts, accurately located, to elevations required. All anchor bolts shall be dryset (set prior to placement – wetsetting is unacceptable).

3.3 REMOVING AND REUSING FORMS

A. General: Formwork, for sides of beams, walls, columns, and similar parts of the Work, that does not support weight of concrete may be removed after cumulatively curing at not less than 50 deg F (10 deg C) for 24 hours after placing concrete provided concrete is hard enough to not be damaged by form-removal operations and provided curing and protection operations are maintained.

Reviewed for Code Compliance
Inspections Division
Approved with Conditions
Date: 10/31/17

B. Clean and repair surfaces of forms to be reused in the Work. Split, frayed, delaminated, otherwise damaged form-facing material will not be acceptable for exposed surfaces. Apply new form-release agent.

C. When forms are reused, clean surfaces, remove fins and laitance, and tighten to close joints. Align and secure joints to avoid offsets. Do not use patched forms for exposed concrete surfaces unless approved by Architect.

3.4 VAPOR RETARDERS

A. Vapor Retarder: Place, protect, and repair vapor-retarder sheets according to ASTM E 1643 and manufacturer's written instructions. Level and tamp or roll granular base as specified elsewhere drawings. Unroll vapor retarder with the longest dimension parallel with the direction of the pour and pull out the folds to the 14' width. Lap vapor retarder over the footings and seal to the vertical foundation walls with specified tape. Seal around pipes, support columns or any other penetration creating a monolithic membrane between the surface of the slab and moisture sources below and at the slab perimeter. Seal holes or openings through 15-mil vapor retarder to maintain the integrity of the vapor barrier. Overlap joints a minimum of six inches. Seal overlap with tape recommended by vapor retarder manufacturer. When installing reinforcing steel and utilities in addition to the placement of concrete, take precaution to protect the vapor retarder. Place standard reinforcing bar supports on vapor retarder. Avoid driving stakes through vapor retarder. If this cannot be avoided, each individual hole must be repaired.

B. Granular Fill: Place vapor retarder over 8” of granular fill compacted with mechanical equipment to elevation tolerances of plus 0 inch (0 mm) or minus 3/4 inch (19 mm).

C. Dispense Barrier-1 admixture at a rate of 14 oz per 100 lbs. of cementitious materials at the tail end of the load, dose to be within plus or minus 3 percent. Additional dosage may be required based on the mix design.
   1. Add Barrier-1 Admixture to ready mix concrete truck, in the required dosage, and mix for 7 (seven) minutes before discharge. Barrier-1 Admixture is to be used in lieu of designed mix water, not in addition to mix water.
   2. A water-to-cementitious material ratio (w/cm) of 0.42 to 0.52 is critical and it is imperative to comply with the mix design.

3.5 STEEL REINFORCEMENT

A. General: Comply with CRSI's "Manual of Standard Practice" for placing reinforcement.

   1. Do not cut or puncture vapor retarder. Repair damage and reseal vapor retarder before placing concrete.

B. Clean reinforcement of loose rust and mill scale, earth, ice, and other foreign materials.

Reviewed for Code Compliance
Inspections Division
Approved with Conditions
Date: 10/31/17

C. Accurately position, support, and secure reinforcement against displacement. Locate and support reinforcement with bar supports to maintain minimum concrete cover. Do not tack weld crossing reinforcing bars.

D. Set wire ties with ends directed into concrete, not toward exposed concrete surfaces.

E. Install welded wire fabric in longest practicable lengths on bar supports spaced to minimize sagging. Lap edges and ends of adjoining sheets at least one mesh spacing. Offset laps of adjoining sheet widths to prevent continuous laps in either direction. Lace overlaps with wire. Use sand chair supports at slabs on grade.

3.6 JOINTS

A. General: Construct joints true to line with faces perpendicular to surface plane of concrete.

B. Construction Joints: Install so strength and appearance of concrete are not impaired, at locations indicated or as approved by Architect.

1. Place joints perpendicular to main reinforcement. Continue reinforcement across construction joints, unless otherwise indicated. Do not continue reinforcement through sides of strip placements of floors and slabs.
2. Form from preformed galvanized steel, plastic keyway-section forms, or bulkhead forms with keys, unless otherwise indicated. Embed keys at least 1-1/2 inches (38mm) into concrete.
3. Space vertical joints in walls as indicated. Locate joints beside piers integral with walls, near corners, and in concealed locations where possible.
4. Use neat cement slurry at locations where fresh concrete is placed against hardened or partially hardened concrete surfaces.

C. Contraction Joints in Slabs-on-Grade: Form weakened-plane contraction joints, sectioning concrete into areas as indicated. Construct contraction joints for a depth equal to at least one-fourth of concrete thickness, as follows:

1. Sawed Joints: Form contraction joints with power saws equipped with shatterproof abrasive or diamond-rimmed blades. Cut 1/8-inch- (3-mm-) wide joints into concrete when cutting action will not tear, abrade, or otherwise damage surface and before concrete develops random contraction cracks.

D. Slab On Grade Construction Joints: Install dowel sleeves and dowels or dowel bar and support assemblies at joints where indicated. Refer to drawings for details.

1. Construction joints shall be saw-cut and filled with joint filler.

3.7 CONCRETE PLACEMENT

A. Before placing concrete, verify that installation of formwork, reinforcement, and embedded items is complete and that required inspections have been performed.

Reviewed for Code Compliance
Inspections Division
Approved with Conditions
Date: 10/31/17

B. Before placing concrete, water may be added at Project site, subject to limitations of ACI 30

1. Do not add water to concrete after adding high-range water-reducing admixtures to mix.

C. Deposit concrete continuously or in layers of such thickness that no new concrete will be placed on concrete that has hardened enough to cause seams or planes of weakness. If a section cannot be placed continuously, provide construction joints as specified. Deposit concrete to avoid segregation.

D. Deposit concrete in forms in horizontal layers no deeper than 24 inches (600 mm) and in a manner to avoid inclined construction joints. Place each layer while preceding layer is still plastic, to avoid cold joints.

1. Consolidate placed concrete with mechanical vibrating equipment. Use equipment and procedures for consolidating concrete recommended by ACI 309R.
2. Do not use vibrators to transport concrete inside forms. Insert and withdraw vibrators vertically at uniformly spaced locations no farther than the visible effectiveness of the vibrator. Place vibrators to rapidly penetrate placed layer and at least 6 inches (150 mm) into preceding layer. Do not insert vibrators into lower layers of concrete that have begun to lose plasticity. At each insertion, limit duration of vibration to time necessary to consolidate concrete and complete embedment of reinforcement and other embedded items without causing mix constituents to segregate.

E. Deposit and consolidate concrete for floors and slabs in a continuous operation, within limits of construction joints, until placement of a panel or section is complete.

1. Consolidate concrete during placement operations so concrete is thoroughly worked around reinforcement and other embedded items and into corners.
2. Maintain reinforcement in position on chairs during concrete placement.
3. Screed slab surfaces with a straightedge and strike off to correct elevations.
4. Slope surfaces uniformly to drains where required.
5. Begin initial floating using bull floats or darbies to form a uniform and open-textured surface plane, free of humps or hollows, before excess moisture or bleedwater appears on the surface. Do not further disturb slab surfaces before starting finishing operations.

F. Cold-Weather Placement: Comply with ACI 306.1 and as follows. Protect concrete work from physical damage or reduced strength that could be caused by frost, freezing actions, or low temperatures.

1. When air temperature has fallen to or is expected to fall below 40 deg F (4.4 deg C), uniformly heat water and aggregates before mixing to obtain a concrete mixture temperature of not less than 50 deg F (10 deg C) and not more than 80 deg F (27 deg C) at point of placement.
2. Do not use frozen materials or materials containing ice or snow. Do not place concrete on frozen subgrade or on subgrade containing frozen materials.
3. Do not use calcium chloride, salt, or other materials containing antifreeze agents or chemical accelerators, unless otherwise specified and approved in mix designs.

Reviewed for Code Compliance
Inspections Division
Approved with Conditions
Date: 10/31/17

G. Hot-Weather Placement: Place concrete according to recommendations in ACI 305R and follows, when hot-weather conditions exist:

1. Cool ingredients before mixing to maintain concrete temperature below 90 deg F (32 deg C) at time of placement. Chilled mixing water or chopped ice may be used to control temperature, provided water equivalent of ice is calculated to total amount of mixing water. Using liquid nitrogen to cool concrete is Contractor's option.
2. Cover steel reinforcement with water-soaked burlap so steel temperature will not exceed ambient air temperature immediately before embedding in concrete.
3. Fog-spray forms, steel reinforcement, and subgrade just before placing concrete. Keep subgrade moisture uniform without standing water, soft spots, or dry areas.

3.8 FINISHING FORMED SURFACES

A. Rough-Formed Finish: As-cast concrete texture imparted by form-facing material with tie holes and defective areas repaired and patched. Remove fins and other projections exceeding ACI 347R limits for class of surface specified. Use at areas not exposed to view.

B. Smooth-Formed Finish: As-cast concrete texture imparted by form-facing material, arranged in an orderly and symmetrical manner with a minimum of seams. Repair and patch tie holes and defective areas. Remove fins and other projections exceeding 1/8 inch (3 mm) in height.

1. Apply to concrete surfaces exposed to public view or to be covered with a coating or covering material applied directly to concrete, such as waterproofing, dampproofing, veneer plaster, or painting.
2. Do not apply rubbed finish to smooth-formed finish.

C. Rubbed Finish: Apply the following to smooth-formed finished concrete, as indicated on plans:

1. Smooth-Rubbed Finish: Not later than one day after form removal, moisten concrete surfaces and rub with carborundum brick or another abrasive until producing a uniform color and texture. Do not apply cement grout other than that created by the rubbing process.

D. Related Unformed Surfaces: At tops of walls, horizontal offsets, and similar unformed surfaces adjacent to formed surfaces, strike off smooth and finish with a texture matching adjacent formed surfaces. Continue final surface treatment of formed surfaces uniformly across adjacent unformed surfaces, unless otherwise indicated.

3.9 FINISHING FLOORS AND SLABS

A. General: Comply with recommendations in ACI 302.1R for screeding, restraightening, and finishing operations for concrete surfaces. Do not wet concrete surfaces.

B. Float Finish: Consolidate surface with power-driven floats or by hand floating if area is small or inaccessible to power driven floats. Restraighten, cut down high spots, and fill low spots. Repeat float passes and restraightening until surface is left with a uniform, smooth, granular texture.

Reviewed for Code Compliance
Inspections Division
Approved with Conditions
Date: 10/31/17

1. Apply float finish to surfaces indicated, to surfaces to receive trowel finish.

C. Trowel Finish: After applying float finish, apply first trowel finish and consolidate concrete by hand or power-driven trowel. Continue troweling passes and restraighten until surface is free of trowel marks and uniform in texture and appearance. Grind smooth any surface defects that would telegraph through applied coatings or floor coverings.

1. Apply a trowel finish to surfaces indicated and to floor and slab surfaces exposed to view or to be covered with resilient flooring, carpet, ceramic or quarry tile set over a cleavage membrane, paint, or another thin film-finish coating system
2. Finish surfaces to the following tolerances, measured within 24 hours according to ASTM E 1155/E 1155M for a randomly trafficked floor surface:

   a. Specified overall values of flatness, F(F) 25; and levelness, F(L) 20; with minimum local values of flatness, F(F) 17; and levelness, F(L) 15 for slabs-on-grade.

   b. Specified overall values of flatness, F(F) 25; for elevated slabs on steel beams and metal deck (equivalent to ¼" gap under 10-foot straightedge). Elevated slab elevations shall be set by lasers taking in consideration that beams and deck shall deflect due to dead load.

D. Trowel and Fine-Broom Finish: Apply a partial trowel finish, stopping after second troweling, to surfaces indicated and to surfaces where ceramic or quarry tile is to be installed by either thickset or thin-set method. Immediately after second troweling, and when concrete is still plastic, slightly scarify surface with a fine broom.

E. Broom Finish: Apply a broom finish to exterior concrete platforms, steps, and ramps, and elsewhere as indicated.

1. Immediately after float finishing, slightly roughen trafficked surface by brooming with fiber-bristle broom perpendicular to main traffic route. Coordinate required final finish with Architect before application.

3.10 MISCELLANEOUS CONCRETE ITEMS

A. Filling In: Fill in holes and openings left in concrete structures, unless otherwise indicated, after work of other trades is in place. Mix, place, and cure concrete, as specified, to blend with in-place construction. Provide other miscellaneous concrete filling indicated or required to complete Work.

B. Equipment Bases and Foundations: Provide machine and equipment bases and foundations as shown on Drawings. Set anchor bolts for machines and equipment at correct elevations, complying with diagrams or templates of manufacturer furnishing machines and equipment.

3.11 CONCRETE PROTECTION AND CURING

Reviewed for Code Compliance
Inspections Division
Approved with Conditions
Date: 10/31/17

A. General: Protect freshly placed concrete from premature drying and excessive cold or l temperatures. Comply with ACI 306.1 for cold-weather protection and with recommendations in ACI 305R for hot-weather protection during curing.

B. Evaporation Retarder: Apply evaporation retarder to unformed concrete surfaces if hot, dry, or windy conditions cause moisture loss approaching 0.2 lb/sq. ft. x h (1 kg/sq. m x h) before and during finishing operations. Apply according to manufacturer's written instructions after placing, screeding, and bull floating or darbying concrete, but before float finishing.

C. Unformed Surfaces: Begin curing immediately after finishing concrete. Cure unformed surfaces, including floors and slabs, by one or a combination of the following methods:

1. Moisture Curing: Keep surfaces continuously moist for not less than seven days with the following materials:

   a. Water.
   b. Continuous water-fog spray.
   c. Absorptive cover, water saturated, and kept continuously wet. Cover concrete surfaces and edges with 12-inch (300-mm) lap over adjacent absorptive covers.

2. Moisture-Retaining-Cover Curing: Cover concrete surfaces with moisture-retaining cover for curing concrete, placed in widest practicable width, with sides and ends lapped at least 12 inches (300 mm), and sealed by waterproof tape or adhesive. Cure for not less than seven days. Immediately repair any holes or tears during curing period using cover material and waterproof tape.

   a. Moisture cure or use moisture-retaining covers to cure concrete surfaces to receive floor coverings.
   b. Moisture cure or use moisture-retaining covers to cure concrete surfaces to receive penetrating liquid floor treatments.
   c. Cure concrete surfaces to receive floor coverings with either a moisture-retaining cover or a curing compound that the manufacturer recommends for use with floor coverings.

3. Curing Compound: Apply uniformly in continuous operation by power spray or roller according to manufacturer's written instructions. Recoat areas subjected to heavy rainfall within three hours after initial application. Maintain continuity of coating and repair damage during curing period.
4. Curing and Sealing Compound: Apply uniformly to floors and slabs indicated in a continuous operation by power spray or roller according to manufacturer's written instructions. Recoat areas subjected to heavy rainfall within three hours after initial application. Repeat process 24 hours later and apply a second coat. Maintain continuity of coating and repair damage during curing period.

3.12 JOINT FILLING

A. Prepare, clean, and install joint filler according to manufacturer's written instructions.

Reviewed for Code Compliance
Inspections Division
Approved with Conditions
Date: 10/31/17

1. Defer joint filling until concrete has aged at least six months. Do not fill joints until construction traffic has permanently ceased.

B. Remove dirt, debris, saw cuttings, curing compounds, and sealers from joints; leave contact faces of joint clean and dry.

C. Install semirigid epoxy joint filler full depth in saw-cut joints and at least 1.5 inches deep in formed joints. Overfill joint and trim joint filler flush with top of joint after hardening.

3.13 CONCRETE SURFACE REPAIRS

A. Defective Concrete: Repair and patch defective areas when approved by Architect. Remove and replace concrete that cannot be repaired and patched to Architect's approval.

B. Patching Mortar: Mix dry-pack patching mortar, consisting of one part portland cement to two and one-half parts fine aggregate passing a No. 16 (1.2-mm) sieve, using only enough water for handling and placing.

C. Repairing Formed Surfaces: Surface defects include color and texture irregularities, cracks, spalls, air bubbles, honeycombs, rock pockets, fins and other projections on the surface, and stains and other discolorations that cannot be removed by cleaning.

1. Immediately after form removal, cut out honeycombs, rock pockets, and voids more than 1/2 inch (13 mm) in any dimension in solid concrete but not less than 1 inch (25 mm) in depth. Make edges of cuts perpendicular to concrete surface. Clean, dampen with water, and brush-coat holes and voids with bonding agent. Fill and compact with patching mortar before bonding agent has dried. Fill form-tie voids with patching mortar or cone plugs secured in place with bonding agent.
2. Repair defects on surfaces exposed to view by blending white portland cement and standard portland cement so that, when dry, patching mortar will match surrounding color. Patch a test area at inconspicuous locations to verify mixture and color match before proceeding with patching. Compact mortar in place and strike off slightly higher than surrounding surface.
3. Repair defects on concealed formed surfaces that affect concrete's durability and structural performance as determined by Architect.

D. Repairing Unformed Surfaces: Test unformed surfaces, such as floors and slabs, for finish and verify surface tolerances specified for each surface. Correct low and high areas. Test surfaces sloped to drain for trueness of slope and smoothness; use a sloped template.

1. Repair finished surfaces containing defects. Surface defects include spalls, popouts, honeycombs, rock pockets, crazing and cracks in excess of 0.01 inch (0.25 mm) wide or that penetrate to reinforcement or completely through unreinforced sections regardless of width, and other objectionable conditions.
2. After concrete has cured at least 14 days, correct high areas by grinding.
3. Correct localized low areas during or immediately after completing surface finishing operations by cutting out low areas and replacing with patching mortar. Finish repaired areas to blend into adjacent concrete.

Reviewed for Code Compliance
Inspections Division
Approved with Conditions
Date: 10/31/17

4. Correct other low areas scheduled to receive floor coverings with a repair underl ment. Prepare, mix, and apply repair underlayment and primer according to manufacturer's written instructions to produce a smooth, uniform, plane, and level surface. Feather edges to match adjacent floor elevations by removal and replacement.
5. Repair defective areas and low areas, except random cracks and single holes 1 inch (25 mm) or less in diameter, by cutting out and replacing with fresh concrete. Remove defective areas with clean, square cuts and expose steel reinforcement with at least 3/4 inch (19 mm) clearance all around. Dampen concrete surfaces in contact with patching concrete and apply bonding agent. Mix patching concrete of same materials and mix as original concrete except without coarse aggregate. Place, compact, and finish to blend with adjacent finished concrete. Cure in same manner as adjacent concrete.
6. Correct low areas scheduled to remain exposed by removal and replacement.

E. Perform structural repairs of concrete, subject to Architect's approval, using epoxy adhesive and patching mortar.

F. Repair materials and installation not specified above may be used, subject to Architect's approval.

3.14 FIELD QUALITY CONTROL

A. Testing Agency: Owner will engage a qualified independent testing and inspecting agency to sample materials, perform tests, and submit test reports during concrete placement. Sampling and testing for quality control may include those specified in this Article.

B. Testing Services: Testing of composite samples of fresh concrete obtained according to ASTM C 172 shall be performed according to the following requirements:

1. Testing Frequency: Obtain one composite sample for each day's pour of each concrete mix exceeding 5 cu. yd. (4 cu. m), but less than 25 cu. yd. (19 cu. m), plus one set for each additional 50 cu. yd. (38 cu. m) or fraction thereof.
2. Testing Frequency: Obtain at least one composite sample for each 100 cu. yd. (76 cu. m) or fraction thereof of each concrete mix placed each day.

    a. When frequency of testing will provide fewer than five compressive-strength tests for each concrete mix, testing shall be conducted from at least five randomly selected batches or from each batch if fewer than five are used.

3. Slump: ASTM C 143; one test at point of placement for each composite sample, but not less than one test for each day's pour of each concrete mix. Perform additional tests when concrete consistency appears to change.
4. Air Content: ASTM C 231, pressure method, for normal-weight concrete; ASTM C 173, volumetric method, for structural lightweight concrete; one test for each composite sample, but not less than one test for each day's pour of each concrete mix.
5. Concrete Temperature: ASTM C 1064; one test hourly when air temperature is 40 deg F (4.4 deg C) and below and when 80 deg F (27 deg C) and above, and one test for each composite sample.

Reviewed for Code Compliance
Inspections Division
Approved with Conditions
Date: 10/31/17

6. Unit Weight: ASTM C 567, fresh unit weight of structural lightweight concrete; one t for each composite sample, but not less than one test for each day's pour of each concrete mix.
7. Compression Test Specimens: ASTM C 31/C 31M; cast and laboratory cure one set of four standard cylinder specimens for each composite sample.

    a. Cast and field cure one set of four standard cylinder specimens for each composite sample.

8. Compressive-Strength Tests: ASTM C 39; test two laboratory-cured specimens at 7 days and two at 28 days.

    a. Test two field-cured specimens at 7 days and two at 28 days.
    b. A compressive-strength test shall be the average compressive strength from two specimens obtained from same composite sample and tested at age indicated.

C. When strength of field-cured cylinders is less than 85 percent of companion laboratory-cured cylinders, Contractor shall evaluate operations and provide corrective procedures for protecting and curing in-place concrete.

D. Strength of each concrete mix will be satisfactory if every average of any three consecutive compressive-strength tests equals or exceeds specified compressive strength and no compressive-strength test value falls below specified compressive strength by more than 500 psi (3.4 MPa).

E. Test results shall be reported in writing to Architect, the SER, concrete manufacturer, and Contractor within 48 hours of testing. Reports of compressive-strength tests shall contain Project identification name and number, date of concrete placement, name of concrete testing and inspecting agency, location of concrete batch in Work, design compressive strength at 28 days, concrete mix proportions and materials, compressive breaking strength, and type of break for both 7-and 28-day tests.

F. Nondestructive Testing: Impact hammer, sonoscope, or other nondestructive device may be permitted by Architect but will not be used as sole basis for approval or rejection of concrete.

G. Additional Tests: Testing and inspecting agency shall make additional tests of concrete when test results indicate that slump, air entrainment, compressive strengths, or other requirements have not been met, as directed by Architect. Testing and inspecting agency may conduct tests to determine adequacy of concrete by cored cylinders complying with ASTM C 42 or by other methods as directed by Architect.

END OF SECTION 03300

Reviewed for Code Compliance
Inspections Division
Approved with Conditions
Date: 10/31/17

SECTION 04200

UNIT MASONRY

1. GENERAL

1.1 DESCRIPTION OF WORK

A. Drawings and general provisions of Contract, including General Conditions and Division 1 specifications, apply to work in this section.

B. Extent of Unit Masonry is shown on the drawings.

C. In addition to work shown on the drawings and specified elsewhere in this Section, build in steel lintels, anchors, inserts and sleeves.

1.2 QUALITY ASSURANCE

A. Standards: Comply with recommendations of National Concrete Masonry Assoc. (NCMA).

1.3 SUBMITTALS

A. Issue submittals in accordance with Section 01300, Submittals.

B. Submit product data and installation recommendations for masonry units, cementitious products for mortar and grout, coloring pigments, through-wall flashing, and masonry accessories.

Part 2 - PRODUCTS

2.2 CONCRETE MASONRY UNITS

A. Except as shown on Drawings or specified otherwise, all concrete masonry units shall be as follows:

1. Hollow-type complying with ASTM C 90, Type 1 (moisture-controlled), Grade N with two (2) hour U.L. fire rating.

2. Compressive strength: 2500 psi net, 1250 psi gross (average of three units). Prism strength fm=2500 psi in Pier A, fm=2000 elsewhere.

3. Normal-weight, with sand and gravel aggregate complying with ASTM C 33, approximate oven-dry unit weight of 135 lbs. per cu. ft.

2.3 MORTAR AND GROUT

Reviewed for Code Compliance
Inspections Division
Approved with Conditions
Date: 10/31/17

A. Mortar shall comply with ASTM C 270, BIA Technical Notes 8 and 8A, and local Building Code.

B. Materials shall conform to applicable ASTM specifications including the following:

1. Portland Cement: ASTM 150, Types I, II, or III (do not use Types IA, IIA, or IIIA).

2. Masonry Cement: ASTM C 91.

3. Hydrated Lime: ASTM C 207, Type S only (do not use Type N).

4. Natural or manufactured sand aggregate: ASTM C 144, gradation conforming to Table 1 in BIA Technical Note 8.

5. Masonry cement shall not contain ground limestone.

6. Water: clean, potable, and free of deleterious amounts of acids, alkalies or organic materials.

C. Mortar Type

1. General:

c. Use 750 psi minimum Type N mortar or as recommended by manufacturer.

D. Grout

1. Grout shall conform to ASTM C 476. Architect will select grout color from a typical grout kit.

2. Fine and coarse aggregate for grout mixes shall be defined in ASTM C 404.

a. Fine grout shall consist of one part portland cement, 0 to 1/10 part lime, 2-1/4 to 3 parts fine sand.

b. Coarse grout shall consist of the fine grout mix described in "a" above plus 1 to 2 parts coarse aggregate.

c. Use coarse grout (pea gravel aggregate) except where minimum horizontal core dimension is under 4 in., in which case use fine grout (sand aggregate). Ordinary concrete (maximum 1 in. aggregate) may be used where minimum core dimension exceeds 6 inches.

E. During cold-weather construction use Type III (high-early strength) cement and Type S hydrated lime. A non-calcium-chloride-based accelerator such as Dur-o-Wal, Dur-o-Guard, or Euco Accelguard 80 may be used, in quantities recommended by manufacturer for expected

Reviewed for Code Compliance
Inspections Division
Approved with Conditions
Date: 10/31/17

ambient temperature. Calcium chloride may not be used. Refer to EXECUTION portion of tl Section for general provisions governing cold weather construction.

2.4 METAL REINFORCING, TIES, ANCHORS

A. Acceptable manufacturers: Heckmann Building Products, or approved equal.

2.5 MASONRY ACCESSORIES

A. Chemical cleaning agents for newly-installed masonry: ProSoco Sure-Klean liquid masonry cleaners or equal by Diedrich, as recommended by manufacturer for particular condition. Recommended cleaners include Sure-Klean No. 600 Detergent, No. 101 Lime Solvent, and Vana Trol.

3. EXECUTION

3.1 MASONRY WORK IN GENERAL

A. Erect all masonry work in compliance with the line and level tolerances specified herein. Correct, or replace, as directed by the Architect, non-conforming masonry work at no additional cost to the Contract.

B. Lay no concrete masonry unit having chipped edges or face defects where such unit or piece would be exposed to view. Remove any such unit or piece, if installed, replace with new matching material, and bear all costs therefore.

C. Examine all Drawings as to requirements for the accommodation of work of other trades. Provide all required recesses, chases, slots, cutouts, and set loose lintels. Place anchors, bolts, sleeves and other items occurring in the masonry work. Take every precaution to minimize future cutting and patching. Closely coordinate the location and placement of such items.

D. Protect all masonry from rain prior to, and during the installation thereof. If the temperature is in excess of 80 degrees F. at time of installation, lightly moisten contact surfaces or masonry units by brushing with water.

E. Lay all masonry in full mortar beds, and completely butter all concealed from view vertical edges with mortar. Completely fill cells of masonry units with mortar where vertical reinforcement is to be installed therein and in other locations specified or indicated on the Drawings.

F. Provide complete protection against breakage and weather damage to all masonry work, including substantial wood boxing around door jambs, over the tops of walls and wherever necessary to protect work at all stages of completion. Protect masonry when not roofed over, at all times when masons are not working on the walls. Apply non-staining tarpaulins or waterproof paper, properly weighted, or nailed, to assure their remaining in place to protect masonry from all possible hazards.

Reviewed for Code Compliance
Inspections Division
Approved with Conditions
Date: 10/31/17

G. Fit masonry into bucks and frames so as not to distort alignment of such items, and fill backs of such items with mortar, except where joints are indicated to receive caulking and sealant and have no compressible filler therein, in which case rake joints to a uniform depth of ¾ inch for proper installation of caulking and sealant material.

H. Use only power saw, equipped with carborundum blade, for cutting exposed masonry, as needed to assure straight, evenly-cut edges.

I. Lay out coursing before setting to minimize cutting closures or jumping bond. Do not spread any more mortar than can be covered before surface of mortar has begun to dry. Do not endanger bond or mortar by moving masonry when once laid. If necessary to re-adjust any items, remove entirely, clean-off mortar, and reset with fresh mortar.

J. Except for cleaning down and pointing, finish all new masonry as the walls and partitions are carried up.

K. Point and fill all holes and cracks in mortar joints with additional fresh mortar; do not merely spread adjacent mortar over defect or use dead mortar droppings. Do all pointing while mortar is still soft and plastic. If hardened, chisel defect out and refill solidly with fresh additional mortar, and tool as specified.

3.2 JOB CONDITIONS

A. Store cement, lime and other cementitious materials under cover in a dry place.

B. Keep steel reinforcing, ties and anchors free from oil, dirt, rust, and other materials which would destroy bond.

C. Store masonry above ground on level platforms which allow air circulation under stacked units. Masonry units shall be dry and free from soil and ice before being laid in wall.

D. Keep installed walls dry and clean at all times. Immediately remove grout or mortar from face of masonry to be left exposed or painted. Protect previously installed elements such as louvers, doors, frames, and windows from mortar droppings and construction damage, using masking elements, dropcloths, etc.

E. Cover exposed walls at end of working day with well-secured canvas tarpaulins. Protect base of exterior walls from splashing mud and mortar by spreading sand, straw, and sawdust or plastic sheeting 3 to 4 ft. horizontally and up face of wall. Turn scaffold boards near wall on edge at end of day to prevent splashing mortar or dirt.

F. Securely brace partially completed walls against wind damage. Walls shall have been completed 24 hours minimum before application of distributed loads, 72 hours before concentrated loads.

Reviewed for Code Compliance
Inspections Division
Approved with Conditions
Date: 10/31/17

G. Comply with cold-weather construction specifications in NCMA-TEK 16 and BIA Technical Note 1A:

1. Maintain masonry above 32 degrees F. for 24 hours minimum using insulated blankets or heated enclosures. Construct windbreaks at wind velocities over 15 mph. Maintain mortar on board at 40 degrees F. minimum, heating mixing water and sand as required.

2. Sprinkle units with high rates of absorption with heated water. Refer to mortar paragraph under PRODUCTS in this Section for provisions governing cold-weather additives to mortar. If standard instead of Type III high-early strength cement must be used, maintain installed masonry above freezing for 48 instead of 24 hours.

3. Do no masonry work at temperatures below 38 degrees F and falling or 35 degrees F and rising, until General Contractor has contacted Architect.

3.3 INSTALLATION

A. Verify that substrate is dry and free from frost, dirt, laitance, loose sand and other material which would prevent satisfactory bond. Lay first course in full mortar bed including face shells and webs of concrete masonry units. Keep cells to be grouted free from mortar.

B. Dampen masonry units as required to prevent excess suction of mortar. Lay concrete masonry units to form continuous unobstructed vertical spaces within wall. Provide full mortar coverage on horizontal and vertical face shells. Also bed webs adjacent to reinforced cores to prevent grout leakage, except omit web bedding at fully grouted walls to permit grout to flow laterally. Cut exposed masonry units, where necessary, with a power saw. Avoid the use (by proper layout) of less-than-half-size units.

C. Install masonry units in the bond pattern indicated, or if none is indicated, in running bond.

D. Step back unfinished work -- toothing is not permitted. Do not adjust installed units -- where necessary, completely remove and reinstall using fresh mortar.

E. Maximum variation of installed walls from plumb, level, or plan grid shall not exceed 1/4 in. in 10 ft. Wall thickness shall not vary more than 1/4 in. plus or minus from dimension shown on drawings.

F. Mortar:

1. Measure materials in calibrated containers, or by similar easily-controlled and maintained method. Do not use shovel measurement.

Reviewed for Code Compliance
Inspections Division
Approved with Conditions
Date: 10/31/17

2. Mix materials in a mechanical mixer at least three minutes with minimum amount of water necessary to produce a workable consistency. Re-temper stiffened mortar as required to restore evaporated water, but do not place mortar any later than 2-1/2 hours after mixing.

3. Exposed-to-view joints shall be approximately 3/8 in. wide, to meet coursing shown, tooled when thumbprint hard with a round bar to produce a dense, slightly concave surface well-bonded to masonry edges.

4. After tooling, cut off mortar tailings with a trowel and brush off excess. Concealed joints, including those on cavity side of masonry veneer, and joints in masonry to be plastered or stuccoed shall be struck off flush, with no protrusions.

5. Mortar not tight at time of tooling shall be raked out, pointed with fresh mortar, and retooled. Where sealant is shown, rake out joint 3/4 in., ready for backer rod and sealant specified in Division 7 sealants Section.

G. Through-wall flashing:

1. Install flashing to the profiles shown on the drawings.

2. Masonry and concrete surfaces receiving through wall flashings shall be thoroughly dry, free from loose material, and reasonably smooth. There shall be no slopes that will form pockets or prevent free drainage of water to exterior surfaces of wall.

3. Set flashing in sealant. Hold sealant back 1/4 inch from face of lintel. Hold flashing 1/2 inch back from face of lintel.

4. At wall openings, extend flashing 6 in. beyond each side of opening and turn up to form pan. Fold all corners, do not cut.

5. Lap joints between lengths of flashing 6 in. minimum and seal with mastic. Seal penetrations through flashing with mastic or overlapping piece of flashing.

H. Provide openings and chases as required for structural members, ductwork, large pipes, etc. Cut exposed masonry with carborundum saw to ensure straight even edges. Neatly block around and patch penetrations. Provide compressible filler around edges of openings to accommodate vibration and structural deflection. Ensure that joint reinforcement remains uncut or is well-lapped.

I. Provide control and expansion joints at locations shown, and keep clean of mortar droppings. Install Joint Sealers in accordance with Section 07900.

J. Build other work into the masonry work as shown, fitting masonry units around other work, and grouting to secure anchorage.

Reviewed for Code Compliance
Inspections Division
Approved with Conditions
Date: 10/31/17

3.4 ALLOWABLE TOLERANCES FOR MASONRY WORK

A. Maximum variation from true surface level for exposed to view walls and partitions:

1. Unit-to-unit tolerance: 1/8 inch.

2. Surface, overall tolerance: ¼ inch in 10 feet in any direction when tested with ten foot long straightedge. Where both faces or wall or partition will be exposed to view, request and obtain decision from the Architect as to which face will be required to conform to the specified surface level tolerance.

B. Maximum variation from true vertical plumb lines:

1. In lines of walls and arises:

a. ¼ inch in 10 feet.
b. 3/8 inch in any story, or up to 20 feet maximum.
c. ½ inch in 40 feet maximum.

2. For external corner lines, control joints, and other conspicuous lines:

a. ¼ inch in any story, or up to 20 feet maximum.

C. Maximum variation from horizontal level or grades for exposed sills, lintel blocks, and other conspicuous lines:

1. ¼ inch in any bay, or up to 20 feet maximum.

2. ½ inch in 40 feet maximum.

D. Maximum variation of linear building line from an established position in plan and related portions of walls and partitions:

1. ½ inch in any bay or up to 20 feet.

2. ¾ inch in 40 feet maximum.

3.5 WALL AND PARTITION CONSTRUCTION

A. General:

1. Build the masonry walls and partitions in the various combinations and thickness as indicated on the Drawings and as herein specified.

2. Build in anchorage items and loose lintels as the work progresses.

Reviewed for Code Compliance
Inspections Division
Approved with Conditions
Date: 10/31/17

3. Lay first course of masonry on a smooth bed or mortar, after supporting concrete has been cleaned. Fill cells of first course concrete masonry units with mortar in all cases. Completely fill cells of concrete masonry units wherever vertical reinforcing rods are installed therein.

4. Fill pressed metal frames occurring in masonry with mortar, as the masonry is erected.

3.6 GROUT

A. Lay masonry units with core cells vertically aligned and cavities clear of mortar and unobstructed.

B. Permit mortar to cure three (3) days before placing grout.

C. ACI Building Code requirements for Masonry Structures and ACI Specifications for Masonry Structures are made part of this specification as are all pertinent sections of the ACI Building Code.

3.6 CLEANING MASONRY

A. Masonry cleaning procedures shall follow recommendations of NCMA-TEK 45 and BIA Technical Note 20 (revised).

B. Dry brush masonry work at end of each day's work.

C. After new mortar has cured 14 days minimum, remove large mortar particles with non-metallic scrapers, chisels, or wooden paddles. Wash off dirt and other foreign materials with clean water and light concentration of soap or detergent.

D. For mortar smears, construction dirt, stains, efflorescence, etc., not removable by above methods, use proprietary cleaners specified under PRODUCTS. Muriatic acid may not be used. Adhere strictly to manufacturer's recommendations.

E. Apply and scrub cleaning solutions with non-metallic fibrous brushes. Thoroughly rinse cleaned area before cleaning solution can dry, using water hosed under moderate pressure.

END OF SECTION

Reviewed for Code Compliance
Inspections Division
Approved with Conditions
Date: 10/31/17

SECTION 04251
Thin Brick Panel System
SPECIFICATIONS FOR THIN TECH® THIN VENEER PANEL

SYSTEM PART 1: GENERAL

1.1 RELATED DOCUMENTS

A. Drawings and general provisions of the Contract, including General and Supplementary Conditions and Division 01 general requirements apply to this section.

1.2 SUMMARY

A. Section Includes: Thin Tech® Thin Veneer Panel System and related materials.

1. Thin Brick.
2. Mortar
3. Cleaning
4. Embedded Flashing
5. Weepholes/Vents
6. Expansion and Control Joints
7. Fasteners

1.3 REFERENCES

A. ASTM A 240 – Standard Specification for Chromium and Chromium Nickel Stainless Steel Plate, Sheet, and Strip for Pressure Vessels and for General Applications.

B. ASTM A 653 – Standard Specification for Steel Sheet, Zinc Coated (Galvanized) or Zinc Iron Alloy Coated (Galvannealed) by the Hot Dip Process.

C. ASTM A 925 – Standard Specification for Zinc 5% Aluminum Mischmetal Alloy Coated Steel Overhead Ground Wire Strand.

D. ASTM B 117 – Standard Practice for Operating Salt Spray (Fog) Apparatus.

E. ASTM C 67 – Standard Test Methods for Sampling and Testing Brick and Structural Clay Tile.

F. ASTM C 126 – Standard Specification for Ceramic Glazed Structural Clay Facing Tile, Facing Brick, and Solid Masonry Units.

G. ASTM C 270 – Standard Specification for Mortar for Unit Masonry.

H. ASTM C 847 – Standard Specification for Metal Lath.

I. ASTM C 1088 – Standard Specification for Thin Veneer Brick Units Made From Clay or Shale.

J. ASTM C 1714 – Standard Specification for Preblended Dry Mortar Mix for Unit Masonry.

K. ASTM D 226 – Standard Specification for Asphalt Saturated Organic Felt Used in Roofing and Waterproofing.

L. ASTM D 1056 – Standard Specification for Flexible Cellular Materials Sponge or Expanded Rubber.

M. TMS 602/ACI 530.1/ASCE 6 – Specifications for Masonry Structures.

1.4 SUBMITTALS

A. Submit under provisions of Section 01 30 00.

Reviewed for Code Compliance
Inspections Division
Approved with Conditions
Date: 10/31/17

B. Product Data: Manufacturer's data sheets on each product to be used, including:

1. Preparation instructions and recommendations.
2. Storage and handling requirements and recommendations.
3. Installation methods.

C. Shop Drawings:

1. Indicate masonry layout, patterns, color arrangement, perimeter conditions, shape requirements, junctions with dissimilar materials, connections, and other related components.
2. Locate and detail expansion and control joints.

D. Samples: Furnish not less than five (5) individual masonry units as samples, showing extreme variations in color and texture.

1.5 QUALITY ASSURANCE

A. Masonry Standard: Comply with TMS 602/ACI 530.1/ASCE 6 unless modified by requirements in the Contract Documents.

B. Comply with all applicable codes, regulations, and standards. Where provision of applicable codes, regulations, and standards conflict with requirements of this section, the more demanding shall govern.

C. Manufacturer Qualifications:

1. Obtain materials from one manufacturer to ensure compatibility.
2. Metal Panel:
   a. A history of corporate experience with metal supported unit masonry panels.
   b. Documented qualifications and capabilities that fully describe the ability to provide the required metal panel system and technical support to the Owner.
   c. At least five (5) completed projects over the last two years, illustrating system performance equal or greater to the criteria listed in this specification.
      i. Include the project location, award date, the completion date, the contract value, and the name and telephone number of a person employed by the Owner who has personal knowledge of the manufacturer's contractual and technical performance.

D. Installer Qualifications:

1. Authorized Glen-Gery Thin Tech® installer or proof of a minimum of five years experience with a related thin masonry support panel system.
2. At least one supervisory journeyman who shall be present at all times during execution of work, who shall be thoroughly familiar with design requirement, type of materials being installed, reference standards and other requirements, and who shall direct all work performed at jobsite.

E. Material Certificates: Prior to delivery, submit to Architect/Engineer certificates indicating compliance with the applicable specifications for Thin Brick Grades, Types or Classes included in these specifications.

F. Sample Panel: Sample or mock-up panels shall be used to review installation process as well as thin brick and mortar color and serves as the standard of workmanship for the Project.

1. Build Mock-up panels for Thin Tech® Wall System in sizes approximately *4'x4'*

Reviewed for Code Compliance
Inspections Division
Approved with Conditions
Date: 10/31/17

a. All thin brick shipped for the sample shall be included in the panel.

b. Use panel as standard of comparison for all masonry work built of same material.

c. Where masonry is to match existing, erect panel adjacent and parallel to existing surface.

d. Clean ½ of exposed faces of panel with masonry cleaner as indicated and approved by manufacturer.

e. Protect accepted panel from the elements with weather-resistant membrane.

f. Approval of panel is for color, texture, and blending of masonry units; relationship of mortar to masonry unit colors; tooling of joints; and aesthetic qualities of workmanship.

g. Do not start work until Owner has accepted sample panel.

h. Do not destroy or move panel until work is completed and accepted by Owner.

1.6 DELIVERY, STORAGE AND HANDLING

A. Deliver materials in manufacturer's unopened containers, identified with name, brand, type, and grade.

B. Store products in manufacturer's unopened packaging until ready for installation.

C. Store Glen-Gery Thin Tech® Panels and accessories off the ground to prevent contamination by mud, dust or other materials likely to cause staining or other defects.

D. Protect materials from contamination, dampness, freezing, or overheating in accordance with manufacturer's instructions.

E. Store different types of materials separately.

F. Mastic and mortar additive are to be stored above 32° Fahrenheit and below 86° Fahrenheit temperatures.

G. Store and dispose of solvent-based materials, and materials used with solvent-based materials, in accordance with requirements of local authorities having jurisdiction.

1.7 PROJECT CONDITIONS

A. Comply with requirements of referenced standards and recommendations of material manufacturers for environmental conditions before, during, and after installation.

B. Protection of Work:

1. Maintain environmental conditions (temperature, humidity, and ventilation) within limits recommended by manufacturer for optimum results. Do not install products under environmental conditions outside manufacturer's absolute limits.

2. Stain Prevention:

a. Prevent adhesive, and mortar from staining the face of masonry.

b. Remove immediately grout or mortar in contact with face of such masonry.

c. To avoid smearing of adhesive on the face of masonry. Allow adhesive on face of installed masonry to set before trying to remove.

d. Protect all sills, ledges and projections from droppings of adhesive or mortar.

e. Protect the wall from rain-splashed mud and mortar splatter.

f. Turn scaffold boards closest to the wall on edge when work is not in progress to prevent rain from splashing

Reviewed for Code Compliance
Inspections Division
Approved with Conditions
Date: 10/31/17

mortar and dirt onto masonry.

C. Cold Weather Requirements:

1. Do not use frozen materials or materials mixed or coated with ice or frost.

2. Do not build on frozen substrates.

3. Remove and replace unit masonry damaged by frost or by freezing conditions.

4. Comply with cold-weather construction requirements contained in TMS 602/ACI 530.1/ASCE 6.

5. Comply with adhesive manufacturers application and temperature requirements.

D. Hot Weather Requirements:

1. Comply with hot-weather construction requirements contained in TMS 602/ACI 530.1/ASCE 6.

2. Protect mortar from uneven and excessive evaporation.

a. The face of the installed thin brick may be dampened with water prior mortar installation to reduce the absorption of moisture from the mortar joint and increase bond.

b. Veneer may be fogged with water to allow the mortar enough time to set. Apply only enough moisture to consistently dampen the wall without allowing water to run down the face.

3. Comply with adhesive manufacturer's application and temperature requirements.

PART 2: PRODUCTS

2.1.1 METAL MASONRY SUPPORT PANEL, GENERAL

A. Metal Masonry Support Panel intended for the interior or exterior structural mechanical support of thin veneer on concrete, masonry, metal or frame construction. 26-gauge architectural grade (structural grade 33) steel with G90 galvanized thermal set coating and stucco embossed texture with angled support ties.

2.1.2 MANUFACTURERS

A. Acceptable Manufacturer: Glen-Gery Corporation located at 1166 Spring Street • P.O. Box 7001, Wyomissing, PA 19610 Tel: 610-562-3076 • Email: info@glengery.com • Web: www.glengery.com

B. Substitutions: Not permitted.

2.1.3 METAL MASONRY SUPPORT PANELS

A. All Metal Panels for Thin Brick Support specified and shown on drawings shall be Elite Thin Tech Panel as manufactured by the Glen-Gery Corporation.

1. Flat Panels: 16-square foot (1.44 m^2) masonry support panels for flat wall areas 48" (1,219.2 mm) x 48" (1,219.2 mm) nominal (see below), shall have support spacing as follows (actual dimensions listed):
Available Support Tie Sizes: 19/64"
.
a. 4" (101.6 mm) for Econo, Utility and other 3-5/8" (92.1 mm) high units.
Classic panel size: 47-13/16" (1,214.45 mm) x 48" (1,219.2 mm)• Elite panel size: 48" (1,219.2 mm) x 48" (1,219.2 mm)

B. Pre-Bent Corner Panels: 16 sq. ft. (1.44 m^2) masonry support panels for external corner applications 48" high (nominal) with 16" (406 mm) leg and 32" (813 mm) leg.

1. Support spacing to match flat panels specified above.

2.2.1 MASONRY UNITS, GENERAL

A. Defective Units: Referenced masonry unit standards may allow a certain percentage of units to contain chips, cracks, or other defects exceeding limits stated in the standard. Do not use units where such defects will be exposed in the

Reviewed for Code Compliance
Inspections Division
Approved with Conditions
Date: 10/31/17

completed work.

2.2.2 MANUFACTURERS

A. Acceptable Manufacturer: Glen-Gery Corporation located at 1166 Spring Street • P.O. Box 7001, Wyomissing, PA 19610 Tel: 610-562-3076 • e-mail: info@glengery.com • Web: www.glengery.com

B. Substitutions: Not permitted.

2.2.3 CLAY MASONRY UNITS

A. General: Provide shapes indicated and as follows:

1. Provide special shapes for applications where flats (stretcher units) cannot accommodate special conditions, including those at corners, movement joints, bond beams, sashes, shelf angles and lintels. Mitered units shall not be used at standard corners.

2. Provide special shapes for applications requiring thin brick of size, form, color, and texture on exposed surfaces that cannot be produced by sawing.

3. Provide special shapes for applications where shapes produced by sawing would result in sawed surfaces being exposed to view.

B. All thin brick specified and shown on drawings shall be Old Detroit as manufactured by the Glen-Gery Corporation.

1. Thin Brick: ASTM C 1088, Grade Exterior.

   a. Type TBS
   b. Size (height, length – actual dimensions listed)
   c. 1) Econo Size: 3-5/8" (92.1 mm) high, 7-5/8" (193.7 mm) long Thickness: ½"

2.3 MORTAR

A. Mortar for thin brick.

1. Mortar shall conform to ASTM C 270 Standard Specification for Mortar for Unit Masonry under the guidelines provided in BIA Technical Notes #8 Series.
   a. Type N

B. Cold Weather Additives (including accelerators) shall not be used in thin brick mortar mix.

2.4 EMBEDDED FLASHING MATERIALS

A. Metal Flashing:

1. Glen-Gery Thin Tech® Starter Angle: Minimum pre-bent in 10' (304.8 cm) lengths.

B. Flexible Flashing:

1. Rubberized-Asphalt Flashing: Composite flashing product consisting of a pliable, adhesive rubberized-asphalt compound, bonded to a high-density, cross-laminated polyethylene film to produce an overall thickness of not less than 0.04"

2. Elastomeric Thermoplastic Flashing: Composite flashing product consisting of a polyester-reinforced ethylene interpolymer alloy as follows:

   a. Monolithic Sheet: Elastomeric thermoplastic flashing, 0.040" (1.0 mm) thick.

   b. Self-Adhesive Sheet: Elastomeric thermoplastic flashing, 0.025" (0.6 mm) thick, with a 0.015" (0.4 mm) thick coating of rubberized-asphalt adhesive.

3. Adhesives, Primers, and Seam Tapes for Flashings: Flashing manufacturer's standard products or products recommended by flashing manufacturer for bonding flashing sheets to each other and to substrates.

Reviewed for Code Compliance
Inspections Division
Approved with Conditions
Date: 10/31/17

2.5 WEEPHOLES/VENTS

A. Glen-Gery Thin Tech® air vent: Impact resistant polypropylene copolymer, Density 2,000 grams/sq. meter. Size: 3/8" (10 mm) x 1/2" (13 mm) x 4' (122 cm).

2.6 CONTROL AND EXPANSION JOINTS

A. Backer Rod: Non-gassing polyethylene or flexible polyurethane foam rod 25% wider than width of joint to be filled and depth exceeds requirements in as indicated in Division 07 Section "Joint Sealants".

2.7 FASTENERS (For Support Tie Ledge Panel)

A. Screw fasteners shall be a minimum #8 s/s with a minimum protection of 800 hrs. when tested according to ASTM B 117.

B. Fasteners Length:

1. Wood frame: Fasteners shall penetrate the studs a minimum of 1" (25 mm).

2.8 ADHESIVE

A. Adhesive for thin brick

1. High-strength mastics must exceed ASTM D3498 and ASTM C557 specifications with less than 70 grams of VOC per liter with a shear value between the thin veneer and the panel greater than 100 PSI (10.5 kg/cm2).

2.9 SHEATHING

A. Sheathing shall be:

1. Closed-cell insulating rigid foam not less than 1/2" (12.7 mm) thick conforming to ASTM C 578 or ASTM C 1289.

2.10 WEATHER BARRIER

A. Provide weather barriers as designated in Division 07.

2.11 MASONRY CLEANERS

A. Proprietary Acidic Cleaner: Manufacturer's standard-strength cleaner designed for removing mortar/grout stains, efflorescence, and other new construction stains from new masonry without discoloring or damaging masonry surfaces. Use product expressly approved for intended use by cleaner manufacturer and manufacturer of masonry units being cleaned.

1. Diedrich Technologies, Inc.

a. 202 New Masonry Detergent

b. 202V Vana-Stop®

PART 3: EXECUTION

3.1 EXAMINATION

A. Do not begin installation until substrates and foundations as well as rough-in and built-in construction have been properly prepared.

1. Walls must be structurally sound and the substrate system designed with a wall deflection not greater than L/360.

Reviewed for Code Compliance
Inspections Division
Approved with Conditions
Date: 10/31/17

a. Maximum wall frame spacing for stud walls = 16" (406.4 mm) O.C.

b. Maximum wall frame spacing for girts = 30" (762 mm) O.C.

c. Minimum 0.043" (18-gauge; 1.09 mm) studs for exterior walls.

2. Substrate shall have no planer irregularities greater than 1/4" in 10' (7 mm in 3.05 m).

B. Verify substrate including, concrete, masonry or framing as well as sheathings and weather barrier are properly installed.

C. Verify walls are plumb and corners are braced to specifications.

D. Substrate must be flat, within 1/8" (3.2 mm) within any 4' (1.2 m) square area with no planar irregularities greater than 1/4" per 10 lin. ft.

E. If substrate, foundations or flashings are the responsibility of another installer, notify Architect and General contractor of unsatisfactory preparation before proceeding.

3.2 PREPARATION

A. Clean surfaces thoroughly prior to installation. All surfaces must be free of water, snow, dirt, mud, oil and other foreign materials prior to application.

B. Prepare surfaces using the methods recommended by the manufacturer for achieving the best result for the substrate under the project conditions.

C. Trim or flash in place per manufacturer's details and/or BIA Technical Note 7A on flashing of Brick Walls.

3.3 INSTALLATION, GENERAL

A. Install materials in accordance with manufacturer's instructions.

B. Select and arrange exposed masonry units to produce a uniform blend of color and texture.

1. Mix units from several pallets or cubes as they are placed.

C. Comply with tolerances in TMS 602/ACI 530.1/ASCE 6.

3.4 SUPPORT TIE LEDGE PANEL

A. Install in accordance with manufacturer's written instructions as applicable to each type of substrate required.

B. Trim, starter angle and flashing shall be installed prior to panel installation.

C. Walls shall be constructed of structurally sound masonry, wood, or steel studs, with an approved building sheathing and weather resistant barriers as required.

D. Panels shall be clean, free of dirt, oil or any other foreign contaminant.

E. Lay out panels in advance for accurate spacing of tabs to allow installation of full height masonry units at top and bottom of walls, openings, etc. when possible. Note: Panel sizes will vary depending on spacing.

F. Attach panels flat to the substrate in true and level rows with support ties aligned and level to each other at flat sections as well as corners.

G. Stagger metal panel joints over sheathing joints. This requires cutting 1/2 panels when starting at outside or inside corners. When using pre-bent corner panels, stagger joints of flat panels after corner panel installation.

H. Do not allow panels to bridge movement joints in substrate.

I. Install full-size uncut panels when possible. When cutting is required to provide staggered panel joints or to fit specific application, cut panels to provide clean, unbent edges.

Reviewed for Code Compliance
Inspections Division
Approved with Conditions
Date: 10/31/17

J. Install panels to ensure a 1/16" to 1/8" gap between the sides of the panels and butt panels vertically, alway gap at movement joints locations equal to the thickness of the joint.

K. Stop panel 1/4" to 3/8" from inside corners, openings and other materials to allow for movement.

L. Fastener Installation: Mechanically attach metal panels with a minimum of one fastener per sq. ft. (900 cm^2) increasing spacing along the top and bottom of the wall and around openings.

1. Horizontal fastener spacing shall not exceed 24"; vertical fastener spacing shall not exceed 16".

2. Provide additional anchors around the perimeter of walls as well as openings larger than 24" (406 mm) in either dimension, as well as building corners not utilizing corner panels as follows:

a. Install fasteners a minimum of 3 per sq. ft. (900 cm^2).

i. At the top and bottom of the walls, fasteners shall be spaced a maximum of 12" (305 mm) horizontally and within the height of a single row or course of masonry.

ii. At vertical wall ends of wall and openings, fasteners shall be spaced a maximum of 8" vertically within 4" of the end of the panel.

3.5 THIN VENEERS

A. Lay out walls in advance for accurate spacing of surface bond patterns with uniform joint thicknesses and for accurate location of openings, movement joints, returns, and offsets.

1. Avoid using less-than-half-size units, particularly at corners and jambs.

2. Ensure unfinished or cut faces are not exposed to view upon completion.

B. Select and arrange units for exposed unit masonry to produce a uniform blend of color and texture.

C. Lay masonry in bond pattern as indicated on drawings or general notes.

D. Back face of thin brick must be dry and clean; free of dirt, oil or any other foreign contaminant.

E. Leave a uniform 3/8" to 1/2" (9.5 to 12.7 mm) gap at openings to allow for movement joint installation.

F. Adhere individual units to panel using specified adhesive placed on the back of the units in two 1/2" to 3/4" dabs or vertical strips 3/8" wide. For corner brick apply one dap on head and one dab at each end of the long leg.

1. Do not apply adhesive in a manner that would create horizontal strips of adhesive that may prevent moisture from draining down the wall.

2. Do not use excessive adhesive as this will cause thin brick to tilt away from wall prior to adhesive set.

G. Thin veneers shall be applied within 5 to 10 minutes after adhesive has been applied and before film begins to form on the adhesive.

H. Space thin brick to ensure that the head joints do not exceed 5/8" (16 mm) or fall below 1/4" (6.4 mm).

I. When adjustment is necessary to be made after adhesive begins to harden, remove hardened adhesive and replace with fresh adhesive.

J. Keep areas intended to receive sealant clean of thin brick, adhesive and other materials during construction.

K. Do not allow masonry units to bridge movement joints in substrate.

3.6 MORTAR INSTALLATION AND JOINTING

Reviewed for Code Compliance
Inspections Division
Approved with Conditions
Date: 10/31/17

A. After adhesive has set a minimum of 12 hours, completely fill head and bed joints between adhered veneer receive mortar.

B. Keep weep holes free of mortar every 24" immediately above starter angles and flashings.

C. Tool exposed joints when thumbprint hard to joint profile listed below:

1. Joint Profile: Tool mortar joints to a concave appearance.

3.7 FLASHING

A. Install embedded flashing and weep holes in Glen-Gery Thin Tech® wall panel assemblies at the base of the wall, above openings, above horizontal movement joints and other obstructions to downward flow of water in wall, and where indicated.

B. Before covering with wall panel or mortar, seal penetrations in flashing with adhesive, sealant, or tape as recommended by flashing manufacturer.

C. Carry flashing vertically as detailed, but not less than 3" (76 mm) above horizontal plane.

D. Lap flashing a minimum of 3" (76 mm).

E. Seal all flashing laps with compatible lap cement.

F. Extend head and sill flashings not less than 6" (150 mm) beyond edges of openings; seal with mastic.

G. Project starter angle from face of wall approximately 1/4" (6 mm) to form a drip.

3.8 WEEPHOLES/VENTS

A. Vents for Elite Panel: Install specified air vent where the panel meets the starter angle or flashing; unless otherwise indicated.

B. Weepholes (in areas where vents are not installed or specified): Install weepholes to drain moisture from the wall by omitting mortar/sealant a maximum of 24" (610 mm) on center horizontally for units 12" (305 mm) or less in length and a maximum of 32" (813 mm) on center for larger units, in the joint between the flashing and thin brick above or in the lower third of the head joints immediately above the starter angles and flashings, including the base of the wall, at horizontal expansion joints and above all openings.

C. Keep vents and weepholes free of mortar.

3.9 CONTROL AND EXPANSION JOINTS

A. Keep clean of all mortar, adhesive and debris.

B. Locate joints where indicated on drawings.

C. Provide vertical and horizontal pressure-relieving joints where indicated by installing sealant, and inserting a compressible filler when required, as specified in Division 07 Section “Joint Sealants,” but not less than 3/8" (10 mm). Backer rod may not be required and is dependent upon depth of joint.

D. Install joints between Thin Tech® wall assemblies and other materials including around windows and doors.

E. Install joints at changes in substrate and where movement joints occur in substrate.

F. Vertical joints must not exceed 16' (488 cm) on center in walls without openings; including joint within 4' (122 cm) of the corner.

3.10 CLEANING

A. In-Progress Cleaning: Clean unit masonry as work progresses by dry brushing to remove adhesive as well as mortar

Reviewed for Code Compliance
Inspections Division
Approved with Conditions
Date: 10/31/17

fins and smears before tooling joints.

B. Final Cleaning: After mortar is thoroughly set and cured, clean exposed masonry as follows:

1. Cut out all defective mortar joints and holes in exposed masonry and provide new mortar.

2. Clean preselected sample wall area with specified cleaning solution as per manufacturer's recommendations. Do not proceed with cleaning until approved by Architect.

3. Clean thin brick in accordance with manufacturer's written instructions.

4. Protect adjacent nonmasonry surfaces from contact with cleaner.

5. All cleaning practices and product used shall be in accordance with cleaning products manufacturer's written instructions.

Reviewed for Code Compliance
Inspections Division
Approved with Conditions
Date: 10/31/17

SECTION 05120

STRUCTURAL STEEL

PART 1 - GENERAL

1.1 RELATED DOCUMENTS

A. Drawings and general provisions of the Contract, including General and Supplementary Conditions and Division 1 Specification Sections, apply to this Section.

1.2 SUMMARY

A. This Section includes structural steel.

B. Related Sections: The following Sections contain requirements that relate to this Section:

1. Division 1 Section "Quality Control" for independent testing agency procedures and administrative requirements.
2. Division 5 Section "Metal Fabrications" for miscellaneous steel framing.
3. Division 9 Section "Painting" for surface preparation and priming requirements.

1.3 PERFORMANCE REQUIREMENTS

A. Engineering Responsibility: Engage a fabricator who utilizes a qualified professional engineer to prepare calculations, Shop Drawings, and other structural data for structural steel connections.

1.4 SUBMITTALS

A. General: Submit each item in this Article according to the Conditions of the Contract and Division 1 Specification Sections.

B. Product Data for each type of product specified.

C. Shop Drawings detailing fabrication of structural steel components.

1. Include details of cuts, connections, splices, camber, holes, and other pertinent data.
2. Indicate welds by standard AWS symbols, distinguishing between shop and field welds, and show size, length, and type of each weld.
3. Indicate type, size and length of bolts, distinguishing between shop and field bolts. Identify high-strength bolted slip-critical, direct-tension, or tensioned shear/bearing connections.

Reviewed for Code Compliance
Inspections Division
Approved with Conditions
Date: 10/31/17

D. Qualification data for firms and persons specified in the "Quality Assurance" Article to demonstrate their capabilities and experience. Include lists of completed projects with project names and addresses, names and addresses of architects and owners, and other information specified.

E. Recycled: Provide manufacturer's product data on post-consumer recycled content and post-industrial recycled content as a percentage of the full product composite.

F. Provide costs for all materials separate from labor costs.

G. Mill test reports signed by manufacturers certifying that their products, including the following, comply with requirements.

1. Structural steel, including chemical and physical properties.
2. Bolts, nuts, and washers, including mechanical properties and chemical analysis.
3. Direct-tension indicators.
4. Shear stud connectors.

1.5 QUALITY ASSURANCE

A. Installer Qualifications: Engage an experienced Installer who has completed structural steel work similar in material, design, and extent to that indicated for this Project and with a record of successful in-service performance.

B. Fabricator Qualifications: Engage a firm experienced in fabricating structural steel similar to that indicated for this Project and with a record of successful in-service performance, as well as sufficient production capacity to fabricate structural steel without delaying the Work.

1. Fabricator must participate in the AISC Quality Certification Program and be designated an AISC-Certified Plant as follows:

a. Category: Category I, conventional steel structures.

C. Comply with applicable provisions of the following specifications and documents:

1. AISC's "Specification for Structural Steel Buildings--Allowable Stress Design and Plastic Design."
2. AISC's "Load and Resistance Factor Design (LFRD) Specification for Structural Steel Buildings."
3. AISC's "Specification for Allowable Stress Design of Single-Angle Members."
4. AISC's "Specification for Load and Resistance Factor Design of Single-Angle Members."
5. AISC's "Seismic Provisions for Structural Steel Buildings."
6. ASTM A 6 (ASTM A 6M) "Specification for General Requirements for Rolled Steel Plates, Shapes, Sheet Piling, and Bars for Structural Use."
7. Research Council on Structural Connections' (RCSC) "Specification for Structural Joints Using ASTM A 325 or A 490 Bolts."
8. Research Council on Structural Connections' (RCSC) "Load and Resistance Factor Design Specification for Structural Joints Using ASTM A 325 or A 490 Bolts."

Reviewed for Code Compliance
Inspections Division
Approved with Conditions
Date: 10/31/17

D. Professional Engineer Qualifications: A professional engineer who is legally authorized to practice in the jurisdiction where Project is located and who is experienced in providing engineering services of the kind indicated. Engineering services are defined as those performed for projects with structural steel framing that are similar to that indicated for this Project in material, design, and extent.

E. Welding Standards: Comply with applicable provisions of AWS D1.1 "Structural Welding Code--Steel."

1. Present evidence that each welder has satisfactorily passed AWS qualification tests for welding processes involved and, if pertinent, has undergone recertification.

1.6 DELIVERY, STORAGE, AND HANDLING

A. Deliver structural steel to Project site in such quantities and at such times to ensure continuity of installation.

B. Store materials to permit easy access for inspection and identification. Keep steel members off ground by using pallets, platforms, or other supports. Protect steel members and packaged materials from erosion and deterioration.

1. Store fasteners in a protected place. Clean and re-lubricate bolts and nuts that become dry or rusty before use.
2. Do not store materials on structure in a manner that might cause distortion or damage to members or supporting structures. Repair or replace damaged materials or structures as directed.

1.7 SEQUENCING

A. Supply anchorage items to be embedded in or attached to other construction without delaying the Work. Provide setting diagrams, templates, instructions, and directions, as required, for installation.

PART 2 - PRODUCTS

2.1 MATERIALS

A. Structural Steel Shapes, Plates, and Bars: As follows:

1. Rolled W Shapes & Channels: ASTM A572 Grade 50.
2. Plates, Bars and Angles: ASTM A36

B. Cold-Formed Structural Steel Tubing: ASTM A 500, Grade B.

C. Hot-Formed Structural Steel Tubing: ASTM A 501.

D. Steel Pipe: ASTM A 500, Grade C.

Reviewed for Code Compliance
Inspections Division
Approved with Conditions
Date: 10/31/17

E. Anchor Rods (Bolts), Bolts, Nuts, and Washers: As follows:

1. Anchor Rods (Bolts): ASTM A 307, ASTM A 449 refer to plans.
2. Washers: ASTM A 36 (ASTM A 36M).

F. Nonhigh-Strength Bolts, Nuts, and Washers: ASTM A 307, Grade A (ASTM F 568, Property Class 4.6); carbon-steel, hex-head bolts; carbon-steel nuts; and flat, unhardened steel washers.

G. High-Strength Bolts, Nuts, and Washers: ASTM A 325 (ASTM A 325M), Type 1, heavy hex steel structural bolts, heavy hex carbon-steel nuts, and hardened carbon-steel washers.

H. High-Strength Bolts, Nuts, and Washers: ASTM A 490 (ASTM A 490M), Type 1, heavy hex steel structural bolts, heavy hex carbon-steel nuts, and hardened carbon-steel washers, uncoated.

I. Welding Electrodes: Comply with AWS requirements.

2.2 PRIMER

A. Primer: Fabricator's standard lead- and chromate-free, nonasphaltic, rust-inhibiting primer.

B. For exposed steel at porte cochere and channel lintels use TNEMEC 90-97 Primer and SP6 Commercial Blast Cleaner.

2.3 GROUT

A. Nonmetallic, Shrinkage-Resistant Grout: Premixed, nonmetallic, noncorrosive, nonstaining grout containing selected silica sands, portland cement, shrinkage compensating agents, plasticizing and water-reducing agents, complying with ASTM C 1107, of consistency suitable for application, and a 30-minute working time.

2.4 FABRICATION

A. Fabricate and assemble structural steel in shop to greatest extent possible. Fabricate structural steel according to AISC specifications referenced in this Section and in Shop Drawings.

1. Camber structural steel members where indicated.
2. Identify high-strength structural steel according to ASTM A 6 (ASTM A 6M) and maintain markings until steel has been erected.
3. Mark and match-mark materials for field assembly.
4. Fabricate for delivery a sequence that will expedite erection and minimize field handling of structural steel.
5. Complete structural steel assemblies, including welding of units, before starting shop-priming operations.
6. Comply with fabrication tolerance limits of AISC's "Code of Standard Practice for Steel Buildings and Bridges" for structural steel.

Reviewed for Code Compliance
Inspections Division
Approved with Conditions
Date: 10/31/17

B. Thermal Cutting: Perform thermal cutting by machine to greatest extent possible.

1. Plane thermally cut edges to be welded.

C. Finishing: Accurately mill ends of columns and other members transmitting loads in bearing.

D. Steel Wall Framing: Select true and straight members for fabricating steel wall framing to be attached to structural steel framing. Straighten as required to provide uniform, square, and true members in completed wall framing.

E. Holes: Provide holes required for securing other work to structural steel framing and for passage of other work through steel framing members, as shown on Shop Drawings.

1. Cut, drill, or punch holes perpendicular to metal surfaces. Do not flame-cut holes or enlarge holes by burning. Drill holes in bearing plates.
2. Weld threaded nuts to framing and other specialty items as indicated to receive other work.

2.5 SHOP CONNECTIONS

A. Shop install and tighten nonhigh-strength bolts, except where high-strength bolts are indicated.

B. Shop install and tighten high-strength bolts according to RCSC's "Specification for Structural Joints Using ASTM A 325 or A 490 Bolts."

C. Weld Connections: Comply with AWS D1.1 for procedures, appearance and quality of welds, and methods used in correcting welding work.

1. Assemble and weld built-up sections by methods that will maintain true alignment of axes without warp.
2. Verify that weld sizes, fabrication sequence, and equipment used for architecturally exposed structural steel will limit distortions to allowable tolerances. Prevent surface bleeding of back-side welding on exposed steel surfaces. Grind smooth exposed fillet welds 1/2 inch (13 mm) and larger. Grind flush butt welds. Dress exposed welds.

2.6 SHOP PRIMING

A. Shop prime steel surfaces, except the following:

1. Surfaces embedded in concrete or mortar. Extend priming of partially embedded members to a depth of 2 inches (50 mm).
2. Surfaces to be field welded.
3. Surfaces to be high-strength bolted with slip-critical connections.
4. Surfaces to receive sprayed-on fireproofing.
5. Galvanized surfaces.

Reviewed for Code Compliance
Inspections Division
Approved with Conditions
Date: 10/31/17

B. Surface Preparation: Clean surfaces to be painted. Remove loose rust, loose mill scale, a spatter, slag, or flux deposits. Prepare surfaces according to SSPC specifications as follows:

1. SSPC-SP 2 "Hand Tool Cleaning."
2. SSPC-SP 3 "Power Tool Cleaning."

C. Priming: Immediately after surface preparation, apply primer according to manufacturer's instructions and at rate recommended by SSPC to provide a dry film thickness of not less than 1.5 mils (0.038 mm). Use priming methods that result in full coverage of joints, corners, edges, and exposed surfaces.

2.7 GALVANIZING

A. Hot-Dip Galvanized Finish: Apply zinc coating by the hot-dip process to structural steel indicated for galvanizing according to ASTM A 123.

2.8 SOURCE QUALITY CONTROL

A. Owner will engage an independent testing and inspecting agency to perform shop inspections and tests and to prepare test reports.

1. Testing agency will conduct and interpret tests and state in each report whether test specimens comply with or deviate from requirements.
2. Provide testing agency with access to places where structural steel Work is being fabricated or produced so required inspection and testing can be accomplished.

B. Correct deficiencies in or remove and replace structural steel that inspections and test reports indicate do not comply with specified requirements.

C. Additional testing, at Contractor's expense, will be performed to determine compliance of corrected Work with specified requirements.

D. Shop-bolted connections will be tested and inspected according to RCSC's "Specification for Structural Joints Using ASTM A 325 or A 490 Bolts."

E. In addition to visual inspection, shop-welded connections will be inspected and tested according to AWS D1.1 and the inspection procedures listed below, at testing agency's option.

1. Liquid Penetrant Inspection: ASTM E 165.
2. Magnetic Particle Inspection: ASTM E 709; performed on root pass and on finished weld. Cracks or zones of incomplete fusion or penetration will not be accepted.
3. Radiographic Inspection: ASTM E 94 and ASTM E 142; minimum quality level "2-2T."
4. Ultrasonic Inspection: ASTM E 164.

Reviewed for Code Compliance
Inspections Division
Approved with Conditions
Date: 10/31/17

PART 3 - EXECUTION

3.1 EXAMINATION

A. Before erection proceeds, and with the steel erector present, verify elevations of concrete and masonry bearing surfaces and locations of anchorages for compliance with requirements.

B. Do not proceed with erection until unsatisfactory conditions have been corrected.

3.2 PREPARATION

A. Provide temporary shores, guys, braces, and other supports during erection to keep structural steel secure, plumb, and in alignment against temporary construction loads and loads equal in intensity to design loads. Remove temporary supports when permanent structural steel, connections, and bracing are in place, unless otherwise indicated.

3.3 ERECTION

A. Set structural steel accurately in locations and to elevations indicated and according to AISC specifications referenced in this Section.

B. Base and Bearing Plates: Clean concrete and masonry bearing surfaces of bond-reducing materials and roughen surfaces prior to setting base and bearing plates. Clean bottom surface of base and bearing plates.

1. Set base and bearing plates for structural members on wedges, shims, or setting nuts as required.
2. Tighten anchor bolts after supported members have been positioned and plumbed. Do not remove wedges or shims but, if protruding, cut off flush with edge of base or bearing plate prior to packing with grout.
3. Pack grout solidly between bearing surfaces and plates so no voids remain. Finish exposed surfaces, protect installed materials, and allow to cure.

a. Comply with manufacturer's instructions for proprietary grout materials.

C. Maintain erection tolerances of structural steel within AISC's "Code of Standard Practice for Steel Buildings and Bridges."

1. Maintain erection tolerances of architecturally exposed structural steel within AISC's "Code of Standard Practice for Steel Buildings and Bridges."

D. Align and adjust various members forming part of complete frame or structure before permanently fastening. Before assembly, clean bearing surfaces and other surfaces that will be in permanent contact. Perform necessary adjustments to compensate for discrepancies in elevations and alignment.

1. Level and plumb individual members of structure.

Reviewed for Code Compliance
Inspections Division
Approved with Conditions
Date: 10/31/17

2. Establish required leveling and plumbing measurements on mean operating temperature of structure. Make allowances for difference between temperature at time of erection and mean temperature at which structure will be when completed and in service.

E. Splice members only where indicated.

F. Remove erection bolts on welded, architecturally exposed structural steel; fill holes with plug welds; and grind smooth at exposed surfaces.

G. Do not use thermal cutting during erection.

H. Finish sections thermally cut during erection equal to a sheared appearance.

I. Do not enlarge unfair holes in members by burning or by using drift pins. Ream holes that must be enlarged to admit bolts.

3.4 FIELD CONNECTIONS

A. Install and tighten nonhigh-strength bolts, except where high-strength bolts are indicated.

B. Install and tighten high-strength bolts according to RCSC's "Specification for Structural Joints Using ASTM A 325 or A 490 Bolts."

C. Weld Connections: Comply with AWS D1.1 for procedures, appearance and quality of welds, and methods used in correcting welding work.

1. Comply with AISC specifications referenced in this Section for bearing, adequacy of temporary connections, alignment, and removal of paint on surfaces adjacent to field welds.
2. Assemble and weld built-up sections by methods that will maintain true alignment of axes without warp.
3. Verify that weld sizes, fabrication sequence, and equipment used for architecturally exposed structural steel will limit distortions to allowable tolerances. Prevent surface bleeding of back-side welding on exposed steel surfaces. Grind smooth exposed fillet welds 1/2 inch (13 mm) and larger. Grind flush butt welds. Dress exposed welds.

3.5 FIELD QUALITY CONTROL

A. Owner will engage an independent testing and inspecting agency to perform field inspections and tests and to prepare test reports.

1. Testing agency will conduct and interpret tests and state in each report whether tested Work complies with or deviates from requirements.

B. Correct deficiencies in or remove and replace structural steel that inspections and test reports indicate do not comply with specified requirements.

Reviewed for Code Compliance
Inspections Division
Approved with Conditions
Date: 10/31/17

C. Additional testing, at Contractor's expense, will be performed to determine compliance of c rected Work with specified requirements.

D. Field-bolted connections will be tested and inspected according to RCSC's "Specification for Structural Joints Using ASTM A 325 or A 490 Bolts."

E. In addition to visual inspection, field-welded connections will be inspected and tested according to AWS D1.1 and the inspection procedures listed below, at testing agency's option.

1. Liquid Penetrant Inspection: ASTM E 165.
2. Magnetic Particle Inspection: ASTM E 709; performed on root pass and on finished weld. Cracks or zones of incomplete fusion or penetration will not be accepted.
3. Radiographic Inspection: ASTM E 94 and ASTM E 142; minimum quality level "2-2T."
4. Ultrasonic Inspection: ASTM E 164.

3.6 CLEANING

A. Touchup Painting: Cleaning and touchup painting of field welds, bolted connections, and abraded areas of shop paint on structural steel are included in Division 9 Section "Painting."

END OF SECTION 05120

Reviewed for Code Compliance
Inspections Division
Approved with Conditions
Date: 10/31/17

SECTION 05500

METAL FABRICATIONS

PART 1 GENERAL

1.01 SUMMARY

A. Section Includes:

1. Rough Hardware
2. Loose Bearing and Leveling Plates
3. Loose Steel Lintels
4. Ladders:
   a. Elevator Pit Ladder
5. Support Angles for Elevator Door Sills
6. Elevator Sump Pit Cover
7. Handrails
8. Laundry Trench Grate
9. Miscellaneous Metal Trim
10. Steel Framing and Supports for Applications where framing and supports are not specified in other Sections

A. Related Sections:

1. Section 09900 - Paints and Coatings
2. Section 09960 - High Performance Coatings
3. Section 14240 - Hydraulic Elevators

1.02 SUBMITTALS

A. General: Submit the following in accordance with Conditions of Contract and Division 1 Specification Sections.

B. Submit Shop Drawings detailing fabrication and erection of each metal fabrication indicated. Include plans, elevations, sections, and details of metal fabrications and their connections. Show anchorage and accessory items. Provide templates for anchors and bolts specified for installation under other sections.

C. Submit samples representative of materials and finished products as may be requested by Owner's Representative.

Reviewed for Code Compliance
Inspections Division
Approved with Conditions
Date: 10/31/17

1.03 QUALITY ASSURANCE

A. Fabricator Qualifications: Firm experienced in successfully producing metal fabrications similar to that indicated for this Project, with sufficient production capacity to produce required units without causing delay in the Work.

B. Installer Qualifications: Arrange for installation of metal fabrications specified in this Section by same firm that fabricated them.

C. Quality welding processes and welding operators in accordance with the following:

1. AWS D1.1 "Structural Welding Code - Steel"

2. D1.3 "Structural Welding Code - Sheet Steel"

3. D1.2 "Structural Welding Code - Aluminum"

D. Certify that each welder has satisfactorily passed AWS qualification tests for welding processes involved and, if pertinent, has undergone recertification.

1.04 PROJECT/SITE CONDITIONS

A. Field Measurements: Check actual locations of walls and other construction to which metal fabrications must fit, by accurate field measurements before fabrication; show recorded measurements on final shop drawings. Coordinate fabrication schedule with construction progress to avoid delay of Work.

1.05 COORDINATION

A. Coordinate installation of anchorages for metal fabrications. Furnish setting drawings, templates, and directions for installing anchorages, including sleeves, concrete inserts, anchor bolts, and items with integral anchors, that are to be embedded in concrete or masonry. Deliver such items to Project site in time for installation.

PART 2 PRODUCTS

2.01 FERROUS METALS

A. Metal Surfaces, General: For metal fabrications exposed to view upon completion of the Work, provide materials selected for their surface flatness, smoothness, and freedom from surface blemishes. Do not use materials whose exposed surfaces exhibit pitting, seam marks, roller marks, rolled trade names, roughness, and, for steel sheet, variations in flatness exceeding those permitted by reference standards for stretcher-leveled sheet.

B. Steel Plates, Shapes, and Bars: ASTM A 36

C. Steel Pipe: ASTM A53

1. Black finish, unless otherwise indicated.

2. Galvanized finish for exterior installations, unless shown to receive special coatings.

3. Type E, OR S, Grade B, Fy = 35 KSI, unless otherwise indicated, or another weight, type, and grade required by structural loads.

Reviewed for Code Compliance
Inspections Division
Approved with Conditions
Date: 10/31/17

D. Gray Iron Castings: ASTM A 48, Class 30

E. Malleable Iron Castings: ASTM A 47, Grade 32510

F. Brackets, Flanges and Anchors: Cast or formed metal of the same type material and finish as supported rails, unless otherwise indicated.

G. Concrete Inserts: Threaded or wedge type; galvanized ferrous castings, either malleable iron, ASTM A 47, or cast steel, ASTM A 27. Provide bolts, washers, and shims as required, hot-dip galvanized per ASTM A 153.

H. Welding Rods: Select in accordance with AWS Specifications for the metal alloy to be welded.

2.02 FASTENERS

A. General: Provide zinc-coated fasteners for exterior use or where built into exterior walls. Select fasteners for the type, grade, and class required for each application and complying with applicable standards.

1. Bolts and Nuts: Regular hexagon head bolts, ASTM A-307, Grade A with hex nuts ASTM A 563; and, where indicated, flat washers.

2. Anchor Bolts: ASTM F 1554, Grade30

3. Lag Bolts: Square head type, ASME B18.2.1

4. Machine Screws: Cadmium plated steel, ASME B18.6.3

5. Wood Screws: Flat head carbon steel, ASME B18.6.1

6. Plain Washers: Round, carbon steel, ASME B18.22.1

7. Lock Washers: Helical, spring type, carbon steel, ASME B18.21.1

8. Expansion Anchors: Anchor bolt and sleeve assembly of material indicated below with capability to sustain, without failure, a load equal to six times the load imposed when installed in unit masonry and equal to four times the load imposed when installed in concrete, as determined by testing per ASTM E 488, conducted by a qualified independent testing agency.

a. Interior Use - Material: Carbon-steel components zinc-plated to comply with ASTM B 633, Class Fe/Zn 5.

b. Exterior and Swimming Pool Use - Material: Alloy Group 1 or 2 stainless-steel bolts complying with ASTM F 593 and nuts complying with ASTM F 594.

9. Toggle Bolts: FS FF-B-588, tumble-wing type, class and style as needed.

2.03 GROUT AND ANCHORING CEMENT

A. Nonshrink Nonmetallic Grout: Premixed, factory-packaged, nonstaining, noncorrosive, nongaseous grout complying with ASTM C 1107. Provide grout specifically recommended by manufacturer for interior and exterior heavy-duty loading applications of type specified in this Section.

Reviewed for Code Compliance
Inspections Division
Approved with Conditions
Date: 10/31/17

B. Approved Manufacturers:

1. "Euco N-S Grout", Euclid Chemical Co. (800-321-7628)
2. "Masterflow 713", ChemRex, a Degussa Company (800-433-9517)
3. "Sonogrout", Sonneborn Building Products Division, ChemRex, Inc. (800-243-6739)

C. Interior Anchoring Cement: Factory-prepackaged, nonshrink, nonstaining, hydraulic controlled expansion cement formulation for mixing with water at Project site to create pourable anchoring, patching, and grouting compound. Use for interior applications only.

D. Erosion-Resistant Anchoring Cement: Factory-prepackaged, nonshrink, nonstaining, hydraulic controlled expansion cement formulation for mixing with water at Project site to create pourable anchoring, patching, and grouting compound. Provide formulation that is resistant to erosion from water exposure without need for protection by a sealer or waterproof coating and is recommended for exterior use by manufacturer.

2.04 CONCRETE FILL AND REINFORCING MATERIALS

A. Concrete Materials and Properties: Comply with requirements of Section 03300, and as shown on Drawings, with minimum 28-day compressive strength of 3,000 PSI, unless otherwise indicated.

B. Non-slip Aggregate Finish: Factory-graded, packaged material containing fused aluminum oxide grits or crushed emery as abrasive aggregate; rustproof and non-glazing; unaffected by freezing, moisture, or cleaning materials.

C. Reinforcing Bars: ASTM A-615, Grade 60, unless noted otherwise.

2.05 PAINT

A. Shop Primer for Ferrous Metal: Manufacturer's or fabricator's standard, fast-curing, lead and chromate-free, universal modified alkyd primer selected for good resistance to normal atmospheric corrosion, for compatibility with finish paint systems indicated, and for capability to provide a sound foundation for field-applied topcoats despite prolonged exposure complying with performance requirements of FS TT-P-664.

B. Approved Manufacturers:

1. Carboline 621; Carboline Co. (800-848-4645)
2. Aquapon Zinc-Rich Primer 97-670; PPG Industries, Inc. (800-258-6398)
3. Tneme-Zinc 90-97; Tnemec Co. (800-863-6321)

1.2 Galvanizing Repair Paint: High zinc dust content paint for regalvanizing welds in galvanized steel, with dry film containing not less than 94 percent zinc dust by weight, and complying with DOD-P-21035 or SSPC-Paint-20.

1.3 Bituminous Paint: Cold-applied asphalt mastic complying with SSPC-Paint 12 except containing no asbestos fibers.

Reviewed for Code Compliance
Inspections Division
Approved with Conditions
Date: 10/31/17

PRODUCT DATA SHEET 1 - FABRICATION - GENERAL

1.1 Form metal fabrications from materials of size, thickness, and shapes indicated but not less than that needed to comply with performance requirements indicated. Work to dimensions indicated or accepted on shop drawings, using proven details of fabrication and support. Use type of materials indicated or specified for various components of each metal fabrication.

1.2 Allow for thermal movement resulting from the following maximum change (range) of exterior metalwork in ambient temperature in the design, fabrication, and installation of installed metal assemblies to prevent buckling, opening up of joints, and overstressing of welds and fasteners. Base design calculations on actual surface temperatures of metals due to both solar heat gain and nighttime sky heat loss. Temperature Change (Range): [120] Degrees F., ambient; [130] degrees F., material surfaces.

1.3 Form exposed work true to line and level with accurate angles and surfaces and straight sharp edges. Ease exposed edges to a radius of approximately 1/32 inch, unless otherwise indicated. Form bent-metal corners to smallest radius possible without causing grain separation or otherwise impairing work. Form exposed connections with hairline joints, flush and smooth, using concealed fasteners wherever possible. Use exposed fasteners of type indicated or, if not indicated, Phillips flathead (countersunk) screws or bolts. Locate joints where least conspicuous.

1.4 Weld corners and seams continuously to comply with AWS recommendations and the following:

A. Use materials and methods that minimize distortion and develop strength and corrosion resistance of base metals.

B. Obtain fusion without undercut or overlap.

C. Remove welding flux immediately.

D. At exposed connections, finish exposed welds and surfaces smooth and blended so that no roughness shows after finishing and contour

1.5 Provide for anchorage of type indicated; coordinate with supporting structure. Fabricate and space anchoring devices to provide adequate support for intended use.

1.6 Shop Assembly: Preassemble items in shop to greatest extent possible to minimize field splicing and assembly. Disassemble units only as necessary for shipping and handling limitations. Use connections that maintain structural value of joined pieces. Clearly mark units for reassembly and coordinated installation. Cut, reinforce, drill and tap miscellaneous metal work as indicated to receive finish hardware, screws, and similar items.

1.7 Fabricate joints that will be exposed to weather in a manner to exclude water, or provide weep holes where water may accumulate.

Reviewed for Code Compliance
Inspections Division
Approved with Conditions
Date: 10/31/17

PRODUCT DATA SHEET 2 - ROUGH HARDWARE

1.1 Furnish bent or otherwise custom fabricated bolts, plates, anchors, hangers, dowels, and other miscellaneous steel and iron shapes as required for framing and supporting woodwork, and for anchoring or securing woodwork to concrete or other structures. Fabricate items to sizes, shapes, and dimensions required. Furnish malleable-iron washers for heads and nuts which bear on wood structural connections; elsewhere, furnish steel washers.

PRODUCT DATA SHEET 3 - STEEL LADDERS

1.1 General: Fabricate ladders for the locations shown, with dimensions, spacings, and anchorages as indicated. Comply with requirements of ANSI A14.3.

1.2 Siderails: Continuous, steel, 1/2" x 2-1/2" flat bars, with eased edges, space 18" apart.

1.3 Bar Rungs: 3/4" diameter steel bars, spaced 12" o.c.

1.4 Fit rungs in centerline of side rails, plug weld and grind smooth on outer rail faces.

1.5 Support each ladder at top and bottom and at intermediate points space not more than 5' o.c. with welded or bolted steel brackets.

1.6 Provide nonslip surfaces on top of each rung, either by coating the rung with aluminum-oxide granules set in epoxy-resin adhesive, or by using a type of manufacture rung that is filled with aluminum-oxide grout.

1.7 Provide ladder safety cages where required by local codes, to comply with ANSI A14.3.

PRODUCT DATA SHEET 4 - LOOSE BEARING AND LEVELING PLATES

1.1 Provide loose bearing and leveling plates for steel items bearing on masonry or concrete construction, made flat, free from warps or twists, and of required thickness and bearing area. Drill plates to receive anchor bolts and for grouting as required. Galvanize after fabrication.

PRODUCT DATA SHEET 5 - LOOSE STEEL LINTELS

1.1 Fabricate loose structural steel lintels from steel angles and shapes of size indicated for openings and recesses in masonry walls and partitions at locations indicated. Weld adjoining members together to form a single unit where indicated.

1.2 Hot-dipped galvanized loose steel lintels located in exterior walls.

1.3 Size loose lintels for equal bearing of one inch per foot of clear span but not less than 8 inches bearing at each side of openings, if not indicated on Drawings.

PRODUCT DATA SHEET 6 - MISCELLANEOUS FRAMING AND SUPPORTS

1.1 General: Provide steel framing and supports for applications indicated or those which are not a part of structural steel framework, as required to complete work.

1.2 Fabricate units to sizes, shapes, and profiles indicated and required to receive adjacent other construction retained by framing and supports. Fabricate from structural steel shapes, plates, and steel bars of welded construction using mitered joints for field connection. Cut, drill, and tap units to receive hardware, hangers, and similar items.

Reviewed for Code Compliance
Inspections Division
Approved with Conditions
Date: 10/31/17

A. Equip units with integrally welded anchors for casting into concrete or building into masor Furnish inserts if units must be installed after concrete is placed. Spacing of anchors shall n be more than 24" o.c.

PRODUCT DATA SHEET 7 - MISCELLANEOUS STEEL TRIM

1.1 Provide shapes and sizes indicated for profiles shown. Unless otherwise indicated, fabricate units from structural steel shapes, plates, and steel bars, with continuously welded joints and smooth exposed edges. Use concealed field splices wherever possible. Provide cutouts, fittings, and anchorages as required for coordination of assembly and installation with other work.

A. Galvanize miscellaneous framing and supports in exterior locations and where shown to be painted.

PRODUCT DATA SHEET 8 - FINISHES, GENERAL

1.1 Comply with NAAMM "Metal Finishes Manual" for “Architectural and Metal Products” for recommendations relative to application and designations of finishes. Finish metal fabrications after assembly.

PRODUCT DATA SHEET 9 - STEEL AND IRON FINISHES

1.1 Galvanizing: For those items indicated for galvanizing, apply zinc-coating by the hot-dip process in compliance with the following requirements:

A. ASTM A-153 for galvanizing iron and steel hardware.

B. ASTM A-123 for galvanizing both fabricated and unfabricated iron and steel products made of uncoated rolled, pressed, and forged shapes, plates, bars, and strip 0.0299 inch thick and heavier.

1.2 Preparation for Shop Priming: Prepare uncoated ferrous metal surfaces to comply with minimum requirements indicated below for SSPC surface preparation specifications and environmental exposure conditions of installed metal fabrications: Interiors (SSPC Zone 1A): SSPC-SP3 "Power Tool Cleaning".

1.3 Apply shop primer to uncoated surfaces of metal fabrications, except those with galvanized finish or to be embedded in concrete, sprayed-on fireproofing, or masonry, unless otherwise indicated. Comply with requirements of SSPC-PA1 "Paint Application Specification No. 1" for shop painting. Stripe paint all edges, corners, crevices, bolts, welds, and sharp edges.

SCHEDULE 1 - EXECUTION

PRODUCT DATA SHEET 0 - PREPARATION

1.1 Coordinate and furnish anchorages, setting drawings, diagrams, templates, instructions, and directions for installation of anchorages, including concrete inserts, sleeves, anchor bolts, and miscellaneous items having integral anchors that are to be embedded in concrete or masonry construction. Coordinate delivery of such items to project site. Set sleeves in concrete with tops flush with finish surface elevations; protect sleeves from water and concrete entry.

Reviewed for Code Compliance
Inspections Division
Approved with Conditions
Date: 10/31/17

PRODUCT DATA SHEET 1 - INSTALLATION

1.1 Fastening to In-Place Construction: Provide anchorage devices and fasteners where necessary for securing miscellaneous metal fabrications to in-place construction; include threaded fasteners for concrete and masonry inserts, toggle bolts, through-bolts, lag bolts, wood screws, and other connectors as required.

1.2 Cutting, Fitting, and Placement: Perform cutting, drilling, and fitting required for installation of miscellaneous metal fabrications. Set metal fabrication accurately in location, alignment, and elevation; with edges and surfaces level, plumb, true, and free of rack; and measured from established lines and levels.

1.3 Provide temporary bracing or anchors in formwork for items that are to be built into concrete masonry or similar construction.

1.4 Field Welding: Comply with AWS Code for procedures of manual shielded metal-arc welding, appearance and quality of welds made, methods used in correctly welding work, and the following:

A. Use materials and methods that minimize distortion and develop strength and corrosion resistance of base metals.

B. Obtain fusion without undercut or overlap.

C. Remove welding flux immediately.

D. At exposed connections, finish exposed welds and surfaces smooth and blended so that no roughness shows after finishing and contour of welded surface matches those adjacent.

PRODUCT DATA SHEET 2 - SETTING BEARING AND LEVELING PLATES

1.1 Clean concrete and masonry bearing surfaces of any bond-reducing materials, and roughen to improve bond to surfaces. Clean bottom surface of plates.

1.2 Set leveling and bearing plates on wedges, shims, or leveling nuts. After the bearing members have been positioned and plumbed, tighten the anchor bolts. Do not remove wedges or shims, but if protruding, cut off flush with the edge of the bearing plate before packing with grout.

A. Use nonmetallic nonshrink grout, unless otherwise indicated.

B. Pack grout solidly between bearing surfaces and plates to ensure that no voids remain.

PRODUCT DATA SHEET 3 - TOUCH-UP PAINTING: Immediately after erection, clean field welds, bolted connections, and abraded areas of shop paint, and paint exposed areas with same material as used for shop painting to comply with SSPC-PA1 requirements for touch-up of field painted surfaces.

1.1 Apply by brush or spray to provide a minimum dry film thickness of 2.0 mils.

1.2 For galvanized surfaces clean welds, bolted connections and abraded areas and apply galvanizing repair paint to comply with ASTM A 780.

END OF SECTION

Reviewed for Code Compliance
Inspections Division
Approved with Conditions
Date: 10/31/17

SECTION 05517

ALTERNATING TREAD STEEL STAIRS

PART 1 - GENERAL

1.1 RELATED DOCUMENTS:

Drawings and general provisions of Contract, including General and Supplementary Conditions and Division-1 Specification sections, apply to work of this section.

1.2 SUMMARY:

A. Provide all material, labor, equipment and services and perform all operations necessary or required for the work of this section, in accordance with the Drawings and Specifications, and including fabrication and installation of Alternating Tread Steel Stairs.
B. Related work specified elsewhere includes but is not limited to:
    1. Metal Fabrications in another Division 5 section
    2. Painting in Division 9

1.3 PERFORMANCE REQUIREMENTS:

A. Stair Treads: be capable of withstanding a concentrated 1000 pound load without deformation
B. Handrail: be capable of withstanding a load of 200 pounds applied in any direction at any point on the rail.

1.4 CONSTRUCTION REQUIREMENTS:

A. Landings, Treads, and Mounting Base: shall be stamped and formed from single piece material. Stock shapes, hand forming, or welded remnants shall not be permitted. All stamped parts shall have integrally formed rigidizing bends and shall be spot welded to stringers of like material.
B. Welds: shall be a minimum of 8 welds per tread, and 12 welds each on the landing and mounting base. Each weld shall be quality controlled and be capable of withstanding a minimum of 2800 lbs. in shear.
C. Pedestrian Surfaces: shall be punched through with upset non-skid openings.
D. Riser Spacing: shall be equally spaced to within 3/16" for adjacent risers and to within 3/8" for any two non-adjacent risers on a stair.
E. Handrails: shall be contoured for body guidance and underarm suppor and shall be attached to the outside stringers and landings by bolting.
F. Landing Reinforcement: shall be with 1/4" steel angle notched and punched and factory welded to the landing at the points of a handrail attachment.
G. Rubber Foot Divider: shall be affixed to the central portion of the landing. A rubber bumper strip shall be attached or will be provided for field attaching to the central stringer.

1.5 DIMENSIONS:

A. Stair Angle: 68 degrees from horizontal.

Reviewed for Code Compliance
Inspections Division
Approved with Conditions
Date: 10/31/17

B. Vertical Drop: the change in elevation between the upper finished floor surface where the top landing will be attached and the lower finished floor surface where the base of the stair will be secured.

1.6 SUBMITTALS:

Dimensional Prints: shall be submitted for approval prior to fabrication.

PART 2- PRODUCTS

2.1 ACCEPTABLE MANUFACTURER:

A. Lapeyre Stair, Inc.
220 Laitram Lane
Harahan, LA. 70123;

2.2 MATERIALS:

A. Carbon Steel:
   1. Treads: 13 Gauge 1010/15 HRPO per ASTM A569
   2. Landing & Foot Stampings: 11 Gauge 1010/15 per ASTM A569
   3. Stringers: 3" x 1 3/4" x 11 Gauge 1010/15 for 56 degree stairs over 10 vertical feet and for 68 degree stairs over 12 vertical feet.
   4. Handrails: 1 1/2" OD x 0.083" 1010/15 CS per ASTM A569 cold drawn, fully annealed tube per ASTM 513.
B. Miscellaneous Material:
   1. Rubber Spine: Hollow neoprene.
   2. Rubber Foot Divider: Solid neoprene

2.3 FINISHES:

A. Carbon Steel:
   1. Gray Primer: Powder Coat Baked Enamel

2.4 FABRICATION:

A. General: Fabricate alternating tread steel stairs to conform with performance and construction requirements, and in accordance with approved shop drawings or dimensional prints. Fabricate and shop-assemble to greatest extent possible.
B. Carbon Steel: gas metal arc welded with treads spot welded to stringers and bolt-on handrails with included bolts using the specified materials.

PART 3- EXECUTION:

3.1 PREPARATIONS:

A. Coordination: Coordinate start and installation of steel alternating treads with all other related and adjacent work. Installation shall not start until the construction has progressed to the point that weather conditions and remaining construction operations will not damage stair installation.

Reviewed for Code Compliance
Inspections Division
Approved with Conditions
Date: 10/31/17

B. Verification: Verify that dimensions and angle are correct and that substrate is in proper condition for stair installation. Do not proceed to install until all necessary corrections have been made.

3.2 INSTALLATION:

A. If bumper has not been installed at the factory, install the bumper in accordance with the manufacturer's instructions using glue supplied with the stair.
B. Prepare mounting holes.
C. Position stair with top tread at same elevation as upper finished floor or roof surface.
D. Secure stair with not less than 2 bolts or studs at top and with not less than 2 at bottom of stair.
E. Touch up with matching paint any chipped or abraded damage to factory finish.

3.3 CLEAN:

Leave work area clean and free of debris.

END OF SECTION

Reviewed for Code Compliance
Inspections Division
Approved with Conditions
Date: 10/31/17

SECTION 05520

HANDRAILS AND RAILINGS

PART 1 GENERAL

1.01 SUMMARY

A. Section Includes:

1. Interior Railings

B. Related Sections:

1. Section 03300 - Cast-In-Place Concrete
2. Section 05500 - Metal Fabrications
3. Section 09900 - Paints and Coatings

1.02 DEFINITIONS

A. Definitions in ASTM E 985 for railing-related terms apply to this Section.

1.03 PERFORMANCE REQUIREMENTS

A. General: In engineering handrail and railing systems to withstand structural loads indicated, determine allowable design working stresses of railing materials based on the following:

1. For Cold-Formed Structural Steel: AISI "Specification for Design of Cold-Formed Steel Structural Members".

B. Structural Performance of Handrails and Railing Systems: Engineer, fabricate, and install handrails and railing systems to withstand the following structural loads without exceeding the allowable design working stress of the materials for handrails, railing systems, anchors, and connections. Apply each load to produce the maximum stress in each of the respective components comprising handrails and railing systems.

1. Top Rail of Guardrail Systems: Capable of withstanding the following loads applied as indicated:

a. Designed to resist a load of 50 pounds per linear foot (pound per foot) applied in any direction at the top and to transfer this load through the supports to the structure.

b. Concentrated Load: Handrail assemblies and guards shall be able to resist a single concentrated load of 200 pounds applied in any direction at any point along the top, and have attachment devices and supporting structure to transfer this loading to appropriate structural elements of the building. This load need not be assumed to act concurrently with the loads specified in the paragraph above.

c. Designed to withstand a horizontally applied normal load of 50 pounds on an area not to exceed 1 square foot including openings and space between rails.

C. Control of Corrosion: Prevent galvanic action and other forms of corrosion by insulating metals and other materials from direct contact with incompatible materials.

Reviewed for Code Compliance
Inspections Division
Approved with Conditions
Date: 10/31/17

D. Thermal Movements: Allow for thermal movement resulting from the following maxim change (range) in ambient temperature in the design, fabrication, and installation handrails and railings to prevent buckling, opening up of joints, overstressing of components, connections, and other detrimental effects. Base design calculation on actual surface temperatures of materials due to both solar heat gain and nighttime sky heat loss.

1. Temperature Change (Range): 120 deg. F. ambient; 180. materials surfaces.

1.04 SUBMITTALS

A. General: Submit the following in accordance with Conditions of Contract and Division 1 Specification Sections.

1. Shop Drawings showing fabrication and installation of handrails and railings including plans, elevations, sections, details of components, and attachments to other units of Work.

a. Where installed products are indicated to comply with certain design loadings, include structural computations, materials properties, and other information needed for structural analysis that has been signed and sealed by a qualified professional engineer responsible for their preparation.

1.05 QUALITY ASSURANCE

A. Engineering Responsibility: Engineer handrails and railing systems by qualified professional engineer legally authorized to practice in jurisdiction where Project is located.

1.06 DELIVERY, STORAGE, AND HANDLING

A. Store handrails and railing systems in clean, dry location, away from uncured concrete and masonry, protected against damage of any kind. Cover with waterproof paper, tarpaulin, or polyethylene sheeting; allow for air circulation inside the covering.

1.07 PROJECT CONDITIONS

A. Field Measurements: Where handrails and railings are indicated to fit to other construction, check actual dimensions of other construction by accurate field measurements before fabrication; show recorded measurements on final shop drawings. Coordinate fabrication schedule with construction progress to avoid delay of Work.

1. Where field measurements cannot be made without delaying the Work, guarantee dimensions and proceed with fabrication of products without field measurements. Coordinate other construction to ensure that actual dimensions correspond to guaranteed dimensions.

1.08 SEQUENCING

A. Sequence and coordinate installation of handrails and railings as follows:

1. Mount handrails only on completed walls. Do not support handrails temporarily by any means not satisfying structural performance requirements.

2. Mount handrails only on gypsum board assemblies reinforced to receive anchors and where the location of concealed anchor plates has been clearly marked for benefit of installer. Do not support temporarily by any means that does not satisfy structural performance requirements.

Reviewed for Code Compliance
Inspections Division
Approved with Conditions
Date: 10/31/17

PART 2 PRODUCTS

2.01 METALS

A. General: Provide metal forms and types that comply with requirements of referenced standards and that are free from surface blemishes where exposed to view in the finished unit. Exposed-to-view surfaces exhibiting pitting, seam marks, roller marks, stains, discolorations, or other imperfections on finished units are not acceptable.

B. Steel Pipe: ASTM A-53; finish, type, and weight class as follows:

1. Black finish, unless otherwise indicated.
2. Galvanized finish where indicated.
3. Type S, Grade A, standard weight (Schedule 40), unless otherwise indicated, or another weight required by structural loads.

C. Steel Plates, Shapes, and Bars: ASTM A-36

D. Gray Iron Castings: ASTM A-48, Class 30

E. Malleable Iron Castings: ASTM A-47, Grade 32510

1. Bracket:
   a. Approved Manufacturers:
      1) “Model 950”; Trimco/BBW/Quality (800-637-8746)

F. Fittings: Steel Elbows, Tee-Shapes, Wall Brackets, Escutcheons

G. Mounting: Brackets and Flanges: Steel inserts for casting or setting in new and existing concrete and with steel brackets for embedding into masonry.

H. Cast-In-Place and Post-Installed Anchors in Concrete: Anchors of type indicated below, fabricated from corrosion-resistant materials with capability to sustain, without failure, load imposed within a safety factor of 4, as determined by testing per ASTM E-488, conducted by a qualified independent testing laboratory.

1. Sleeves: For steel posts set in concrete, fabricate sleeves from steel pipe not less than 6 inches long with an inside diameter not less than 1/2 inch greater than the outside diameter of post, with steel plate closure welded to bottom of sleeve.

2.02 GROUT AND ANCHORING CEMENT

A. Nonshrink, Nonmetallic Grout: Premixed, factory-packaged, nonstaining, noncorrosive, nongaseous grout complying with ASTM C 1107. Provide grout specifically recommended by manufacturer for interior and exterior applications of type specified in this Section.

B. Approved Manufacturers:

1. "Euco N-S Grout", Euclid Chemical Co. (800-321-7628)
2. "Masterflow 713", Master Builders (800-628-9990)
3. "Sonogrout", Sonneborn Building Products Division, Rexnord Chemical Products, Inc. (800-433-9517)

Reviewed for Code Compliance
Inspections Division
Approved with Conditions
Date: 10/31/17

C. Interior Anchoring Cement: Factory-prepackaged, nonshrink, nonstaining, hydrau controlled expansion cement formulation for mixing with water at Project site to cre pourable anchoring, patching, and grouting compound. Use for interior applications only.

D. Erosion-Resistant Anchoring Cement: Factory-prepackaged, nonshrink, nonstaining, hydraulic controlled expansion cement formulation for mixing with water at Project site to create pourable anchoring, patching, and grouting compound. Provide formulation that is resistant to erosion from water exposure without need for protection by a sealer or waterproof coating and is recommended for exterior use by manufacturer.

2.03 PAINT

A. Refer to Section 09960 for Special Coatings used for exterior railings.

B. Shop Primer: Manufacturers or Fabricators standard, fast-curing, lead and chromate-free, primer with performance requirements in FS TT-P-664; selected for resistance to normal atmosperic corrosion, for compatibility with substrate and field-applied finish paint system indicated, and for capability to provide a sound foundation for field-applied topcoats despite prolonged exposure.

C. Galvanizing Repair Paint: High-zinc-dust-content paint for regalvanizing welds in galvanized steel, with dry film containing not less than 94 percent zinc dust by weight, and complying with DOD-P-21035 or SSPC-Paint-20.

D. Bituminous Paint: Cold-applied asphalt mastic complying with SSPC-Paint 12 except containing no asbestos fibers.

2.04 WELDING MATERIALS, FASTENERS, AND ANCHORS

A. Welding Electrodes and Filler Metal: Provide type and alloy of filler metal and electrodes as recommended by producer of metal to be welded and as required for color match, strength, and compatibility in fabricated items.

B. Fasteners for Anchoring Railings to Other Construction: Select fasteners of the type, grade, and class required to produce connections that are suitable for anchoring railing to other types of construction indicated and capable of withstanding design loadings.

1. For steel railings and fittings use plated fasteners complying with ASTM B-633, Class Fe/Zen 25 for electro-deposited zinc coating.

C. Fasteners for Interconnecting Railing Components: Use fasteners of same basic metal as the fastened metal, unless otherwise indicated. Do not use metals that are corrosive or incompatible with materials jointed.

1. Provide concealed fasteners for interconnection of handrail and railing components and for their attachment to other work except where exposed fasteners are unavoidable or are the standard fastening method for handrail and railing system indicated.

2. Provide Phillips flat-head machine screws for exposed fasteners, unless otherwise indicated.

Reviewed for Code Compliance
Inspections Division
Approved with Conditions
Date: 10/31/17

2.05 FABRICATION

A. General: Fabricate handrails and railing systems to comply with requirements indicated for design, dimensions, details, finish, and member sizes, including wall thickness of hollow members, post spacings, and anchorage, but not less than those required to support structural loads.

B. Preassemble railing systems in the shop to greatest extent possible to minimize field splicing and assembly. Disassemble units only as necessary for shipping and handling limitations. Clearly mark units for reassembly and coordinated installation. Use connections that maintain structural value of jointed pieces. Clearly mark units for reassembly and coordinated installation.

C. Form changes in direction of railing members as shown on Drawings.

D. Form simple and compound curves by bending pipe in jigs to produce uniform curvature for each repetitive configuration required; maintain cylindrical cross-section of pipe throughout entire bend without buckling, twisting, cracking, or otherwise deforming exposed surfaces of pipe.

E. Welded Connections: Fabricate railing systems and handrails for connection of members by welding. For connections made during fabrication, weld corners and seams continuously to comply with the following:

1. Use materials and methods that minimize distortion and develop strength and corrosion resistance of base metals.
2. Obtain fusion without undercut or overlap.
3. Remove welding flux immediately.
4. At tee and cross intersections, notch ends of intersecting members to fit contour of pipe to which end is joined and weld all around.
5. At exposed connections, finish exposed welds and surfaces smooth and blended so that no roughness shows after finishing and contour of welded surface matches those adjacent.

F. Nonwelded Connections: Fabricate railing systems and handrails for connection of members by means of railing manufacturer's standard concealed mechanical fasteners and fittings to produce flush, smooth, rigid, hairline joints.

1. Fabricate splice joints for field connection using epoxy structural adhesive where this represents manufacturer's standard splicing method.

G. Brackets, Flanges, Fittings and Anchors: Provide manufacturer's standard wall brackets, flanges, miscellaneous fittings and anchors for interconnection of handrail and railing members to other work, unless otherwise indicated.

H. Provide inserts and other anchorage devices for connecting handrails and railing systems to concrete or masonry work. Fabricate anchorage devices which are capable of withstanding loadings imposed by handrails and railing systems. Coordinate anchorage devices with supporting structure.

I. Shear and punch metals cleanly and accurately. Remove burrs from exposed cut edges.

Reviewed for Code Compliance
Inspections Division
Approved with Conditions
Date: 10/31/17

J. Ease exposed edges to a radius of approximately 1/32 inch, unless otherwise indicat Form bent-metal corners to smallest radius possible without causing grain separation otherwise impairing work.

K. Cut, reinforce, drill, and tap miscellaneous metal work as indicated to receive finish hardware, screws, and similar items.

L. For handrails and railing systems that are exposed to exterior or to moisture from condensation or other sources, provide weepholes or other means for evacuation of entrapped water in hollow sections of railing members.

M. Fabricate joints that will be exposed to weather in a manner to exclude water.

N. Provide wall returns at ends of wall-mounted handrails, unless otherwise indicated.

O. Fillers: Provide steel sheet or plate fillers of thickness and size n indicated or required to support structural loads of handrails where needed to transfer wall bracket loads through wall finishes to structural supports. Size fillers to suit wall finish thicknesses to produce adequate bearing to prevent bracket rotation and overstressing of substrate.

2.06 STEEL FINISHES

A. Comply with NAAMM "Metal Finishes Manual" for recommendations relative to application and designations of finishes.

B. Protect mechanical finishes on exposed surfaces from damage by application of strippable, temporary protective covering prior to shipment.

C. Appearance of Finished Work: Variations in appearance of abutting or adjacent pieces are acceptable if they are within 1/2 of the range of approved samples. Noticeable variations in the same piece are not acceptable. Variation in appearance of other components are acceptable if they are within range of approved samples and they are assembled or installed to minimize contract.

D. Interior:

1. Preparation for Shop Priming: Prepare uncoated ferrous metal surfaces to comply with minimum requirements indicated below for SSPC surface preparation specifications and environmental exposure conditions of installed metal fabrications.

   a. Interiors (SSPC Zone 1A): SSPC-SP7 "Brush-Off Blast Cleaning".

2. Apply shop primer to uncoated surfaces of handrails and railing components, except those with galvanized finish or to be embedded in concrete or masonry, unless otherwise indicated. Comply with requirements of SSPC-PA1 "Paint Application Specification No. 1" for shop painting.

3. Stripe paint all edges, corners, crevices, bolts, welds, and sharp edges.

PART 3 EXECUTION

3.01 PREPARATION

A. Coordinate setting drawings, diagrams, templates, instructions, and directions for installation of anchorages, such as sleeves, concrete inserts, anchor bolts, and miscellaneous items having integral anchors that are to be embedded in concrete as masonry construction. Coordinate delivery of such items to project site.

Reviewed for Code Compliance
Inspections Division
Approved with Conditions
Date: 10/31/17

3.02 INSTALLATION

A. Fit exposed connections accurately together to form tight, hairline joints.

B. Perform cutting, drilling, and fitting required for installation of handrails and railings. Set handrails and railings accurately in location, alignment, and elevation, measured from established lines and levels and free from rack.

1. Do not weld, cut, or abrade surfaces of handrails and railing components that have been coated or finished after fabrication and are intended for field connection by mechanical or other means without further cutting or fitting.

2. Set posts plumb within a tolerance of 1/4 inch in 12 feet.

3. Align rails so that variations from level for horizontal members and from parallel with rake of steps and ramps for sloping members do not exceed 1/4 inch in 12 feet.

C. Field Welding: Comply with the following requirements:

1. Use materials and methods that minimize distortion and develop strength and corrosion resistance of base metals.

2. Obtain fusion without undercut or overlap.

3. Remove welding flux immediately.

4. At exposed connections, finish exposed welds and surfaces smooth and blended so that no roughness shows after finishing and contour of welded surface matches those adjacent.

D. Corrosion Protection: Coat concealed surfaces of aluminum that will come into contact with grout, concrete, masonry, wood, or dissimilar metals with a heavy coat of bituminous paint or zinc chromate primer.

E. Fastening to In-Place Construction: Provide anchorage devices and fasteners where necessary for securing handrails and railings to in-place construction.

3.03 ANCHORING POSTS

A. Adjust handrails and railing systems prior to anchoring to ensure matching alignment at abutting joints. Space posts at interval indicated but not less than that required by design loadings.

B. Anchor posts in concrete by means of pipe sleeves preset and anchored into concrete where shown on Drawings. After posts have been inserted into sleeves, fill annular space between post and sleeve solid with the following anchoring material, mixed and placed to comply with anchoring material manufacturer's directions.

C. Anchor posts in concrete by core drilling holes, where shown on drawings, not less than 5 inches deep and 3/4 inch greater than outside diameter of post. Clean holes of all loose material, insert posts, and fill annular space between post and concrete with the following anchoring material, mixed and placed to comply with anchoring material manufacturer's directions.

1. Nonshrink, nonmetallic grout or anchoring cement.

Reviewed for Code Compliance
Inspections Division
Approved with Conditions
Date: 10/31/17

3.04 RAILING CONNECTIONS

A. Nonwelded Connections: Use manufacturer's standard mechanical for permanently connecting railing components. Use wood blocks and padding to prevent damage to railing members and fittings. Seal recessed holes of exposed locking screws with plastic filler cement colored to match finish of handrails and railing systems.

B. Welded Connections: Use fully welded joints for permanently connecting railing components by welding. Cope or butt components to provide 100 percent contact or use manufacturer's standard fittings designed for this purpose.

3.05 ANCHORING RAIL ENDS

A. Anchor rail ends into concrete and masonry with round flanges connected to rail ends and anchored into wall construction with post-installed anchors and bolts.

B. Anchor rail end to metal surfaces with oval or round flanges.

3.06 ATTACHMENT OF HANDRAILS TO WALLS

A. Attach handrails to wall with wall brackets and end fittings. Provide bracket with not less than 2-1/4 inch clearance from inside face of handrail and finished wall surface.

B. Locate brackets as indicated or, if not indicated, at spacing required to support structural loads.

C. Secure wall brackets and wall return fittings to building construction as follows:

1. Use type of bracket with predrilled hole for exposed bolt anchorage.

2. For concrete and solid masonry anchorage, use drilled-in expansion shield and either concealed hanger bolt or exposed lag bolt, as applicable.

3. For hollow masonry anchorage, use toggle bolts with square heads.

4. For steel-framed gypsum board assemblies, fasten brackets directly to steel framing or concealed anchors using self-tapping screws of size and type required to support structural loads.

3.07 ADJUSTING AND CLEANING

A. Touch-Up Painting: Immediately after erection, clean field welds, bolted connections, and abraded areas of shop paint, and paint exposed areas with same material.

B. For Galvanized Surfaces: Clean field welds, bolted connections, and abraded areas and apply galvanizing repair pint to comply with ASTM A780.

3.08 PROTECTION

A. Protect finishes of railing systems and handrails from damage during construction period by use of temporary protective coverings approved by railing manufacturer. Remove protective covering at time of Substantial Completion.

B. Restore finishes damaged during installation and construction period so that no evidence remains of correction work. Return items that cannot be refinished in the field to the shop. Make required alterations and refinish entire unit or provide new units.

END OF SECTION

Reviewed for Code Compliance
Inspections Division
Approved with Conditions
Date: 10/31/17

SECTION 06100
ROUGH CARPENTRY

PART 1 GENERAL

1.01 SUMMARY

A. This Section includes the following:
   1. Framing with dimension lumber
   2. Framing with engineered wood products
      a. Parallam parallel strand lumber (PSL),
      b. Microllam laminated veneer lumber (LVL)
      c. Timberstrand laminated strand lumber (LSL)
      d. Prefabricated Wood I-Joist (IJ)
   3. Framing with preservative-treated wood products
   4. Framing with fire-retardant-treated wood products
   5. Rooftop equipment bases and support curbs
   6. Wood furring, grounds, nailers, and blocking
   7. Fasteners and metal framing anchors
   8. Sheathing
   9. Subflooring
   10. Underlayment

B. Related Sections:
   1. Section 06175 - Metal-Plate-Connected Wood Trusses
   2. Section 06200 - Finish Carpentry - for nonstructural carpentry items exposed to view and not specified in another Section.
   3. Section 06400 - Architectural Woodwork
   4. Section 10800 - Toilet, Bath, and Laundry Equipment

1.02 DEFINITIONS

A. Rough Carpentry: Carpentry work not specified in other Sections and not exposed, unless otherwise specified.

B. Exposed Framing: Dimension lumber not concealed by other construction and indicated to receive a stained or natural finish.

1.03 SUBMITTALS

A. General: Submit each item in this Article according to the Conditions of the Contract and Division 1 Specification Sections.

B. Product Data : For the following products submit “Letter of Conformance” in accordance with Section 01330 indicating specified items selected for use in Project:
   1. Engineered wood products
   2. Underlayment
   3. Insulating sheathing
   4. Metal framing anchors
   5. Construction adhesives

C. Material certificates for dimension lumber specified to comply with minimum allowable unit stresses. Indicate species and grade selected for each use and design values approved by the American Lumber Standards Committee's (ALSC) Board of Review.

D. Wood treatment data as follows, including chemical treatment manufacturer's instructions for handling, storing, installing, and finishing treated materials:

Reviewed for Code Compliance
Inspections Division
Approved with Conditions
Date: 10/31/17

1. For each type of preservative-treated wood product, include certification by treating pl stating type of preservative solution and pressure process used, net amount of preservative retained, and compliance with applicable standards.
2. For waterborne-treated products, include statement that moisture content of treated materials was reduced to levels indicated before shipment to Project site.
3. For fire-retardant-treated wood products, include certification by treating plant that treated materials comply with specified standard and other requirements as well as data relative to bending strength, stiffness, and fastener-holding capacities of treated materials.

E. Material test reports from a qualified independent testing agency indicating and interpreting test results relative to compliance of fire-retardant-treated wood products with requirements indicated.

F. Warranty of chemical treatment manufacturer for each type of treatment.

G. Shop Drawings: For Engineered Wood Framing Systems provide layout drawings indicating materials, member sizes, member spacing and accessories required for proper installation. Drawings shall clearly reference construction details, loading assumptions (including location of loads transferred from other levels), and minimum live load and total load deflection criteria.
   1. Where installed products are indicated to comply with certain design loadings, include structural computations, materials properties, and other information needed for structural analysis that has been signed and sealed by a qualified professional engineer responsible for their preparation.

H. Research or evaluation reports of the model code organization acceptable to authorities having jurisdiction that evidence the following products' compliance with building code in effect for Project.
   1. Engineered wood products
   2. Metal framing anchors
   3. Power-driven fasteners
   4. Fire-retardant-treated wood
      a. National Evaluation Service, Inc. or approved substitution.

1.04 QUALITY ASSURANCE

A. Testing Agency Qualifications: To qualify for approval, an independent testing agency must demonstrate to Owner's Representative satisfaction, based on evaluation of agency-submitted criteria conforming to ASTM E 699, that it has the experience and capability to satisfactorily conduct the testing indicated without delaying the Work.

B. Single-Source Responsibility for Fire-Retardant-Treated Wood: Obtain each type of fire-retardant-treated wood product from one source and by a single producer.

C. Single-Source Responsibility for Engineered Wood Products: Obtain each type of engineered wood product from one source and by a single manufacturer.

D. Engineering Responsibility: Engineered Wood Framing Systems shall be engineered by qualified professional engineer legally authorized to practice in jurisdiction where Project is located.

E. Product Identification: All Engineered Wood Products System members shall be clearly marked with manufacturer's name, product series, plant identification, date of manufacture, and code compliance.

F. Installation Review: The Engineered Wood Products System Manufacturer's Technical Representative shall be available to meet with the Contractors to review installation details prior to the beginning of framing. The Contractor shall give notification to the Technical Representative prior to enclosing the framing to provide opportunity for review of the installation.

Reviewed for Code Compliance
Inspections Division
Approved with Conditions
Date: 10/31/17

1.05 DELIVERY, STORAGE, AND HANDLING

A. Keep materials under cover and dry. Protect from weather and contact with damp or wet surfaces. Stack lumber, plywood, and other panels. Provide for air circulation within and around stacks and under temporary coverings.

1. For lumber and plywood pressure treated with waterborne chemicals, place spacers between each bundle to provide air circulation.
2. Store Engineered Wood materials on dry surfaces supported on raised wood sticks located every 10 feet. Store TJI joists in an upright position.

PART 2 PRODUCTS

A. Approved Manufacturers:

1. Wood-Preservative-Treated Materials:
   a. Archwood Protection Inc. (770-801-6600)
   b. Hoover Treated Wood Products, Inc. (877-722-6292, ext. 211)
   c. Osmose Wood Preserving, Inc. (800-241-0240)
2. Fire-Retardant-Treated Materials, Interior Type A:
   a. Archwood Protection Inc..(770-801-6600
   b. Hoover Treated Wood Products, Inc. (877-722-6292, ext. 211)
3. Fire-Retardant-Treated Materials, Exterior Type:
   a. Hoover Treated Wood Products, Inc. (877-722-6292, ext. 211)
4. Laminated-Veneer Lumber (LVL):
   a. TrusJoist, a Weyerhaeuser Business (800-338-0515)
   b. Boise Cascade Corporation (800-232-0788)
   c. Louisiana-Pacific Corp. (800-999-9105)
   d. Willamette Industries, A Weyerhaeuser Company (541-926-7771)

5. Parallel-Strand Lumber (PSL):

   a. TrusJoist, a Weyerhaeuser Business (800-338-0515)
   b. Boise Cascade Corporation (800-232-0788)
   c. Louisiana-Pacific Corp. (800-999-9105)
   d. Willamette Industries, A Weyerhaeuser Company (541-926-7771)

6. Prefabricated Wood I-Joists:
   a. TrusJoist, a Weyerhaeuser Business (800-338-0515)
   b. Boise Cascade Corporation (800-232-0788)
   c. Louisiana-Pacific Corp. (800-999-9105)
   d. Willamette Industries, A Weyerhaeuser Company (541-926-7771)

7. Laminated Strand Lumber (LSL):

   a. TrusJoist, a Weyerhaeuser Business (800-338-0515)
   b. Boise Cascade Corporation (800-232-0788)
   c. Louisiana-Pacific Corp. (800-999-9105)
   d. Willamette Industries, A Weyerhaeuser Company (541-926-7771)

Reviewed for Code Compliance
Inspections Division
Approved with Conditions
Date: 10/31/17

8. Glass-Fiber-Surfaced Gypsum Sheathing Board:
   a. “DensGlass Gold Exterior Guard”; Georgia-Pacific Corp. (800-284-5347)
9. Metal Framing Anchors:
   a. Cleveland Steel Specialty Co. (800-251-8351)
   b. USP Lumber Connectors (800-328-5934)
   c. Simpson Strong-Tie Company, Inc. (800-999-5099)
   d. Southeastern Metals Manufacturing Co., Inc. (800-874-0335)

2.02 LUMBER, GENERAL

A. Lumber Standards: Comply with DOC PS 20, "American Softwood Lumber Standard," and with applicable grading rules of inspection agencies certified by ALSC's Board of Review.

B. Inspection Agencies: Inspection agencies, and the abbreviations used to reference them, include the following:
   1. NELMA - Northeastern Lumber Manufacturers Association.
   2. NLGA - National Lumber Grades Authority (Canadian).
   3. RIS - Redwood Inspection Service.
   4. SPIB - Southern Pine Inspection Bureau.
   5. WCLIB - West Coast Lumber Inspection Bureau.
   6. WWPA - Western Wood Products Association.

C. Grade Stamps: Provide lumber with each piece factory marked with grade stamp of inspection agency evidencing compliance with grading rule requirements and identifying grading agency, grade, species, moisture content at time of surfacing, and mill.
   1. For exposed lumber, furnish pieces with grade stamps applied to ends or back of each piece, or omit grade stamps and provide grade-compliance certificates issued by inspection agency.

D. Where nominal sizes are indicated, provide actual sizes required by DOC PS 20 for moisture content specified. Where actual sizes are indicated, they are minimum dressed sizes for dry lumber.
   1. Provide dressed lumber, S4S, unless otherwise indicated.
   2. Provide dry lumber with 19 percent maximum moisture content at time of dressing for 2-inch nominal thickness or less, unless otherwise indicated.
   3. Provide lumber with 15 percent maximum moisture content at time of dressing for 2-inch nominal thickness or less, unless otherwise indicated.

2.03 WOOD-PRESERVATIVE-TREATED MATERIALS

A. General: Where lumber or plywood is indicated as preservative treated or is specified to be treated, comply with applicable requirements of AWPA C2 (lumber) and AWPA C9 (plywood). Mark each treated item with the Quality Mark Requirements of an inspection agency approved by ALSC's Board of Review.
   1. Do not use chemicals containing chromium or arsenic.
   2. For exposed items indicated to receive stained finish, use chemical formulations that do not bleed through, contain colorants, or otherwise adversely affect finishes.

B. Pressure treat above ground items with waterborne preservatives to a minimum retention of 0.25 lb/cu. ft. After treatment, kiln-dry lumber and plywood to a maximum moisture content of 19 and 15 percent, respectively. Treat indicated items and the following:
   1. Wood cants, nailers, curbs, equipment support bases, blocking, stripping, and similar members in connection with roofing, flashing, vapor barriers, and waterproofing.
   2. Wood sills, sleepers, blocking, furring, stripping, and similar concealed members in contact with masonry or concrete.

Reviewed for Code Compliance
Inspections Division
Approved with Conditions
Date: 10/31/17

3. Wood framing members less than 18 inches above grade.
4. Wood floor plates installed over concrete slabs directly in contact with earth.

C. Pressure treat wood members in contact with ground or freshwater with waterborne preservatives to a minimum retention of 0.40 lb/cu. ft.

D. Complete fabrication of treated items before treatment, where possible. If cut after treatment, apply field treatment complying with AWPA M4 to cut surfaces. Inspect each piece of lumber or plywood after drying and discard damaged or defective pieces.

2.04 FIRE-RETARDANT-TREATED MATERIALS

A. General: Where fire-retardant-treated wood is indicated, comply with applicable requirements of ASTM E-84 (lumber) and ASTM 3201 (plywood). Identify fire-retardant-treated wood with appropriate classification marking of UL; U.S. Testing; Timber Products Inspection, Inc.; or another testing and inspecting agency acceptable to authorities having jurisdiction.

1. Provide fire treated wood in all concealed areas of construction, as shown or indicated on the drawings, and as required by code.
2. Research or Evaluation Reports: Provide fire-retardant-treated wood acceptable to authorities having jurisdiction and for which a current model code research or evaluation report exists that evidences compliance of fire-retardant-treated wood for application indicated.
3. For exposed items indicated to receive stained finish, use chemical formulations that do not bleed through, contain colorants, or otherwise adversely affect finishes.

B. Interior Type A: For interior locations, use chemical formulation that produces treated lumber and plywood with the following properties under conditions present after installation:

1. Bending strength, stiffness, and fastener-holding capacities are not reduced below values published by manufacturer of chemical formulation under elevated temperature and humidity conditions simulating installed conditions when tested by a qualified independent testing agency.
2. No form of degradation occurs due to acid hydrolysis or other causes related to treatment.
3. Contact with treated wood does not promote corrosion of metal fasteners.

C. Exterior Type: Use for exterior locations and where indicated. Comply with ASTM D2898.

D. After treatment, kiln-dry lumber and plywood to a maximum moisture content of 19 and 15 percent, respectively

E. Inspect each piece of treated lumber or plywood after drying and discard damaged or defective pieces.

2.05 DIMENSION LUMBER

A. General: Provide dimension lumber of grades indicated according to the ALSC National Grading Rule (NGR) provisions of the inspection agency indicated.

B. Non-Load-Bearing Interior Partitions: Provide framing of the following grade and species:

1. Grade: Construction.
2. Species: Any species with a modulus of of elasticity and an extreme fiber stress in bending as indicated on Drawings
   a. Exception: Southern (yellow) pine is not permitted.

C. Exterior and Load-Bearing Walls: Provide framing of the following grade and species:

1. Grade: No. 2.
2. Species: Any species with a modulus of of elasticity and an extreme fiber stress in bending as indicated on Drawings
   a. Exception: Southern (yellow) pine is not permitted.

D. Ceilings (Non-Load-Bearing): For ceiling framing that does not support a floor, roof, or attic, provide the following grade and species:

Reviewed for Code Compliance
Inspections Division
Approved with Conditions
Date: 10/31/17

1. Grade: Construction or No. 2.
2. Species: Any species with a modulus of of elasticity and an extreme fiber stress in bending as indicated on Drawings
   a. Exception: Southern (yellow) pine is not permitted.

E. Other Framing Not Listed Above: Provide the following grades and species:
1. Grade: No. 1.
2. Species: Any species with a modulus of of elasticity and an extreme fiber stress in bending as indicated on Drawings
   a. Exception: Southern (yellow) pine is not permitted.

F. Exposed Framing: Provide material hand-selected from lumber of species and grade indicated below for uniformity of appearance and freedom from characteristics that would impair finish appearance.
1. Species and Grade: As indicated above for load-bearing construction of same type.

2.06 MISCELLANEOUS LUMBER

A. General: Provide lumber for support or attachment of other construction, including rooftop equipment curbs and support bases, cant strips, bucks, nailers, blocking, furring, grounds, stripping, and similar members.

B. Fabricate miscellaneous lumber from dimension lumber of sizes indicated and into shapes shown.

C. Moisture Content: 15 percent maximum for lumber items not specified to receive wood preservative treatment.

D. Grade: For dimension lumber sizes, provide No. 3 or Standard grade lumber per ALSC's NGRs of any species. For board-size lumber, provide No. 3 Common grade per NELMA, NLGA, or WWPA; No. 2 grade per SPIB; or Standard grade per NLGA, WCLIB or WWPA of any species.

2.07 ENGINEERED WOOD PRODUCTS

A. General: Provide engineered wood products acceptable to authorities having jurisdiction and for which current model code research or evaluation reports exist that evidence compliance with building code in effect for Project.
1. Allowable Design Stresses: Provide engineered wood products with allowable design stresses, as published by manufacturer, that meet or exceed those indicated. Manufacturer's published values shall be determined from empirical data or by rational engineering analysis, and demonstrated by comprehensive testing performed by a qualified independent testing agency.

B. Laminated-Veneer Lumber: Lumber manufactured by laminating wood veneers in a continuous press using an exterior-type adhesive complying with ASTM D 2559 to produce members with grain of veneers parallel to their lengths. Comply with the following requirements:
1. Extreme Fiber Stress in Bending: 2500 psi for 12-inch nominal-depth members.
2. Modulus of Elasticity: 2,000,000 psi
3. Tension Parallel to Grain: 1850 psi
4. Compression Parallel to Grain: 2800 psi
5. Compression Perpendicular to Grain: 400 psi perpendicular to and 500 psi and parallel to glue line.
6. Horizontal Shear: 285 psi perpendicular to and 190 psi parallel to glue line.

C. Parallel-Strand Lumber: Lumber manufactured by laying up wood strands using an exterior-type adhesive complying with ASTM D 2559, and cured under pressure to produce members with grain of strands parallel to their lengths and complying with the following requirements:
1. Extreme Fiber Stress in Bending: 2900 psi for 12-inch nominal-depth members.

Reviewed for Code Compliance
Inspections Division
Approved with Conditions
Date: 10/31/17

2. Modulus of Elasticity: 2,000,000 psi
3. Tension Parallel to Grain: 2400 psi
4. Compression Parallel to Grain: 2900 psi
5. Compression Perpendicular to Grain: 400 psi perpendicular to and 600 psi and parallel to wide face of strands.
6. Horizontal Shear: 210 psi perpendicular to and 290 psi and parallel to wide face of strands.

D. Prefabricated Wood I-Joists: Units manufactured by bonding stress-graded lumber flanges to wood-based structural-use panel webs with exterior-type adhesives complying with ASTM D 2559, produce I-shaped joists complying with the following requirements:

1. Flange Material: Laminated-veneer lumber.
2. Flange Material: Southern pine dimension lumber.
3. Flange Material: Spruce-pine-fir dimension lumber.
4. Flange Material: Any material indicated above, as standard with joist manufacturer.
5. Web Material: Oriented-strand board (OSB) complying with DOC PS 2.
6. Web Material: Plywood complying with DOC PS 2.
7. Web Material: Either material indicated above, as standard with joist manufacturer.
8. Provide continuous "Microllam LVL flanges", by Trus Joist, a Weyerhaeuser Business or approved substitution by other listed manufacturers free from finger or scarf joints for the length of the joists.
9. Provide webs manufactured from "Performance Plus Panels", by Trus Joist, a Weyerhaeuser Business or approved substitution by other listed manufacturers, with saw tooth edge detail interlocked and glued at panel joints. Joist web material must not exceed 12% tested average thickness swell due to moisture.
10. Structural Capacities: Establish and monitor structural capacities according to ASTM D 5055.
11. Sizes: Depths and widths as indicated, with flanges not less than 1-1/2 inches in actual width.

E. Prefabricated Wood Rim Joists:

1. Timberstrand LSL Rim Joist as manufactured by Trus Joist, a Weyerhaeuser Business or approved substitution by other listed manufacturers.
2. Construction: Solid 1-3/4” thick piece of laminated strand lumber sized to match depth of joist.
3. Design Values:
   a. MOE = 1.3×10^6
   b. Vertical Load transfer = 3450 plf (Governed by most restrictive capacity of member or wood plate below)
   c. Lateral Load transfer = 240 plf
4. (Case 1) and 180 plf (Case 3), as governed by horizontal diaphragm.

F. Microllam LVL Beams:

1. Microllam LVL as manufactured by Trus Joist, a Weyerhaeuser Business or approved substitution by other listed manufacturers.
2. Construction: Continuous laminated veneer lumber free from finger or scarf joints. Stress graded veneers bonded with waterproof adhesive with face grain parallel to each adjacent layer. Provide Watershed Overlay coating and edge seal to prevent cupping and moisture damage.
3. Design Values:

Reviewed for Code Compliance
Inspections Division
Approved with Conditions
Date: 10/31/17

a. MOE = 1.9 x 10^6 psi
b. Fb = 2600 psi (for 12" depth)
c. Fc1 = 750 psi
d. Fv = 285 psi.

G. Parallam PSL Beams:
1. Parallam PSL as manufactured by Trus Joist, a Weyerhaeuser Business or approved substitution by other listed manufacturers.
2. Construction: Continuous parallel strand lumber bonded with waterproof adhesives and formed into billets. Beams shall be of single ply construction and free from finger joints or splices for full length of span.
3. Design Values:
a. MOE = 2.0 x 10^6 psi
b. Fb - 2900 psi (for 12" depth)
c. Fc1 = 750 psi
d. Fv = 290 psi.

H. Laminated Strand Lumber Headers:
1. LSL Headers as manufactured by Trus Joist, a Weyerhaeuser Business or approved substitution by other listed manufacturers.
2. Construction: Laminated strand lumber; strands of aspen or yellow poplar bonded with waterproof resins; cured using a steam injection process.
3. Design Values for depths 11.875" or greater:
a. MOE = 1.5 x 10^6 psi
b. Fb = 2250 psi (for 12" depth)
c. Fc1 = 650 psi
d. Fv = 285 psi.
4. Design Values for depths less than 11.875":
a. MOE = 1.3 x 10^6 psi
b. Fb = 1700 psi (for 12" depth)
c. Fc1 = 650 psi
d. Fv = 285 psi.

2.08 WOOD-BASED STRUCTURAL-USE PANELS, GENERAL

A. Structural-Use Panel Standards: Provide either all-veneer, mat-formed, or composite panels complying with DOC PS 2, "Performance Standard for Wood-Based Structural-Use Panels," unless otherwise indicated. Provide plywood panels complying with DOC PS 1, "U.S. Product Standard for Construction and Industrial Plywood," where plywood is indicated.

B. Structural-Use Panel Standard: Provide plywood panels complying with DOC PS 1, "U.S. Product Standard for Construction and Industrial Plywood."

C. Trademark: Factory mark structural-use panels with APA trademark evidencing compliance with grade requirements.

2.09 CONCEALED, PERFORMANCE-RATED STRUCTURAL-USE PANELS

A. General: Where structural-use panels are indicated for the following concealed types of applications, provide APA-performance-rated panels complying with requirements designated under each application for grade, span rating, exposure durability classification, and edge detail (where applicable).
1. Thickness: Provide panels meeting requirements specified but not less than thickness indicated.

Reviewed for Code Compliance
Inspections Division
Approved with Conditions
Date: 10/31/17

2. Span Ratings: Provide panels with span ratings required to meet "Code Plus" provisic of APA Form No. E30, "APA Design/Construction Guide: Residential & Commercial."

B. Combination Subfloor-Underlayment: APA-rated Sturd-I-Floor.
   1. Exposure Durability Classification: Exposure 1.
   2. Span Rating: As indicated.
   3. Minimum Thickness: 3/4 inches.
   4. Edge Detail: tongue and grove
   5. Surface Finish: Fully sanded face.

C. Subflooring: APA-rated sheathing.
   1. Exposure Durability Classification: Exposure 1.
   2. Span Rating: As indicated.
   3. Minimum Thickness: 3/4 inches.

D. Wall Sheathing: Where indicated on drawings, provide APA-rated sheathing.
   1. Exposure Durability Classification: Exposure 1.
   2. Span Rating: 16 for stud spacing of 16 inches or less.
   3. Span Rating:- 24 for stud spacing of 24 inches or less.

E. Roof Sheathing: APA-rated sheathing.
   1. Exposure Durability Classification: Exposure 1.
   2. Span Rating: As indicated.
   3. Minimum Thickness: 5/8 inches.

2.10 STRUCTURAL-USE PANELS FOR BACKING

A. Plywood Backing Panels: For mounting electrical or telephone equipment, provide fire-retardant-treated plywood panels with grade, C-D Plugged Exposure 1, in thickness indicated or, if not otherwise indicated, not less than 15/32 inch thick.

2.11 STRUCTURAL-USE PANELS FOR UNDERLAYMENT

A. General: Over smooth subfloors, provide underlayment not less than 1/4 inch thick. Over board or uneven subfloors, provide underlayment not less than 11/32 inch thick.

B. Plywood Underlayment for Resilient Flooring: For underlayment under 19/32 inch-thick, provide plywood panels with fully sanded face and as follows:
   1. Grade: APA Underlayment Exposure 1.

2.12 GYPSUM SHEATHING

A. Glass-Fiber-Surfaced Gypsum Sheathing Board: Gypsum sheathing board consisting of noncombustible gypsum core incorporating a water-resistant material, surfaced on face and back with glass-fiber mats with alkali-resistant coating, and with unsurfaced square edges; complying with ASTM C 71177, and requirements indicated below:
   1. Type: Type X or as noted on the drawings.
   2. Thickness: 5/8” unless indicated otherwise.

2.13 FASTENERS

A. General: Provide fasteners of size and type indicated that comply with requirements specified in this Article for material and manufacture.
   1. Where rough carpentry is exposed to weather, in ground contact, or in area of high relative humidity, provide fasteners with a hot-dip zinc coating per ASTM A 153 or of Type 304 stainless steel.

B. Nails, Wire, Brads, and Staples: FS FF-N-105.

C. Power-Driven Fasteners: CABO NER-272.

D. Wood Screws: ASME B18.6.1.

E. Lag Bolts: ASME B18.2.1.

Reviewed for Code Compliance
Inspections Division
Approved with Conditions
Date: 10/31/17

F. Bolts: Steel bolts complying with ASTM A 307, Grade A; with ASTM A 563 hex nuts a where indicated, flat washers.

2.14 METAL FRAMING ANCHORS

A. General: Provide galvanized steel framing anchors of structural capacity, type, and size indicated and as follows:

1. Research or Evaluation Reports: Provide products for which model code research or evaluation reports exist that are acceptable to authorities having jurisdiction and that evidence compliance of metal framing anchors for application indicated with building code in effect for Project.
2. Allowable Design Loads: Provide products with allowable design loads, as published by manufacturer, that meet or exceed those indicated. Manufacturer's published values shall be determined from empirical data or by rational engineering analysis, and demonstrated by comprehensive testing performed by a qualified independent testing agency.

B. Galvanized Steel Sheet: Hot-dip, zinc-coated steel sheet complying with ASTM A 653, G60 coating designation; structural, commercial, or lock-forming quality, as standard with manufacturer for type of anchor indicated.

C. Joist Hangers: U-shaped joist hangers with 2-inch-long seat and 1-1/4-inch-wide nailing flanges at least 85 percent of joist depth.

D. Top Flange Hangers: U-shaped joist hangers, full depth of joist, formed from metal strap with tabs bent to extend over and be fastened to supporting member.

1. Designed for connection of engineered wood products, sized to support design loads.

E. Bridging: Rigid, V-section, nailless type, 0.064 inch thick, length to suit joist size and spacing.

F. Post Bases: Adjustable-socket type for bolting in place with standoff plate to raise post 1 inch above base and with 2-inch minimum side cover, socket 0.064 inch thick, standoff and adjustment plates 0.108 inch thick.

G. Joist Ties: Flat straps, with holes for fasteners, for tying joists together over supports.

1. Length: As indicated.

H. Rafter Tie-Downs (Hurricane Ties): Bent strap tie for fastening rafters or roof trusses to wall studs below, 1-5/8 inches wide by 0.052 inch thick.

I. Floor-to-Floor Ties: Flat straps, with holes for fasteners, for tying upper floor wall studs to band joists and lower floor studs, 1-1/4 inches wide by 0.052 inch thick by 36 inches long.

J. Hold-Downs: Brackets for bolting to wall studs and securing to foundation walls with anchor bolts or to other hold-downs with threaded rods and designed with first of 2 bolts placed 7 bolt diameters from reinforced base.

1. Wall Bracing: T-shaped bracing made for letting into studs in saw kerf, 1-1/8 inches wide by 9/16 inch deep by 0.034 inch thick with hemmed edges.

K. Wall Bracing: Angle bracing made for letting into studs in saw kerf, 15/16 by 15/16 by 0.040 inch thick with hemmed edges.

2.15 MISCELLANEOUS MATERIALS

A. Sill-Sealer Gaskets: Glass-fiber-resilient insulation, fabricated in strip form, for use as a sill sealer; 1-inch nominal thickness, compressible to 1/32 inch; selected from manufacturer's standard widths to suit width of sill members indicated.

B. Adhesives for Field Gluing Panels to Framing: Formulation complying with APA AFG-01 that is approved for use with type of construction panel indicated by both adhesive and panel manufacturers.

C. Water-Repellent Preservative: NWWDA-tested and -accepted formulation containing 3-iodo-2-propynyl butyl carbonate (IPBC) as its active ingredient.

Reviewed for Code Compliance
Inspections Division
Approved with Conditions
Date: 10/31/17

PART 3 EXECUTION

3.01 INSTALLATION, GENERAL

A. Discard units of material with defects that impair quality of rough carpentry and that are too small to use with minimum number of joints or optimum joint arrangement.

B. Set rough carpentry to required levels and lines, with members plumb, true to line, cut, and fitted.

C. Fit rough carpentry to other construction; scribe and cope as required for accurate fit. Correlate location of furring, nailers, blocking, grounds, and similar supports to allow attachment of other construction.

D. Apply field treatment complying with AWPA M4 to cut surfaces of preservative-treated lumber and plywood.

E. Securely attach rough carpentry work to substrate by anchoring and fastening as indicated, complying with the following:

1. Published requirements of metal framing anchor manufacturer.
2. "Recommended Nailing Schedule" of referenced framing standard and with AFPA's "National Design Specifications for Wood Construction."
3. "Table 2304.9.1 - Fastening Schedule" of the International Building Code.

F. Use common wire nails, unless otherwise indicated. Use finishing nails for finish work. Select fasteners of size that will not fully penetrate members where opposite side will be exposed to view or will receive finish materials. Make tight connections between members. Install fasteners without splitting wood; predrill as required.

G. Use hot-dip galvanized or stainless-steel nails where rough carpentry is exposed to weather, in ground contact, or in area of high relative humidity.

H. Countersink nail heads on exposed carpentry work and fill holes with wood filler.

3.02 WOOD GROUNDS, NAILERS, BLOCKING, AND SLEEPERS

A. Install wood grounds, nailers, blocking, and sleepers where shown and where required for screeding or attaching other work. Form to shapes shown and cut as required for true line and level of attached work. Coordinate locations with other work involved.

B. Attach to substrates to support applied loading. Recess bolts and nuts flush with surfaces, unless otherwise indicated. Build into masonry during installation of masonry work. Where possible, anchor to formwork before concrete placement.

C. Install permanent grounds of dressed, preservative-treated, key-beveled lumber not less than 1-1/2 inches wide and of thickness required to bring face of ground to exact thickness of finish material. Remove temporary grounds when no longer required.

3.03 WOOD FURRING

A. Install plumb and level with closure strips at edges and openings. Shim with wood as required for tolerance of finish work.

1. Firestop furred spaces of walls at each floor level and at ceiling with wood blocking or noncombustible materials, accurately fitted to close furred spaces.

B. Furring to Receive Plywood Paneling: Install 1-by-3-inch nominal-size furring at 24 inches o.c., horizontally and vertically. Select furring with no knots capable of producing bent-over nails and damage to paneling.

C. Furring to Receive Gypsum Board: Install 1-by-2-inch nominal-size furring at 16 inches o.c., vertically.

3.04 WOOD FRAMING, GENERAL

A. Framing Standard: Comply with AFPA's "Manual for Wood Frame Construction," unless otherwise indicated.

B. Framing with Engineered Wood Products: Install engineered wood products to comply with manufacturer's written instructions.

Reviewed for Code Compliance
Inspections Division
Approved with Conditions
Date: 10/31/17

C. Install framing members of size and at spacing indicated.

D. Do not splice structural members between supports.

E. Firestop concealed spaces of wood-framed walls and partitions at each floor level and at ceiling line of top story. Where firestopping is not inherent in framing system used, provide closely fitted wood blocks of 2-inch nominal-thickness lumber of same width as framing members.

F. Comply with Table 2304.9.1 and Section 2304 of the International Building Code for minimum fastening requirements of wood members, and published requirements of metal fastener manufacturer, whichever is more stringent.

3.05 WALL AND PARTITION FRAMING

A. General: Arrange studs so that wide face of stud is perpendicular to direction of wall or partition and narrow face is parallel. Provide single bottom plate and double top plates using members of 2-inch nominal thickness whose widths equal that of studs; except single top plate may be used for non-load-bearing partitions. Nail or anchor plates to supporting construction, unless otherwise indicated.

B. Construct corners and intersections with 3 or more studs. Provide miscellaneous blocking and framing as shown and as required to support facing materials, fixtures, specialty items, and trim.

1. Provide continuous horizontal blocking at midheight of single-story partitions and multistory partitions, using members of 2-inch nominal thickness and of same width as wall or partitions.

C. Frame openings with multiple studs and headers. Provide nailed header members of thickness equal to width of studs. Set headers on edge and support on jamb studs.

1. For non-load-bearing partitions, provide double-jamb studs with headers not less than 4-inch nominal depth for openings 36 inches and less in width, and not less than 6-inch nominal depth for wider openings.

2. For load-bearing walls, provide double-jamb studs for openings 72 inches and less in width, and triple-jamb studs for wider openings. Provide headers of depth shown or, if not shown, as recommended by AFPA's "Manual for Wood Frame Construction."

D. Provide bracing in exterior walls, at both walls of each external corner, full-story height, unless otherwise indicated. Provide one of the following:

E. Provide bracing in walls, at locations indicated, full-story height, unless otherwise indicated. Provide one of the following:

1. Diagonal bracing at 45-degree angle using let-in 1-by-4-inch nominal-size boards or using metal bracing.

2. Plywood panels, not less than 48 by 96 inches applied vertically.

3. Performance-rated structural-use panels, not less than 48 by 96 inches applied vertically.

4. Particleboard sheathing panels, not less than 48 by 96 inches applied vertically.

5. In lieu of bracing at corners or at locations indicated, continuous gypsum sheathing may be provided in panels not less than 48 by 96 inches applied vertically.

6. In lieu of bracing at corners or at locations indicated, continuous fiberboard sheathing, intermediate type, may be provided in panels not less than 48 by 96 inches applied vertically.

3.06 FLOOR JOIST FRAMING

A. General: Install floor joists with crown edge up and support ends of each member with not less than 1-1/2 inches of bearing on wood or metal, or 3 inches on masonry. Attach floor joists as follows:

1. Where supported on wood members, by toe nailing or by using metal framing anchors.

2. Where framed into wood supporting members, by using wood ledgers as shown or, if not shown, by using metal joist hangers.

Reviewed for Code Compliance
Inspections Division
Approved with Conditions
Date: 10/31/17

B. Fire Cuts: At joists built into masonry, bevel cut ends 3 inches and do not embed more tha inches.

C. Frame openings with headers and trimmers supported by metal joist hangers; double headers and trimmers where span of header exceeds 48 inches.

D. Do not notch in middle third of joists; limit notches to 1/6 depth of joist, 1/3 at ends. Do not bore holes larger than 1/3 depth of joist; do not locate closer than 2 inches from top or bottom.

E. Provide solid blocking of 2-inch nominal thickness by depth of joist at ends of joists unless nailed to header or band.

F. Lap members framing from opposite sides of beams, girders, or partitions not less than 4 inches or securely tie opposing members together. Provide solid blocking of 2-inch nominal thickness by depth of joist over supports.

G. Anchor members paralleling masonry with 1/4-by-1-1/4-inch metal strap anchors spaced not more than 96 inches o.c. extending over and fastening to 3 joists. Embed anchors at least 4 inches into masonry with ends bent at right angles 4 inches into grouted masonry.

H. Under jamb studs at openings, provide solid blocking between joist.

I. Under non-load-bearing partitions, provide double joists separated by solid blocking equal to depth of studs above.

1. Provide triple joists separated as above, under partitions receiving ceramic tile and similar heavy finishes or fixtures.

J. Provide bridging of type indicated below, at intervals of 96 inches o.c., between joists.

1. Diagonal wood bridging formed from bevel cut 1-by-3-inch nominal-size lumber, double-crossed and nailed both ends to joists.
2. Steel bridging installed to comply with bridging manufacturer's written instructions.
3. Bridging may be omitted where joist depth is 12-inch nominal size or less, and where indicated live load is 40 psf or less.

K. Prefabricated Wood I-Joists:

1. Comply with manufacturer’s written instructions for design, installation, and fastening.
2. Design Loads: Joists shall be sized to support loads indicated on drawings and reviewed by a Registered Engineer in the employ of the joist manufacturer.
3. Allowable deflection:
   a. Floor Joists: L/600 live load deflection; L/240 total load deflection.
4. Permanently bond the subfloor to the joists using waterproof construction adhesive and screws.
5. End Bearing: 1-3/4” minimum bearing with Timberstrand LSL rim joist.
6. Intermediate bearing: 3-1/2” minimum bearing. Blocking panels shall be installed between the joists when load bearing walls are located above the bearing point.

L. Engineered Wood Beams

1. Comply with manufacturer’s written instructions for design, installation, and fastening.
2. Design Loads: Beams shall be sized to support loads indicated on drawings.
3. Allowable deflection:
   a. Floor Beams: L360 live load deflection; L240 total load deflection.
   b. Roof Beams: L/240 total load deflection.
4. Protect wood members from direct contact with concrete or masonry.
5. Refer to manufacturers literature for connection of multiple plies of side loaded beams.

3.07 RAFTER AND CEILING JOIST FRAMING

A. Ceiling Joists: Install ceiling joists with crown edge up and complying with requirements specified above for floor joists. Face nail to ends of parallel rafters.

Reviewed for Code Compliance
Inspections Division
Approved with Conditions
Date: 10/31/17

1. Where ceiling joists are at right angles to rafters, provide additional short joi perpendicular to rafters from wall plate to first joist; nail to ends of rafters and to top plate and nail to first joist or anchor with framing anchors or metal straps. Provide 1-by-8-inch nominal-size or 2-by-4-inch nominal-size stringers spaced 48 inches o.c. crosswise over main ceiling joists.

B. Rafters: Notch to fit exterior wall plates and toe nail or use metal framing anchors. Double rafters to form headers and trimmers at openings in roof framing, if any, and support with metal hangers. Where rafters abut at ridge, place directly opposite each other and nail to ridge member or use metal ridge hangers.

1. At valleys, provide double-valley rafters of size shown or, if not shown, of same thickness as regular rafters and 2 inches deeper. Bevel ends of jack rafters for full bearing against valley rafters.
2. At hips, provide hip rafter of size shown or, if not shown, of same thickness as regular rafters and 2 inches deeper. Bevel ends of jack rafters for full bearing against hip rafter.

C. Provide collar beams (ties) as shown or, if not shown, provide 1-by-6-inch nominal-size boards between every third pair of rafters, but not more than 48 inches o.c. Locate below ridge member, at third point of rafter span. Cut ends to fit roof slope and nail to rafters.

D. Provide special framing as shown for eaves, overhangs, dormers, and similar conditions, if any.

E. Prefabricated Wood I-Joists:

1. Comply with manufacturer's written instructions for design, installation, and fastening.
2. Design Loads: Joists shall be sized to support loads indicated on drawings and reviewed by a Registered Engineer in the employ of the joist manufacturer.
3. Allowable deflection:
   a. Roof Joists: L/360 live load deflection; L/240 total load deflection
4. Permanently bond the subfloor to the joists using waterproof construction adhesive and nails.
5. End Bearing: 1-3/4" minimum bearing with Timberstrand LSL rim joist.
6. Intermediate bearing: 3-1/2" minimum bearing. Blocking panels shall be installed between the joists when load bearing walls are located above the bearing point.

F. Engineered Wood Beams

1. Comply with manufacturer's written instructions for design, installation, and fastening.
2. Design Loads: Beams shall be sized to support loads indicated on drawings.
3. Allowable deflection:
   a. Floor Beams: L360 live load deflection; L240 total load deflection.
   b. Roof Beams: L/240 total load deflection.
4. Protect wood members from direct contact with concrete or masonry.
5. Refer to manufacturers literature for connection of multiple plies of side loaded beams.

3.08 STAIR FRAMING

A. Provide stair framing members of size, space, and configuration indicated or, if not otherwise indicated, to comply with the following requirements:

1. Stringer Size: 2-by-12-inch nominal-size minimum.
2. Notching: Notch stringers to receive treads, risers, and supports; leave at least 3-1/2 inches of effective depth.
3. Stringer Spacing: At least 3 stringers for each 36-inch clear width of stair.

B. Provide stair framing that does not exceed the following variations between treads and risers within each flight:

1. Adjacent Treads and Risers: 3/16 inch.

Reviewed for Code Compliance
Inspections Division
Approved with Conditions
Date: 10/31/17

2. Between Largest and Smallest Treads and Risers: 3/8 inch.

3.09 INSTALLATION OF STRUCTURAL-USE PANELS

A. General: Comply with applicable recommendations contained in APA Form No. E30, "APA Design/Construction Guide: Residential & Commercial," for types of structural-use panels and applications indicated.
   1. Comply with "Code Plus" provisions of above-referenced guide.

B. Fastening Methods: Fasten panels as indicated below:
   1. Combination Subflooring-Underlayment: Glue and nail to framing throughout.
   2. Subflooring: Glue and nail to framing throughout.
      a. Space panels 1/8 inch at edges and ends.
   3. Sheathing: Nail to framing.
      a. Space panels 1/8 inch at edges and ends.
   4. Underlayment: Nail to subflooring.
      a. Space panels 1/32 inch at edges and ends.
      b. Fill and sand edge joints of underlayment receiving resilient flooring just before installing flooring.
   5. Plywood Backing Panels: Nail or screw to supports.
   6. Lay-out panels with face grain oriented perpendicular to the supporting members.
   7. Install roof sheathing with panel cups at all edges.

3.10 GYPSUM SHEATHING

A. General: Install gypsum sheathing to comply with manufacturer's instructions, GA-253, and the following:
   1. Cut boards at penetrations, edge, and other obstructions of the work. Fit tightly against abutting construction, except provide a 3/8" setback where non-load-bearing construction abuts structural elements.
   2. Coordinate sheathing installation with flashing and joint sealant installation so that these combined materials are installed in the sequence and manner that prevents exterior moisture from passing through completed exterior wall assembly.
   3. Apply fasteners so that screw heads bear tightly against face of gypsum sheathing boards, but do not cut into face paper.
   4. Do not bridge building expansion joints with gypsum sheathing. Cut and space edges to match spacing of structural support elements.

B. Vertical Installation: Install four-foot-wide gypsum sheathing boards vertically with vertical edges centered over flanges of studs. Abut ends and edges of each board with those of adjoining boards. Screw-attach boards at perimeter and within field of board to each steel stud a follows:
   1. Fasteners spaced approximately 8" o.c. and set-back 3/8" minimum from edges and ends of boards.

END OF SECTION

Reviewed for Code Compliance
Inspections Division
Approved with Conditions
Date: 10/31/17

SECTION 06175

SHOP-FABRICATED WOOD TRUSSES

PART 1 GENERAL

1.01 SUMMARY

A. Section Includes:

1. Parallel-Chord Roof Trusses, Bottom-Chord Bearing
2. Truss Accessories

B. Related Sections:

1. Section 05 50 00 (05500) - Metal Fabrications
2. Section 06 10 00 (06100) - Rough Carpentry permanent bracing

1.02 REFERENCES

A. ASTM International Publications:

1. A153 "Standard Specification for Zinc Coating (Hot-Dip) on Iron and Steel Hardware"
2. A307 "Standard Specification for Carbon Steel Bolts and Studs, 60 000 PSI Tensile Strength"
3. A563 "Standard Specification for Carbon and Alloy Steel Nuts"
4. A591 "Standard Specification for Steel Sheet, Electrolytic Zinc-Coated, for Light Coating Weight [Mass] Applications"
5. A653 "Standard Specification for Steel Sheet, Zinc-Coated (Galvanized) or Zinc-Iron Alloy-Coated (Galvannealed) by the Hot-Dip Process"
6. A666 "Standard Specification for Annealed or Cold-Worked Austenitic Stainless Steel Sheet, Strip, Plate, and Flat Bar"
7. A780 "Standard Practice for Repair of Damaged and Uncoated Areas of Hot-Dip Galvanized Coatings"
8. A792 "Standard Specification for Steel Sheet, 55 % Aluminum-Zinc Alloy-Coated by the Hot-Dip Process"
9. F1667 "Standard Specification for Driven Fasteners: Nails, Spikes, and Staples"

B. The American Society of Mechanical Engineers (ASME) Publications:

1. B18.2.1 "Square and Hex Bolts and Screws, Inch Series"

C. Truss Plate Institute (TPI) / American National Standards Institute (ANSI) Publications:

1. ANSI/TP1 1, "National Design Standard for Metal-Plate-Connected Wood Truss Construction."
2. TPI HIB "Commentary and Recommendations for Handling Installing & Bracing Metal Plate Connected Wood Trusses."
3. TPI DSB "Recommended Design Specification for Temporary Bracing of Metal Plate Connected Wood Trusses."

1.03 DEFINITIONS

A. Metal-plate-connected wood trusses include planar structural units consisting of metal-plate-connected members fabricated from dimension lumber and cut and assembled before delivery to Project site.

Reviewed for Code Compliance
Inspections Division
Approved with Conditions
Date: 10/31/17

1.04 PERFORMANCE REQUIREMENTS

A. Structural Performance: Engineer, fabricate, and erect metal-plate-connected wood trusses to withstand design loads within limits and under conditions required.

1. Design Loads: As indicated on structural drawings.

2. Design trusses to withstand design loads without deflections greater than the following:

a. Roof Trusses: Vertical deflection of 1/240 of span due to total load.

b. Roof Trusses: Horizontal deflection at reactions of 1-1/4 inches due to total load.

B. Engineering Responsibility: Engage a fabricator who uses a qualified professional engineer to prepare calculations, Shop Drawings, and other structural data for metal-plate-connected wood trusses.

1.05 SUBMITTALS

A. General: Submit the following in accordance with Conditions of Contract and Division 01 Specification Sections.

B. Product Data: For lumber, metal-plate connectors, metal framing connectors, bolts, and fasteners.

1. Submit “Letter of Conformance” in accordance with Section 01 33 00 (01330) indicating specified items selected for use in project.

C. Shop Drawings detailing location, pitch, span, camber, configuration, and spacing for each type of truss required; species, sizes, and stress grades of lumber to be used; splice details; type, size, material, finish, design values, and orientation and location of metal connector plates; and bearing details.

1. To the extent truss design considerations are indicated as fabricator's responsibility, include structural analysis data signed and sealed by the qualified professional engineer responsible for their preparation.

2. Include truss Shop Drawings signed and sealed by the qualified professional engineer responsible for their preparation.

D. Product certificates signed by officer of truss fabricating firm certifying that metal-plate-connected wood trusses supplied for Project comply with specified requirements and Shop Drawings.

E. Material certificates for dimension lumber specified to comply with minimum allowable unit stresses. Indicate species and grade selected for each use and design values approved by the American Lumber Standards Committee (ALSC) Board of Review.

F. Research or evaluation reports of the model code organization acceptable to authorities having jurisdiction that evidence the following products' compliance with building code in effect for Project.

1. Metal-plate connectors

2. Metal framing connectors

1.06 QUALITY ASSURANCE

A. Installer Qualifications: An experienced installer with a minimum of five years of experience, who has completed wood truss projects similar in material, design, and extent to that indicated for this Project and with a record of successful in-service performance.

B. Fabricator's Qualifications: Engage a firm that complies with the following requirements for quality control and is experienced in fabricating metal-plate-connected wood trusses similar to those indicated for this Project and with a record of successful in-service performance:

Reviewed for Code Compliance
Inspections Division
Approved with Conditions
Date: 10/31/17

1. Fabricator participates in a recognized quality-assurance program that involves inspection SPIB; Timber Products Inspection, Inc.; Truss Plate Institute (TPI); or other independ inspecting and testing agency acceptable to Architect and authorities having jurisdiction.

C. Comply with applicable requirements and recommendations of the following Truss Plate Institute (TPI) / American National Standards Institute (ANSI) publications:

1. ANSI/TP1 1, "National Design Standard for Metal-Plate-Connected Wood Truss Construction."
2. TPI HIB "Commentary and Recommendations for Handling Installing & Bracing Metal Plate Connected Wood Trusses."
3. TPI DSB "Recommended Design Specification for Temporary Bracing of Metal Plate Connected Wood Trusses."

D. Metal-Plate Connector Manufacturer's Qualifications: A manufacturer that is a member of TPI and that complies with TPI quality-control procedures for manufacture of connector plates published in ANSI/TP1 1.

E. Single-Source Responsibility for Connector Plates: Provide metal connector plates from one source and by a single manufacturer.

F. Single-Source Engineering Responsibility: Provide trusses engineered by metal-plate connector manufacturer to support superimposed dead and live loads indicated, with design approved and certified by a qualified professional engineer.

G. Professional Engineer Qualifications: A professional engineer who is legally authorized to practice in the jurisdiction where Project is located and who is experienced in providing engineering services of the kind indicated that have resulted in installing metal-plate-connected wood trusses similar to those indicated for this Project and with a record of successful in-service performance.

1.07 DELIVERY, STORAGE, AND HANDLING

A. Handle and store trusses with care and comply with manufacturer's written instructions and TPI recommendations to avoid damage and lateral bending.

B. Inspect trusses showing discoloration, corrosion, or other evidence of deterioration. Discard and replace trusses that are damaged or defective.

1.08 SEQUENCING AND SCHEDULING

A. Time delivery and erection of trusses to avoid extended on-site storage and to avoid delaying progress of other trades whose work must follow erection of trusses.

PART 2 PRODUCTS

2.01 MANUFACTURERS

1. Metal Connector Plates:
   a. Alpine Engineered Products, Inc. (800-735-8055)
   b. Mitek Industries, Inc. (800-325-8075)
   c. Truswal Systems Corporation (800-521-9790)
   d. USP Lumber Connectors (800-328-5934)
   e. Approved substitution
2. Metal Framing Anchors:
   a. Hilti, Inc. (800-879-8000)
   b. Mitek Industries, Inc. (800-325-8075)
   c. Truswal Systems Corporation (800-521-9790)

Reviewed for Code Compliance
Inspections Division
Approved with Conditions
Date: 10/31/17

d. USP Lumber Connectors (800-328-5934)

e. Simpson Strong-Tie Company, Inc. (800-999-5099)

f. Approved substitution

2.02 DIMENSION LUMBER

A. Lumber Standards: Comply with DOC PS 20, "American Softwood Lumber Standard," and with applicable grading rules of inspection agencies certified by ALSC's Board of Review.

B. Lumber Standards: Comply with DOC PS 20, "American Softwood Lumber Standard," and with applicable grading rules of inspection agencies certified by ALSC's Board of Review.

1. NELMA - Northeastern Lumber Manufacturers Association

2. NLGA - National Lumber Grades Authority (Canadian)

3. SPIB - Southern Pine Inspection Bureau

4. WCLIB - West Coast Lumber Inspection Bureau

5. WWPA - Western Wood Products Association

C. Grade Stamps: Provide lumber with each piece factory marked with grade stamp of inspection agency evidencing compliance with grading rule requirements and identifying grading agency, grade, species, moisture content at time of surfacing, and mill.

D. Provide dressed lumber, S4S, manufactured to actual sizes required by DOC PS 20 for moisture content specified, to comply with requirements indicated below:

1. Provide dry lumber with 19 percent maximum moisture content at time of dressing.

E. Grade and Species: Provide dimension lumber of any species for truss chord and web members, graded visually or mechanically, and capable of supporting required loads without exceeding allowable design values according to AFPA's "National Design Specification for Wood Construction" and its "Supplement."

2.03 METAL CONNECTOR PLATES

A. General: Fabricate connector plates from metal complying with requirements indicated below.

B. Interior locations:

1. Hot-Dip Galvanized Steel Sheet: Structural-quality steel sheet, zinc coated by hot-dip process complying with ASTM A653, Structural Steel, (SS), high strength low alloy steel, Type A, G60 coating designation; Grade 33 and not less than 0.0359 inch thick.

2. Electrolytic Zinc-Coated Steel Sheet: ASTM A591, structural-(physical) quality steel sheet, zinc coated by electrodeposition; 33,000-psi minimum yield strength, coating class C, and not less than 0.0474 inch thick.

2.04 FASTENERS

A. General: Provide fasteners of size and type indicated that comply with requirements specified below for material and manufacture.

B. Nails, Wire, Brads, and Staples: ASTM F1667.

C. Power-Driven Fasteners: ICC NER-272.

D. Wood Screws: ASME B18.2.1.

E. Lag Bolts and Screws: ASME B18.2.1.

F. Bolts: Steel bolts complying with ASTM A307, Grade A; with ASTM A563 hex nuts and, where indicated, flat washers.

Reviewed for Code Compliance
Inspections Division
Approved with Conditions
Date: 10/31/17

G. Truss Tie-Downs: Bent strap tie for fastening roof trusses to wall studs below, 1-1/2 inches wide 0.050 inch thick. Tie fastens to one side of truss, top plates, and side of stud below.

H. Truss Tie-Downs (Hurricane or Seismic Ties): Bent strap tie for fastening roof trusses to wall studs below, 2-1/4 inches wide by 0.062 inch thick. Tie fits over top of truss and fastens to both sides of truss, top plates, and one side of stud below.

I. Roof Truss Clips: Angle clips for bracing bottom chord of roof trusses at non-load-bearing walls, 1-1/4 inches wide by 0.050 inch thick. Clip is fastened to truss through slotted holes to allow for truss deflection.

2.05 METAL FRAMING ANCHORS

A. General: Provide metal framing anchors of structural capacity, type, size, metal, and finish indicated that comply with requirements specified, including the following:

1. Research or Evaluation Reports: Provide products for which model code research or evaluation reports exist that are acceptable to authorities having jurisdiction and that evidence compliance of metal framing anchors for application indicated with building code in effect for this Project.

2. Allowable Design Loads: Provide products with allowable design loads, as published by manufacturer, that meet or exceed those indicated. Manufacturer's published values shall be determined from empirical data or by rational engineering analysis, and demonstrated by comprehensive testing performed by a qualified independent testing agency.

B. Galvanized Steel Sheet: Hot-dip, zinc-coated steel sheet complying with ASTM A653, G60 coating designation; structural, commercial, or lock-forming quality, as standard with manufacturer for type of anchor indicated.

C. Stainless-Steel Sheet: ASTM A666, Type 304 or 316, chromium nickel steel sheet; 33,000-psi minimum yield strength.

2.06 MISCELLANEOUS MATERIALS

A. Galvanizing Repair Paint: SSPC-Paint 20 or DOD-P-21035, with dry film containing a minimum of 94 percent zinc dust by weight.

2.07 FABRICATION

A. Cut truss members to accurate lengths, angles, and sizes to produce close-fitting joints.

B. Fabricate metal connector plates to size, configuration, thickness, and anchorage details required to withstand design loadings for types of joint designs indicated.

C. Assemble truss members in design configuration indicated using jigs or other means to ensure uniformity and accuracy of assembly with joints closely fitted to comply with tolerances of ANSI/TP1 1. Position members to produce design camber indicated.

1. Fabricate wood trusses within manufacturing tolerances of ANSI/TP1 1.

D. Connect truss members by metal connector plates located and securely embedded simultaneously into both sides of wood members by air or hydraulic press.

PART 3 EXECUTION

3.01 INSTALLATION

A. Do not install wood trusses until supporting construction is in place and is braced and secured.

B. Hoist trusses in place by lifting equipment suited to sizes and types of trusses required, exercising care not to damage truss members or joints by out-of-plane bending or other causes.

C. Install and brace trusses according to recommendations of TPI and as indicated.

Reviewed for Code Compliance
Inspections Division
Approved with Conditions
Date: 10/31/17

D. Install trusses plumb, square, and true to line and securely fasten to supporting construction.

E. Space, adjust, and align trusses in location before permanently fastening and as indicated on drawings.

F. Anchor trusses securely at all bearing points using metal framing anchors. Install fasteners through each fastener hole in metal framing anchor according to manufacturer's fastening schedules and written instructions.

   1. Anchor trusses to girder trusses as indicated.

G. Install and fasten permanent bracing during truss erection and before construction loads are applied. Anchor ends of permanent bracing where terminating at walls or beams.

   1. Install and fasten strongback bracing vertically against vertical web of parallel-chord trusses at centers indicated on Drawings.

H. Install wood trusses within installation tolerances of ANSI/TP1 1.

I. Do not cut or remove truss members.

J. Return wood trusses that are damaged or do not meet requirements to fabricator and replace with trusses that do meet requirements.

   1. Do not alter trusses in the field.

END OF SECTION

Reviewed for Code Compliance
Inspections Division
Approved with Conditions
Date: 10/31/17

SECTION 06200

FINISH CARPENTRY

PART 1 GENERAL

1.01 SUMMARY

A. Section Includes:

1. Wood Millwork
   a. Interior Standing and Running Trim
   b. Exterior Standing and Running Trim
2. Wood Shelving

B. Related Sections:

1. Section 06 10 00 (06100) - Rough Carpentry
2. Section 07 46 46 (07460) – Fiber-Cement Siding
3. Section 09 21 16 (09255) - Gypsum Board Assemblies
4. Section 09 90 00 (09900) - Painting
5. Section 12 30 00 (06400) - Architectural Woodwork
6. Division 1 Section 01811 - Requirements”.

1.02 REFERENCES

A. DOC PS 1 "Construction and Industrial Plywood"

B. DOC PS 20 "American Softwood Lumber Standard"

C. ANSI/AF&PA NDS-2005: "National Design Specification (NDS) for Wood Construction".

D. ANSI/HPVA HP-1: "American National Standard for Hardwood and Decorative Plywood"

E. AWI Quality Standards

1.03 SUBMITTALS

A. Submit “Letter of Conformance” in accordance with Section 01 33 00 (01330) with the following supporting data:

1. Submit Product Data and Shop Drawings indicating component profiles and fastening and joining details.
2. Samples for initial selection of the following in the form of manufacturer's color charts consisting of actual units or sections of units showing the full range of colors, textures, and patterns available for each type of material indicated.
3. Samples for verification of the following:
   a. Lumber products with factory-applied finish, 50 sq. in. for lumber for each finish system and color.

Reviewed for Code Compliance
Inspections Division
Approved with Conditions
Date: 10/31/17

1.04 QUALITY ASSURANCE

A. Factory-mark each piece of lumber and plywood with type, grade, mill, and grading agency identification; except omit marking from surfaces to receive transparent finish, and submit mill certificate that material has been inspected and graded in accordance with requirements if it cannot be marked on a concealed surface.

B. Perform finish carpentry work in accordance with AWI Quality Standards, Custom Grade.

C. Lumber Siding Installer Qualifications: Engage an experienced Installer who has completed siding similar in material, design, and extent to that indicated for this Project and with a record of successful in-service performance.

1.05 DELIVERY, STORAGE, AND HANDLING

A. Protect finish carpentry materials during transit, delivery, storage, and handling to prevent damage, soiling, and deterioration.

B. Do not deliver finish carpentry materials, until painting, wet work, grinding, and similar operations which could damage, soil, or deteriorate woodwork have been completed in installation areas. If, due to unforeseen circumstances, finish carpentry materials must be stored in other than installation areas, store only in areas meeting requirements specified for installation areas.

1.06 PROJECT CONDITIONS

A. Conditioning: Installer shall advise Contractor of temperature and humidity requirements for finish carpentry installation areas.

B. Environmental Limitations: Do not deliver or install interior finish carpentry until building is enclosed and weatherproof, wet-work in space is completed and nominally dry, and HVAC system is operating and will maintain temperature and relative humidity at occupancy levels throughout the remainder of construction period.

1. Maintain temperature and humidity in installation area as required to maintain moisture content of installed finish carpentry within a 1.0 percent tolerance of optimum moisture content, from date of installation through remainder of construction period. The fabricator of woodwork shall determine optimum moisture content and required temperature and humidity.

C. Weather Limitations: Proceed with installing exterior finish carpentry only when existing and forecasted weather conditions will permit work to be performed according to manufacturer's recommendations and warranty requirements and at least one coat of specified finish to be applied without exposure to rain, snow, or dampness.

PART 2 PRODUCTS

2.01 MATERIALS, GENERAL

A. Lumber standards: Comply with DOC PS 20, "American Softwood Lumber Standard," for lumber and with applicable grading rules of inspection agencies certified by American Lumber Standards Committee Board of Review.

B. Inspection Agencies: Inspection agencies, and the abbreviations used to reference them, include the following:

1. NeLMA - Northeastern Lumber Manufacturers Association
2. NLGA - National Lumber Grades Authority
3. WCLIB - West Coast Lumber Inspection Bureau
4. WWPA - Western Wood Products Association

Reviewed for Code Compliance
Inspections Division
Approved with Conditions
Date: 10/31/17

C. Grade Stamps: Provide lumber with each piece factory marked with grade stamp of inspection agel evidencing compliance with grading rule requirements and identifying grading agency, grade, spec moisture content at time of surfacing, and mill.

1. For exposed lumber, furnish pieces with grade stamps applied to ends or back of each piece, or omit grade stamps entirely and provide certificates of grade compliance issued by inspection agency.

D. Softwood Plywood: Comply with DOC PS 1, "U.S. Product Standard for Construction and Industrial Plywood."

E. Hardwood Plywood: Comply with ANSI/HPVA HP-1, "Interim Voluntary Standard for Hardwood and Decorative Plywood."

2.02 INTERIOR STANDING AND RUNNING TRIM

A. Hardwood Lumber: PS 58; Premium Grade in accordance with AWI; maximum moisture content of 15 percent.

1. Stained Interior Wood Trim and Millwork: Species as shown below, solid lumber stock, sizes and shapes shown on Interior Design Drawings, of grain type sufficient to receive stained finish, smooth surfaced.

2. Painted Interior Wood Trim and Millwork: Species as shown below, solid lumber stock, sizes and shapes shown on Drawings, of grain type sufficient to receive painted finish, smooth surfaced.

See finish Interior Design Drawings for species

B. Nominal sizes are indicated, except as shown by detailed dimensions. Provide dressed or worked and dressed lumber, as applicable, manufactured to the actual sizes as required by PS 20 or to actual sizes and patterns as shown, unless otherwise indicated.

2.03 FINISH CARPENTRY FABRICATION

A. Wood Moisture Content: Comply with requirements of specified inspection agencies and manufacturer's recommendations for moisture content of finish carpentry on relative humidity conditions existing during time of fabrication and in installation areas.

B. Fabricate finish carpentry to dimensions, profiles, and details indicated.

1. Back out or kerf backs of the following members, except members with ends exposed in finished work:

a. Interior standing and running trim, except shoe mold and crown mold.

2. Ease edges of lumber less than 1 inch in nominal thickness to 1-1/6 inch radius.

PART 3 EXECUTION

3.01 EXAMINATION

A. Examine substrates, with Installer present, for compliance with requirements for installation tolerance and other conditions affecting installation and performance of finish carpentry. Do not proceed with installation until unsatisfactory conditions have been corrected.

3.02 PREPARATION

A. Clean substrates of projections and substances detrimental to application.

B. Condition finish carpentry to average prevailing humidity conditions in installation areas before installation, for a minimum of 24 hours unless longer conditioning is recommended by manufacturer.

Reviewed for Code Compliance
Inspections Division
Approved with Conditions
Date: 10/31/17

C. Prime and backprime lumber for painted finish exposed on the exterior not indicated as fact prefinished. Comply with requirements for surface preparation and application in Division 09 Section "Painting."

3.03 INSTALLATION - GENERAL

A. Discard units of material which are unsound, warped, bowed, twisted improperly treated, not adequately seasoned or too small to fabricate work with minimum of joints or optimum jointing arrangements. Do not use manufactured units with defective surfaces, sizes, or patterns.

B. Install the work plumb, level, true, and straight with no distortions. Shim as required using concealed shims. Install to a tolerance of 1/8" in 8'-0" for plumb and level countertops; and with 1/16" maximum offset in flush adjoining 1/8" maximum offsets in revealed adjoining surfaces.

C. Scribe and cut work to fit adjoining work, and refinish cut surfaces or repair damaged finish at cuts.

D. Countersink nails, fill surface flush, and sand where face nailing is unavoidable.

E. Install to tolerance of 1/8 inch in 96 inches for plumb and level. Install adjoining finish carpentry with 1/32 inch maximum offset for flush installation and 1/16 inch maximum offset for reveal installation.

F. Coordinate finish carpentry with materials and systems in or adjacent to standing and running trim and rails. Provide cutouts for mechanical and electrical items that penetrate exposed surfaces of trim and rails.

G. Finish according to specified requirements.

H. Anchor finish carpentry work to anchorage devices or blocking built-in or directly attached to substrates. Secure to grounds, stripping and blocking with countersunk, concealed fasteners and blind nailing as required for a complete installation. Except where prefinished matching fastener heads are required, use fine finishing nails for exposed nailings, countersunk and filled flush with finished surface, and matching final finish where transparent is indicated.

3.04 WOOD STANDING AND RUNNING TRIM INSTALLATION

A. Install with minimum number of joints practical, using full-length pieces from maximum lengths of lumber available. Do not use pieces less than 24 inches long, except where necessary. Stagger joints in adjacent and related standing and running trim. Cope at returns and miter at corners to produce tight-fitting joints with full-surface contact throughout length of joint. Use scarf joints for end-to-end joints. Plane backs of casings to provide uniform thickness across joints, if required.

1. Match color and grain pattern across joints.
2. Install trim after gypsum board joint finishing operations are completed.
3. Drill pilot holes in hardwood before fastening to prevent spitting. Fasten to prevent movement or warping. Countersink fastener heads on exposed carpentry work and fill holes.
4. Fit exterior joints to exclude water. Apply flat grain lumber with bark side exposed to weather.

3.05 ADJUSTMENT, CLEANING, FINISHING, AND PROTECTION

A. Repair damaged and defective finish carpentry work wherever possible to eliminate defects functionally and visually; where not possible to repair properly, replace woodwork. Adjust joinery for uniform appearance.

B. Clean finish carpentry work on exposed and semi-exposed surfaces. Touch-up factory-applied finishes to restore damaged or soiled areas.

Reviewed for Code Compliance
Inspections Division
Approved with Conditions
Date: 10/31/17

C. Preparation for Finishing: Sand work smooth and set all nails and screws. Apply wood filler in expo nail and screw indentations.

D. Cleaning: Keep premises in a neat, safe, and orderly condition at all times during execution of this portion of the work, free from the accumulation of sawdust, cut-ends, and debris.

E. Refer to Division 09 sections for final finishing of installed finish carpentry work.

F. Protection: Installer of finish carpentry work shall advise Contractor of final protection and maintained conditions necessary to ensure that work will be without damage or deterioration at time of acceptance.

END OF SECTION

Reviewed for Code Compliance
Inspections Division
Approved with Conditions
Date: 10/31/17

SECTION 07100

DAMPPROOFING AND WATERPROOFING

PART 1 GENERAL

1.01 SUMMARY

A. Section Includes:

1. Sheet Membrane Waterproofing
2. Under-Slab-On-Grade Vapor Retarder

B. Related Sections:

1. Section 03 30 00 (03300) - Cast-In-Place Concrete
2. Section 04 20 00 (04200) - Unit Masonry
3. Section 07 20 00 (07200) – Thermal Protection

1.02 SYSTEM DESCRIPTION

A. General: Provide waterproofing that prevents the passage of liquid water under hydrostatic pressure and complies with requirements as demonstrated by testing performed by an independent testing agency of manufacturer's current sheet membrane.

1.03 SUBMITTALS

A. Submit "Letter of Conformance" in accordance with Section 01 33 00 (01330) with the following supporting data:

1. Include product data on each type of dampproofing and waterproofing product specified, including data substantiating that materials comply with specified requirements.
   a. Mark each copy to identify applicable products, characteristics, models, options and other supplemental data to clearly communicate information specific to this project.

B. Samples, 3 x 6 inches minimum size, of each fluid-applied and sheet membrane waterproofing material specified for Project.

1.04 QUALITY ASSURANCE

A. Installer Qualifications: Engage an experienced Installer who has completed fluid-applied and sheet membrane waterproofing applications similar in material, design, and extent to that indicated for Project and that has resulted in construction with a record of successful in-service performance.

1. Assign work closely associated with waterproofing, including (but not limited to) waterproofing accessories, and flashings used in conjunction with waterproofing, expansion joints in membrane, insulation, and protection course on membrane, to Installer of fluid-applied waterproofing, for single, undivided responsibility.

B. Single-Source Responsibility: Obtain primary waterproofing materials of each type required from a single manufacturer.

C. Pre-Installation Conference: A pre-installation conference shall be held prior to commencement of field operations to establish procedures to maintain optimum working conditions and to coordinate this work with related and adjacent work. Agenda for meeting shall include review of special details and flashing.

Reviewed for Code Compliance
Inspections Division
Approved with Conditions
Date: 10/31/17

1.05 DELIVERY, STORAGE, AND HANDLING

A. Deliver materials to Project site in original packages with seals unbroken, labeled w... manufacturer'' name, product, date of manufacturer, and directions for storage.

B. Store materials in their original undamaged packages in a clean, dry, protected location and within temperature range required by waterproofing manufacturer. Protect stored materials from direct sunlight.

1.06 PROJECT CONDITIONS

A. Environmental Conditions: Apply waterproofing within range of ambient and substrate temperatures recommended by waterproofing manufacturer. Do not apply waterproofing to a damp or wet substrate.

1. Do not apply waterproofing in snow, rain, fog, or mist.

B. Maintain adequate ventilation during penetration and application of waterproofing materials.

PART 2 PRODUCTS

2.01 MATERIALS, GENERAL

A. General Compatibility: Provide products that are recommended by manufacturer to be fully compatible with indicated substrates.

2.02 WATERPROOFING FOR ELEVATOR PIT

A. Approved Manufacturers:

1. “Thoroseal Foundation Coating” Thoro Porducts.

2.03 -SLAB-ON-GRADE VAPOR RETARDER:

A. Vapor Retarder Under-Slabs-On-Grade:

1. Plastic Vapor Retarder: ASTM E1745, Class C, with maximum performance rating of 0.04 perm. Provide in lengths and widths required for least number of seams.

a. Under Slab: 10 mils thick.

2. Vapor-Retarder Tape: Pressure-sensitive tape of type recommended by vapor retarder manufacturer for sealing joints and penetrations in vapor retarder.

3. Manufacturers:

a. “Stego Wrap (10 mil) Vapor Barrier”; Stego Industries, LLC (877-464-7834)

b. "Vapor-Mat (10 mil) Underslab Vapor Retarder"; W.R. Meadows, Inc. (800-342-5976)

c. “Moistop Plus”; Fortifiber Corporation (800-773-4777)

2.04 MISCELLANEOUS MATERIALS

A. In addition to primary waterproofing materials, provide the following:

1. Primer/Filler/Sealer: As recommended by waterproofing manufacturer.

2. Flashings, Cant Strips, and Accessories: As recommended by waterproofing manufacturer.

3. Protection Course: Board as approved by system manufacturer, premolded, 1/8 inch (3 mm) thick, semirigid board consisting of mineral-stabilized asphalt core sandwiched between layers of asphalt-saturated felt, surface-coated with asphalt and sealed to core under heat and pressure, and provided with polyethylene film facings.

Reviewed for Code Compliance
Inspections Division
Approved with Conditions
Date: 10/31/17

a. Avendra, LLC Preferred Manufacturers:
   1) None
b. Approved Manufacturers:
   1) "Ram-Tough Protection Board"; The Barrett Co. (800-647-0100)
   2) "PC-2 Protection Course"; W.R. Meadows, Inc. (800-342-5976)
   3) "Protection Sheet"; Pecora Corp. (800-523-6688)
   4) "Protection Course II"; Sonneborn Division, ChemRex, a Degussa Construction Chemicals Americas Company (800-243-6739)
   5) "Tremboard"; Tremco, Inc. (800-562-2728)

PART 3 EXECUTION

3.01 EXAMINATION

A. Examine substrates, areas, and conditions under which waterproofing systems will be applied, with Installer present, for compliance with requirements. Do not proceed with installation until unsatisfactory conditions have been corrected.
   1. Do not proceed with installation until after minimum concrete curing period recommended by waterproofing manufacturer.
   2. Verify substrate is visibly dry and free of moisture. Test for capillary moisture by plastic sheet method according to ASTM D4263.

B. Inspect concrete and concrete masonry surfaces for:
   1. Contamination: Algae, chalkiness, dirt, dust, efflorescence, form oil, fungus, grease, mildew or other foreign substances.
   2. Surface absorption and chalkiness.
   3. Cracks: Measure crack width and record location of cracks.
   4. Damage and deterioration.
   5. Moisture content and moisture damage:
      a. Use a moisture meter to determine if the surface is dry enough to receive the air and moisture barrier and record any areas of moisture damage or excess moisture.
   6. Compliance with specification tolerances:
      a. Record areas that are out of tolerance (greater than 1/4 inch in 8-0 feet deviation in plane).

C. Notify Owner's Representative in writing of anticipated problems using waterproofing over substrate.

3.02 PREPARATION

A. Clean substrate of projections and substances detrimental to work; comply with instructions of prime materials manufacturer.

B. Install cant strips and similar accessories as shown and as recommended by prime materials manufacturer even though not shown.

C. Fill voids, seal joints, and apply bond breakers as recommended by prime materials manufacturer.

D. Prime substrate as recommended by prime materials manufacturer.

Reviewed for Code Compliance
Inspections Division
Approved with Conditions
Date: 10/31/17

3.03 INSTALLATION - GENERAL

A. Comply with manufacturer's written installation recommendations, including preparation of substrate surfaces, detail coatings of joints and planar changes in substrate, and priming of substrates.

B. Mix separately packaged components in accordance with manufacturer's written recommendations.

3.04 INSTALLATION - SHEET MEMBRANE WATERPROOFING

A. Apply waterproofing membrane material to substrates and adjoining surfaces indicated to receive membrane. Apply in accordance with manufacturer's recommendations to obtain thicknesses specified and using applicators and techniques best suited for slope and type of substrate to which applied.

1. If two-coat application is required to obtain membrane thickness specified below, apply second coat only after initial coat has cured as recommended by manufacturer.

2. Provide 60 mil (average) membrane thickness, with minimum 50 mil thickness.

B. Install sheet membrane waterproofing material to substrates and adjoining surfaces indicated to receive membrane. Install in accordance with manufacturer's recommendations using applicators and techniques best suited for type of substrate to which applied.

C. Install sheet-type flashings and joint covers where indicated and as recommended by prime materials manufacturer. Extend flashings onto perpendicular surfaces and other work penetrating substrate to not less than 6 inches beyond finished surface to be applied over waterproofing.

D. Permit membrane to cure under conditions that will not contaminate or deteriorate waterproofing material. Block off traffic and protect membrane from physical damage.

E. Install protection course on cured membrane (after testing, if required) without delay to minimize period of membrane exposure.

1. On vertical surfaces comply with waterproofing manufacturer's recommendations for adhesion of protection course to membrane.

2. In-Place Testing: Before completed membranes on horizontal surfaces are covered by protection course or other work, test for leaks with 2 inch depth of water maintained for 24 hours. Repair any leaks revealed by examination of substructure, and repeat test until no leakage is observed.

F. Provide separation between waterproofing membrane and non-compatible substrates and materials in accordance with manufacturers published instructions.

3.05 INSTALLATION - UNDER-SLAB-ON-GRADE VAPOR RETARDER

A. General: Extend vapor and moisture barriers to extremities of areas to be protected from vapor transmission. Extend vapor and moisture barriers to cover miscellaneous voids in insulated substrates, including those which have been stuffed with loose fiber-type insulation.

B. Seal joints caused by pipes, conduits, electrical boxes, and similar items penetrating vapor retarders with vapor-retarder tape of type recommended by vapor retarder manufacturer to create an air-tight seal between penetrating objects and vapor retarder.

Reviewed for Code Compliance
Inspections Division
Approved with Conditions
Date: 10/31/17

C. Repair any tears or punctures in vapor and moisture barriers immediately bef concealment by other work. Cover with vapor-retarder tape or another layer of va retarder.

D. Refer to Section 07 20 00 for installation of Under-slab-on-grade insulation.

3.06 PROTECTING AND CLEANING

A. Protect waterproofing from damage and wear during application and remainder of construction period, according to manufacturer's written instructions.

B. Clean spillage and soiling from adjacent construction using cleaning agents and procedures recommended by manufacturer of affected construction.

END OF SECTION

Reviewed for Code Compliance
Inspections Division
Approved with Conditions
Date: 10/31/17

SECTION 07200

THERMAL PROTECTION

PART 1 GENERAL

1.01 SUMMARY

A. Section Includes:

1. Foundation Wall and Under Slab Insulation
2. Sound Attenuation Insulation
3. Air-Infiltration Barrier

B. Related Sections:

1. Section 04 20 00 (04200) - Unit Masonry
2. Section 06 10 00 (06100) - Rough Carpentry
3. Section 06 20 00 (06200) - Finish Carpentry
4. Section 07 10 00 (07100) – Dampproofing and Waterproofing
5. Section 07 62 00 (07620) - Sheet Metal Flashing and Trim
6. Section 07 84 00 (07840) - Firestopping
7. Section 09 21 16 (09250) - Gypsum Board Assemblies

1.02 QUALITY ASSURANCE

A. Fire Test Response Characteristics: Provide insulation materials which are identical to those whose fire-test-response characteristics, as listed for each material or assembly of which insulation is a part, have been determined by testing, per methods indicated below, by UL or other testing and inspecting agency acceptable to authorities having jurisdiction.

1. Surface Burning Characteristics: ASTM E84
2. Fire Resistance Ratings: ASTM E119
3. Combustion Characteristics: ASTM E136

B. Asbestos Content of Inorganic Insulations: provide insulations composed of mineral fibers or mineral ores which contain no asbestos of any type of mixture of types occurring naturally as impurities as determined by polarized light microscopy test per Appendix A of 40 CFR 763.

C. All insulation in roof and wall assemblies shall be approved for use without an additional thermal barrier in accordance with Local Building Codes.

1.03 DELIVERY, STORAGE, AND HANDLING

A. Deliver insulation in original labeled bundles.

B. General Protection: Protect insulations from physical damage and from becoming wet, soiled, or covered with ice or snow. Comply with manufacturer's recommendations for handling, storage, and protection during installation.

C. Protection for Plastic Insulation:

Reviewed for Code Compliance
Inspections Division
Approved with Conditions
Date: 10/31/17

1. Do not expose to sunlight, except to extent necessary for period of installation a concealment.
2. Protect against ignition at all times. Do not deliver plastic insulating materials to project site ahead of installation time.
3. Complete installation and concealment of plastic materials as rapidly as possible in each area of work.

1.04 PROJECT CONDITIONS

A. The Installer must examine the substrate and the conditions under which insulation work is to be performed and notify the Architect in writing of unsatisfactory conditions. Do not proceed with the work until unsatisfactory conditions have been corrected in a manner acceptable to the Installer.

B. Weather Conditions: Proceed with work only when weather conditions are in compliance with manufacturer's recommended limitations, and when conditions will permit the work to proceed in accordance with requirements and the manufacturer's recommendations.

C. Do not apply insulation to damp, frozen, dirty, dusty, or surfaces unacceptable to manufacturer.

D. Coordinate this work with all trades and protect it after installation.

PART 2 PRODUCTS

2.01 MANUFACTURERS

A. Extruded Polystyrene Foam Board Insulation - Foundation Walls and Under Slab.

a. "Styrofoam Square Edge"; Dow Chemical Company (800-441-4369)

b. "Foamular 250"; Owens-Corning (800-438-7465)

B. Polyisocyanurate –

a. Atlas Stucco Shield", 2" In Dryvit SMD assembly

b. Atlas Rboard, 2" with Barrier in Brick veneer wall

C. Batt Insulation: Fiberglass by Owens Corning or equal. See Drawings for thickness.

INSULATING MATERIALS

D. General: Provide insulating materials which comply with requirements indicated for materials, compliance with referenced standards, and other characteristics.

E. Extruded Polystyrene Board Insulation: Rigid, cellular polystyrene thermal insulation with closed-cells and integral high density skin, formed by the expansion of polystyrene base resin in an extrusion process to comply with ASTM C578 for Type indicated; with 5-year aged r-values of 5.4 and 5 at 40 and 75 deg. F., respectively; and as follows:

Reviewed for Code Compliance
Inspections Division
Approved with Conditions
Date: 10/31/17

1. Type IV, 1.6 lb./cu. ft. min. density, unless otherwise indicated.

F. Accessories:

1. Nails and Staples: Steel wire, galvanized, type and size to suit application.
2. Tape: Polyethylene or Polyester, self-adhering type, 2 inches wide.
3. Insulation Fasteners: Steel impale spindle and clip on flat metal base, self adhering backing, length to suit insulation thickness, capable of securely and rigidly fastening insulation in place.

PART 3 EXECUTION

3.01 EXAMINATION

A. Require Installer to examine substrates and conditions under which insulation work is to be performed. A satisfactory substrate is one that complies with requirements of the section in which substrate and related work is specified. Obtain Installer's written report listing conditions detrimental to performance of work in this section. Do not proceed with installation of insulation until unsatisfactory conditions have been corrected.

1. Verify adjacent materials are dry and ready to receive insulation.
2. Verify mechanical and electrical services within insulated spaces have been installed and tested.
3. Verify substrate surface is flat, free of honeycomb, fins, irregularities, and materials that will impede adhesive bond.

3.02 PREPARATION

A. Clean substrates of substances harmful to insulations or vapor retarders, including removal of projections which might puncture vapor retarders.

3.03 INSTALLATION, GENERAL

A. Comply with manufacturer's instructions for particular conditions of installation in each case. If printed instructions are not available or do not apply to project conditions, consult manufacturer's technical representative for specified recommendations before proceeding with work.

1. Verify insulation boards are unbroken and free of damage.

B. Extend insulation full thickness as shown over entire area to be insulated. Cut and fit tightly around obstructions, and fill voids with insulation. Remove projections which interfere with placement.

C. Apply a single layer of insulation of required thickness, unless otherwise shown or required to make up total thickness.

D. Trim insulation neatly to fit spaces. Use boards free of damage.

E. Fit insulation tight in spaces and tight to exterior side of mechanical and electrical services within the plane of insulation. Leave no gaps or voids.

F. Install all insulation in accordance with manufacturer's specifications.

Reviewed for Code Compliance
Inspections Division
Approved with Conditions
Date: 10/31/17

G. Water-Piping Coordination: If water piping is located within insulated exterior wa coordinate location of piping to ensure that it is placed on warm side of insulation a insulation encapsulates piping.

3.04 INSTALLATION OF PERIMETER AND UNDER-SLAB INSULATION

A. On vertical surfaces, set units in adhesive applied in accordance with manufacturer's instructions. Use type of adhesive recommended by manufacturer of insulation.

B. Protect top surface of horizontal insulation (from damage during concrete work) by application of protection board.

3.05 INSTALLATION OF GENERAL BUILDING INSULATION

A. Apply insulation units to substrate by method indicated, complying with manufacturer's recommendations. If no specific method is indicated, bond units to substrate with adhesive or use mechanical anchorage to provide permanent placement and support of units.

B. Set vapor retarder faced units with vapor retarder to warm side of construction, except as otherwise indicated. Do not obstruct ventilation spaces, except for firestopping.

1. Tape joints and ruptures in vapor retarder, and seal each continuous area of insulation to surrounding construction to ensure air-tight installation.

C. Install glass fiber blankets in cavities formed by framing members according to the following requirements.

1. Use blanket widths and lengths that fill cavities formed by framing members. Where more than one length is required to fill cavity, provide lengths that will produce a snug fit between ends.

2. Place blankets in cavities formed by framing members to produce a friction fit between edges of insulation and adjoining framing members.

3.06 PROTECTION

A. General: Protect installed insulation and vapor retarders from harmful weather exposures and from possible physical abuses, where possible by non-delayed installation of concealing work or, where that is not possible, by temporary covering or enclosure.

END OF SECTION

Reviewed for Code Compliance
Inspections Division
Approved with Conditions
Date: 10/31/17

SECTION 07210

MOISTURE AND THERMAL PROTECTION
SPRAY FOAM INSULATION

CORBOND® III ***Performance Insulation System®***

All spray applied insulation as shown on drawings or Specified herein shall be the **CORBOND** Performance Insulation System® as manufactured by Corbond Corporation of Bozeman, Montana OR EQUAL.

CORBOND shall be installed by technicians in accordance with manufacturer's instructions.

I. GENERAL

A. Related documents: The general provisions of the contract and all codes and standards referenced.

B. Description of the Work:

1. The extent of **CORBOND** insulation is shown on the drawings.
2. The applications of **CORBOND** include the following:
   a. Rigid spray-in-place perimeter floor header (rim joist, etc.) insulation. Provide minimum R-Value of 21 at all exterior wall applications. (Thermal barrier requirement exception at floor header for class 1, 1.5 – 2.0 lb. spray foam when applied at 3.25 thickness or less per IBC/IRC).

3. **Related Work:**
   a. Spray-on Thermal Barrier: Division 7 (071).
   b. Spray-on Ignition Barrier: Division 7 (071).
   c. Gypsum Drywall System: Division 9 (092000).

4. **Quality assurance:**
   a. Thermal Conductivity: K = .15 (ASTM-C-518).
   b. R-Factor = 6.6 per inch.
   c. Density = 2.0 lbs/cu ft. in-place (ASTM D-1622).
   d. Permeance = .90 at 2.5 inch thickness (ASTM-E-96).
   e. Surface Burning Characteristics: Class I (ASTM-E-84-91a) **Flame Spread <25, Smoke Density <450. (1.5 inch, 4inch, 6inch)
   f. Recognizable lavender trademark color.
5. **Product handling:**
   a. Do not store containers in direct sunlight. Keep drums covered. Empty container disposal by technicians in accordance with current law and industry standard practice.
   b. Store raw materials at 60° F to 70° F.
   c. Fire hazard class of raw material stored on site: Combustible liquid, Class 3B.
   d. Transportation Class 55, NOIBN, Non-Hazardous

Reviewed for Code Compliance
Inspections Division
Approved with Conditions
Date: 10/31/17

e. WARNING: Breathing hazard during application of insulation materials. Do not enter without proper respiratory protection. No smoking or open flame.
f. Process materials in accordance with **CORBOND** published Technical Data.

6. **Job Conditions:**
   a. Examination of substrate: Technicians will examine the substrate and conditions under which the spray insulation work is to be performed, and notify the contractor in writing of any unsatisfactory conditions, such as: 1. Excessive dirt or oil on substrate. 2. Excessive moisture present as dampness, dew, frost or water. 3. Substrate temperatures outside applicable limits.
   b. Cover tools and work of other trades as required to prevent damage from overspray.
   c. Do not weld or torch near **CORBOND**. Cover as soon as possible with subsequent work.

II. PRODUCTS

A. Materials:

1. Crawlspace perimeter and floor header (box sill, rim joist) insulation: **CORBOND** Performance Insulation System® installed to thickness required to provide R-Value of 21.

III. EXECUTION

A. Installation:

Installation of the **CORBOND** Performance Insulation System® is performed by technicians familiar with the processing of two component polyurethane foams and in complete accord with application instructions provided by the manufacturer. These technicians employ equipment with preset component ratio and electronically controlled heat input to assure in-place consistency of finished product and performance. Contact **CORBOND** Corporation, Bozeman, Montana, (888) 949-9089 or direct at (406) 586-4585.

END OF SECTION

Reviewed for Code Compliance
Inspections Division
Approved with Conditions
Date: 10/31/17

DRYVIT SYSTEMS, INC.
MANUFACTURER'S SPECIFICATION
SECTION 07240
OUTSULATION® SMD SYSTEM™
EXTERIOR INSULATION AND FINISH SYSTEM CLASS PB

PART I - GENERAL

1.01 SUMMARY

A. This document is to be used in preparing specifications for projects utilizing the Dryvit Outsulation SMD System. For complete product description and usage refer to:
1. Dryvit Outsulation SMD Data Sheet, DS441
2. Dryvit Outsulation SMD System Application Instructions, DS123
3. Dryvit Outsulation SMD System Installation Details, DS163

B. Related Sections
1. Unit Masonry – Section 04200
2. Concrete – Sections 03300 and 03400
3. Light Gauge Cold Formed Steel Framing – Section 05400
4. Wood Framing – Section 06100
5. Sealant – Section 07900
6. Flashing – Section 07600

1.02 REFERENCES

A. Section Includes
1. ASTM B 117 (Federal Test Standard 141A Method 6061) Standard Practice for Operating Salt Spray (Fog) Apparatus
2. ASTM C 150 Standard Specification for Portland Cement
3. ASTM C 297 Standard Test Method for Flatwise Tensile Strength of Sandwich Constructions
4. ASTM C 1063 Standard Specification for Installation of Lathing and Furring to Receive Interior and Exterior Portland Cement-Based Plaster
5. ASTM C 1177 Standard Specification for Glass Mat Gypsum Substrate for Use as Sheathing
6. ASTM C 1396 (formerly C 79) Standard Specification for Gypsum Board
7. ASTM D 968 (Federal Test Standard 141A Method 6191) Standard Test Methods for Abrasion Resistance of Organic Coatings by Falling Abrasive
8. ASTM D 1784 Standard Specification for Rigid Poly (Vinyl Chloride) (PVC) Compounds and Chlorinated Poly (Vinyl Chloride) (CPVC) Compounds
9. ASTM D 1970 Standard Specification for Self-Adhering Polymer Modified Bituminous Sheet Materials Used as Steep Roofing Underlayment for Ice Dam Protection
10. ASTM D 2247 (Federal Test Standard 141A Method 6201) Standard Practice for Testing Water Resistance of Coatings in 100% Relative Humidity
11. ASTM D 2898 Standard Test Method for Accelerated Weathering of Fire-Retardant-Treated Wood for Fire Testing
12. ASTM D 3273 Standard Test Method for Resistance to Growth of Mold on the Surface of Interior Coatings in an Environmental Chamber
13. ASTM D 4060 Standard Test Method for Abrasion Resistance of Organic Coatings by the Taber Abraser
14. ASTM E 84 Standard Test Method for Surface Burning Characteristics of Building Materials
15. ASTM E 96 Standard Test Methods for Water Vapor Transmission of Materials
16. ASTM E 283 Standard Test Method for Determining Rate of Air Leakage Through Exterior Windows, Curtain Walls and Doors Under Specified Pressure Differences Across the Specimen
17. ASTM E 330 Test Method for Structural Performance of Exterior Windows, Doors and Curtain Walls by Uniform Static Air Pressure Difference
18. ASTM E 331 Test Method for Water Penetration of Exterior Windows, Skylights, Doors and Curtain Walls by Uniform Static Air Pressure Difference
19. ASTM E 2098 Test Method for Determining the Tensile Breaking Strength of Glass Fiber Reinforcing Mesh for use in Class PB Exterior Insulation and Finish Systems (EIFS), after Exposure to Sodium Hydroxide Solution.
20. ASTM E 2134 Test Method for Evaluating the Tensile-Adhesion Performance of Exterior Insulation and Finish Systems (EIFS)
21. ASTM E 2178 Standard Test Method for Air Permeance of Building Materials
22. ASTM E 2273 Test Method for Determining the Drainage Efficiency of Exterior Insulation and Finish Systems (EIFS) Clad Wall Assemblies
23. ASTM E 2357 Standard Test Method for Determining Air Leakage of Air Barrier Assemblies
24. ASTM E 2430 Standard Specification for Expanded Polystyrene (EPS) Thermal Insulation Boards for use in Exterior Insulation and Finish Systems (EIFS)
25. ASTM E 2485 (formerly EIMA Std. 101.01) Standard Test Method for Freeze-Thaw Resistance of Exterior Insulation and Finish Systems (EIFS) and Water-Resistive Barrier Coatings
26. ASTM E 2486 (formerly EIMA Std. 101.86) Standard Test Method for Impact Resistance of Class PB and PI Exterior Insulation and Finish Systems (EIFS)
27. ASTM E 2568 Standard Specification for PB Exterior Insulation and Finish Systems

Reviewed for Code Compliance
Inspections Division
Approved with Conditions
Date: 10/31/17

28. ASTM E 2570 Standard Test Method for Evaluating Water-Resistive Barrier (WRB) Coatings Used Under Exte Insulation and Finish Systems (EIFS) or EIFS with Drainage
29. ASTM G 155 (Federal Test Standard 141A Method 6151) Standard Practice for Operating-Xenon Arc Light Apparatus, for Exposure of Nonmetallic Materials
30. DS131, Dryvit Expanded Polystyrene Insulation Board Specification
31. DS151, Custom Brick™ Polymer System Specifications for Use on Vertical Walls
32. DS152, Dryvit Cleaning and Recoating
33. DS153, Dryvit Expansion Joints and Sealants
34. DS159, Dryvit Water Vapor Transmission
35. DS417 Dryvit Genesis®
36. DS452 Dryvit Genesis® DM
37. DS455 Backstop® NT™
38. DS494, Dryvit AquaFlash® System
39. DS705, Reflectit™
40. Mil Std E5272 Environmental Testing
41. Mil Std 810B Environmental Test Methods

1.03 DEFINITIONS

A. Base Coat: Material used to encapsulate one or more layers of reinforcing mesh fully embedded that is applied to the outside surface of the Polyisocyanurate insulation board.
B. Building Expansion Joint: A joint through the entire building structure designed to accommodate structural movement.
C. Contractor: The contractor that installs the Outsulation SMD System to the substrate.
D. Dryvit: Dryvit Systems, Inc., the manufacturer of the Outsulation SMD System, a Rhode Island corporation.
E. Expansion Joint: A structural discontinuity in the Outsulation SMD System.
F. Finish: An acrylic-based coating, available in a variety of textures and colors that is applied over the base coat.
G. Insulation Board: Polyisocyanurate insulation board, which is affixed to the substrate and expanded polystyrene used as foam shapes where applicable.
H. Mechanical Fasteners: A combination of polypropylene washers and corrosion resistant fasteners used to secure the insulation board to the substrate.
I. Reinforcing Mesh: Glass fiber mesh(es) used to reinforce the base coat and to provide impact resistance.
J. Sheathing: A substrate in sheet form.
K. Substrate: The material to which the Outsulation SMD System is affixed.
L. Substrate System: The total wall assembly including the attached substrate to which the air/water-resistive barrier is affixed.

1.04 SYSTEM DESCRIPTION

A. General: The Dryvit Outsulation SMD System is an Exterior Insulation and Finish System (EIFS) Class PB, designed for use on IBC/IRC Type V combustible type construction. Outsulation SMD System is installed over a code approved water-resistive barrier and consists of a drainage medium and drainage accessories, an approved Polyisocyanurate insulation board, mechanical fasteners, base coat, reinforcing mesh(es) and finish.
B. Acceptable system configuration options include:

System Configuration	Water-Resistive Barrier	Drainage Medium	Polyisocyanurate Minimum Thickness	Attachment	Base Coat
1	Backstop NT or Sheet membrane	Drainage Mat or Dryvit MD Spacer™	15.9 mm (5/8 in)	Mechanical Fasteners	Genesis® or Genesis® DM
2	Tyvek® StuccoWrap	N/A	15.9 mm (5/8 in)	Mechanical Fasteners	Genesis or Genesis DM

C. Design Requirements:
1. Acceptable substrates for the Outsulation SMD System shall be:
   a. Exterior grade gypsum sheathing meeting ASTM C 1396 (formerly C 79) requirements for water resistant core or Type X core at the time of application of the Outsulation SMD System.
   b. Exterior sheathing having a water-resistant core with fiberglass mat facers meeting ASTM C 1177.
   c. Exterior fiber reinforced cement or calcium silicate boards.
   d. APA Exterior or Exposure 1 Rated Plywood, Grade C-D or better, nominal 12.7 mm (1/2 in), minimum, installed with the C face out.
   e. APA Exterior or Exposure 1 Fire Retardant Treated (FRT) Plywood, Grade C-D or better, nominal 12.7 mm (1/2 in), minimum, installed with the C face out.
   f. APA Exposure 1 Rated Oriented Strand Board (OSB) nominal 12.7 mm (1/2 in), minimum. **Note: Applications over OSB sheathing requires a minimum of 2 coats of Backstop NT – Smooth or Spray. Backstop NT – Texture is not recommended for the field of wall application over OSB.**
   g. Unglazed brick, cement plaster, concrete or masonry.
2. Deflection of substrate systems shall not exceed 1/240 times the span.
3. The substrate shall be flat within 6.4 mm (1/4 in) in a 1.2 m (4 ft) radius.

CITY OF PORTLAND, MAINE RESURGAM
Reviewed for Code Compliance
Inspections Division
Approved with Conditions
Date: 10/31/17

4. The slope of inclined surfaces shall not be less than 6:12 (27°). The length of inclined surfaces shall not exceed 305 mm (12 in).
5. At horizontal sealant joints and windowsills projecting 102 mm (4 in) or less, the slope shall not be less than 3:1
6. All areas requiring an impact resistance classification higher than "standard", as defined by ASTM E 2486 (formerly EIMA Standard 101.86), shall be as detailed in the drawings and described in the contract documents. Refer to Section 1.04.D.1.d of this specification.
7. Expansion joints
   a. Design and location of expansion joints in the Outsulation SMD System is the responsibility of the project designer and shall be noted on the project drawings. As a minimum, expansion joints shall be placed at the following locations:
      1) Where expansion joints occur in the substrate system.
      2) Where building expansion joints occur.
      3) At floor lines in wood frame construction.
      4) At floor lines of non-wood frame buildings where significant movement is expected.
      5) Where the Outsulation SMD System abuts dissimilar materials.
      6) Where the substrate type changes.
      7) In continuous elevations at intervals not exceeding 23 m (75 ft).
      8) Where significant structural movement occurs such as changes in roofline, building shape or structural system.
8. Terminations
   a. Prior to applying the Dryvit Outsulation SMD System, wall openings shall be treated with Dryvit AquaFlash System or Flashing Tape. Refer to Dryvit Outsulation SMD System Installation Details, DS163.
   b. The Outsulation SMD System shall be held back from adjoining materials around openings and penetrations such as windows, doors and mechanical equipment a minimum of 12.7 mm (1/2 in) for sealant application. **See Dryvit's Outsulation SMD System Installation Details, DS163, for exceptions and alternate methods.**
   c. At the base of walls, the Outsulation SMD System shall extend a minimum of 25 mm (1 in) below the sill plate onto the foundation and be terminated a minimum of 203 mm (8 in) above finished grade.
   d. For slab-on-grade, the Outsulation SMD System shall extend a minimum of 25 mm (1 in) onto the slab edge.
   e. Sealants
      1) Shall be manufactured and supplied by others.
      2) Shall be compatible with the Outsulation SMD System materials. Refer to current Dryvit publication DS153 for listing of sealants tested by sealant manufacturer for compatibility.
      3) The sealant backer rod shall be closed cell.
9. Vapor Retarders: The use and location of vapor retarders within a wall assembly is the responsibility of the project designer and shall comply with local building code requirements. The type and location shall be noted on the project drawings and specifications. Vapor retarders may be inappropriate in certain climates and can result in condensation within the wall assembly. Refer to Dryvit Publication DS159 for additional information.
10. Dark Colors: The use of dark colors must be considered in relation to wall surface temperature as a function of local climatic conditions. Use of dark colors in high temperature climates can affect the performance of the system.
11. Flashing: Shall be provided at all roof-wall intersections, windows, doors, chimneys, decks, balconies and other areas as necessary to prevent water from getting behind the Outsulation SMD System.

D. Performance Requirements
1. The Outsulation SMD System shall have been tested as follows:
   a. Air/Water-Resistive Barrier Coating

TEST	TEST METHOD	CRITERIA	RESULTS
Tensile Bond	ASTM C 297/E 2134*	Minimum 104 kPa (15 psi)	Substrate: Minimum 131 kPa (19 psi) (Backstop NT) Flashing Minimum 2970 kPa (431 psi) (Backstop NT)
Freeze-thaw	ASTM E 2485 Method B*	No deleterious effects after 10 cycles	Passed - No deleterious effects after 10 cycles
Water Resistance	ASTM D 2247*	No deleterious effects after 14 days exposure[1]	No deleterious effects after 14 days exposure
Water Vapor Transmission	ASTM E 96 Proc. B*	Vapor Permeable	Backstop NT: 7 Perms[2] Backstop NT Spray: 7.9 Perms[2] Backstop DMS: 30 Perms
Air Leakage	ASTM E 283	No ICC or ANSI/EIMA Criteria	0.01 l/sec/m^2 (0.002 cfm/ft^2) (Backstop NT)
Air Permeance	ASTM E 2178	No ICC or ANSI/EIMA Criteria	0.0006 l/s/m^2 @ 75Pa (1.2x10^{-4} cfm/ft^2 @ 1.6 psf) (Backstop NT)
Air Barrier Assembly	ASTM E 2357	No ICC or ANSI/EIMA Criteria	0.05 l/sec m^2 @300 Pa (<0.001 cfm/ft^2 @ 6.24 psf) (Backstop NT)

CITY OF PORTLAND, MAINE
RESURGAM
Reviewed for Code Compliance
Inspections Division
Approved with Conditions
Date: 10/31/17

Nail Sealability	ASTM D 1970	No ICC or ANSI/EIMA Criteria	Passed ABAA Criteria
Structural Performance	ASTM E 1233 Proc. A*	Minimum 10 positive cycles at 1/240 deflection; No cracking in field, at joints or interface with flashing	Passed
Racking	ASTM E 72*	No cracking in field, at joints or interface with flashing at net deflection of 3.2 mm (1/8 inch)	Passed
Restrained Environmental	ICC-ES Procedure*	5 cycles; No cracking in field, at joints or interface with flashing	Passed
Water Penetration	ASTM E 331*	No water penetration beyond the inner-most plane of the wall after 15 minutes at 137 Pa (2.86 psf)	Passed
Weathering			
UV Exposure	ASTM D 2898 Method B*	210 hours of exposure	Passed
Accelerated Aging	ICC-ES Procedure*	25 cycles of wetting and drying	Passed
Hydrostatic Pressure Test	AATCC 127*	ICC: 549 mm (21.6 in) water column for 5 hours	Passed
Surface Burning Characteristics	ASTM E 84	Flame Spread < 25 Smoke Developed < 450	Passed

* ASTM E 2570 Standard Test Method for Evaluating Water-Resistive Barrier (WRB) Coatings Used Under Exterior Insulation and Finish Systems (EIFS) or EIFS with Drainage, also referred to as AC212 – Acceptance Criteria for Water-Resistive Coatings Used as Water-Resistive Barriers over Exterior Sheathing

1. No cracking, checking, rusting, crazing, erosion, blistering, peeling, or delamination when viewed under 5x magnification
2. Defined as a Class III vapor retarder per the 2009 IBC and IRC

CITY OF PORTLAND, MAINE RESURGAM
Reviewed for Code Compliance
Inspections Division
Approved with Conditions
Date: 10/31/17

b. System

TEST	TEST METHOD	CRITERIA	RESULTS
Abrasion Resistance	ASTM D 968	No deleterious effects after 500 liters (528 quarts)	No deleterious effects after 1000 liters(1056 quarts)
Accelerated Weathering	ASTM G 155 Cycle 1*	No deleterious effects after 2000 hours	No deleterious effects after 5000 hours
	ASTM G 154 Cycle 1* (QUV)		No deleterious effects after 5000 hours
Freeze-Thaw	ASTM E 2485 Method A*	No deleterious effects after 60 cycles	Passed - No deleterious effects after 90 cycles
	ASTM C 67 modified	No deleterious effects after 60 cycles	Passed - No deleterious effects after 60 cycles
	ASTM E 2485 Method B*	No deleterious effects after 10 cycles	Passed - No deleterious effects after 10 cycles
Mildew Resistance	ASTM D 3273	No growth during 28 day exposure period	No growth during 60 day exposure period
Water Resistance	ASTM D 2247*	No deleterious effects after 14 days exposure	No deleterious effects after 42 days exposure
Taber Abrasion	ASTM D 4060	N/A	Passed 1000 cycles
Salt Spray Resistance	ASTM B 117*	No deleterious effects after 300 hours exposure	No deleterious effects after 1000 hours exposure
Water Penetration	ASTM E 331*	No water penetration beyond the inner-most plane of the wall after15 minutes at 137 Pa (2.86 psf)	Passed 15 minutes at 137 Pa (2.86 psf)
Water Vapor Transmission	ASTM E 96 Procedure B*	Vapor permeable	EPS 5 perm-inch Base Coat[1] 40 Perms Finish[2] 40 Perms
Drainage Efficiency	ASTM E 2273	Minimum Drainage Efficiency of 90%	Passed

* ASTM E 2568 Standard Specification for PB Exterior Insulation and Finish Systems, also referred to as AC235 – Acceptance Criteria for EIFS Clad Drainage Wall Assemblies
1. Base Coat perm value based on Dryvit Genesis®
2. Finish perm value based on Dryvit Quarzputz

c. Structural

TEST	TEST METHOD	CRITERIA	RESULTS
Transverse Wind Load	ASTM E 330*	Withstand positive and negative wind loads as specified by the building code	Minimum: 7.16 kPa (150 psf), Wood frame 16 inch o.c. Minimum:2.86 kPa (60 psf), steel frame 16 in o.c.

* ASTM E 2568 Standard Specification for PB Exterior Insulation and Finish Systems, also referred to as AC235 – Acceptance Criteria for EIFS Clad Drainage Wall Assemblies

d. Impact Resistance: In accordance with ASTM E 2486* (formerly EIMA Standard 101.86).

Reinforcing Mesh[1]/Weight g/m² (oz/yd²)	Minimum Tensile Strengths	EIMA Impact Classification	EIMA Impact Range Joules	(in-lbs)	Impact Test Results Joules	(in-lbs)
Standard - 146 (4.3)	27 g/cm (150 lbs/in)	Standard	3-6	(25-49)	4	(36)
Standard Plus - 203 (6)	36 g/cm (200 lbs/in).	Medium	6-10	(50-89)	6	(56)
Intermediate - 407 (12)	54 g/cm (300 lbs/in).	High	10-17	(90-150)	12	(108)
Panzer® 15[2] - 509 (15)	71 g/cm (400 lbs/in).	Ultra High	>17	(>150)	18	(162)
Panzer 20[2] - 695 (20.5)	98 g/cm (550 lbs/in).	Ultra High	>17	(>150)	40	(352)
Detail Mesh® Short Rolls - 146 (4.3)	27 g/cm (150 lbs/in).	n/a	n/a	n/a	n/a	n/a
Corner Mesh™ - 244 (7.2)	49 g/cm (274 lbs/in).	n/a	n/a	n/a	n/a	n/a

* ASTM E 2568 Standard Specification for PB Exterior Insulation and Finish Systems, also referred to as AC235 – Acceptance Criteria for EIFS Clad Drainage Wall Assemblies
1. It shall be colored blue for product identification bearing the Dryvit logo.
2. Shall be used in conjunction with Standard Mesh (recommended for areas exposed to high traffic).

Reviewed for Code Compliance
Inspections Division
Approved with Conditions
Date: 10/31/17

2. The Outsulation SMD Components shall have been tested for:
   a. Durability

TEST	TEST METHOD	CRITERIA	RESULTS
Reinforcing Mesh Alkali Resistance of Reinforcing Mesh	ASTM E 2098*	> 21dN/cm (120 pli) retained tensile strength after exposure	Passed
Polyisocyanurate (Physical Properties) Density	ASTM D 1622	32 kg/m^3 (2.0 lb/ft^3)	Passed
Thermal Resistance	ASTM C 177, C 518	5.6@ 23.9 °C (75 °F)	Passed
Water Absorption	ASTM C 272	2.55 % max. by volume	Passed
Compressive Strength	ASTM D 1621 Proc. A	179 kPa (26 psi) min.	Passed
Flexural Strength	ASTM C 203	814 kPa (118 psi) min.	Passed
Flame Spread **Smoke Developed**	ASTM E 84* ASTM E 84*	25 max. 450 max.	Passed Passed

* ASTM E 2568 Standard Specification for PB Exterior Insulation and Finish Systems, also referred to as AC235 – Acceptance Criteria for EIFS Clad Drainage Wall Assemblies

1.05 SUBMITTALS

A. Product Data: The contractor shall submit to the owner/architect the manufacturer's product data sheets describing products, which will be used on this project.

B. Samples: The contractor shall submit to the owner/architect two (2) samples of the Outsulation SMD System for each finish, texture and color to be used on the project. The same tools and techniques proposed for the actual installation shall be used. Samples shall be of sufficient size to accurately represent each color and texture being utilized on the project.

C. Test Reports: When requested, the contractor shall submit to the owner/architect copies of selected test reports verifying the performance of the Outsulation SMD System.

1.06 QUALITY ASSURANCE

A. Qualifications:
   1. System Manufacturer: Shall be Dryvit Systems, Inc. All materials shall be manufactured or sold by Dryvit and shall be purchased from Dryvit or its authorized distributors.
      a. Materials shall be manufactured at a facility covered by a current ISO 9001:2008 and ISO 14001:2004 certification. Certification of the facility shall be done by a registrar accredited by the American National Standards Institute, Registrar Accreditation Board (ANSI-RAB).
   2. Contractor: Shall be knowledgeable in the proper installation of the Dryvit Outsulation SMD System and shall be experienced and competent in the installation of Exterior Insulation and Finish Systems. Additionally, the contractor shall possess a current Outsulation SMD System Trained Contractor Certificate*, issued by Dryvit Systems, Inc.
   3. Insulation Board Manufacturer: Atlas Roofing Corporation for Atlas Stucco-Shield® or Hunter Panels for Xci CG.

B. Regulatory Requirements:
   1. The insulation board shall be separated from the interior of the building by a minimum 15-minute thermal barrier.
   2. The use and maximum thickness of insulation shall be in accordance with the applicable building codes.

C. Certification
   1. The Outsulation SMD System shall be recognized for the intended use by the applicable building code(s).

D. Mock-Up
   1. The contractor shall, before the project commences, provide the owner/architect with a mock-up for approval.
   2. The mock-up shall be of suitable size as required to accurately represent the products being installed, as well as each color and texture to be utilized on the project.
   3. The mock-up shall be prepared with the same products, tools, equipment and techniques required for the actual applications. The finish used shall be from the same batch that is being used on the project.
   4. The approved mock-up shall be available and maintained at the job site.

1.07 DELIVERY, STORAGE AND HANDLING

A. All Dryvit materials shall be delivered to the job site in the original, unopened packages with labels intact.

B. Upon arrival, materials shall be inspected for physical damage, freezing or overheating. Questionable materials shall not be used.
   1. Materials shall be stored at the job site, and at all times, in a cool, dry location, out of direct sunlight, protected from weather and other sources of damage. Minimum storage temperature shall be as follows:
      a. DPR, PMR™, HDP™, Weatherlastic® and E™ Finishes, Color Prime™, Primus®, Genesis® and NCB™: 4 °C (40 °F).
      b. For other products, refer to specific product data sheets.
   2. Maximum storage temperature shall not exceed 38 °C (100 °F). **NOTE: Minimize exposure of materials to temperatures over 32 °C (90 °F). Finishes exposed to temperatures over 43 °C (110 °F) for even short periods may exhibit skinning, increased viscosity and should be inspected prior to use.**

C. Protect all products from inclement weather and direct sunlight.

Reviewed for Code Compliance
Inspections Division
Approved with Conditions
Date: 10/31/17

1.08 PROJECT CONDITIONS

A. Environmental Requirements
1. Application of wet materials shall not take place during inclement weather unless appropriate protection is provi Protect materials from inclement weather until they are completely dry.
2. At the time of Dryvit product application, the air and wall surface temperatures shall be from 4 °C (40 °F) minimum to 38 °C (100 °F) maximum for the following products:
   a. DPR, PMR, HDP, Weatherlastic and E Finishes, Color Prime, Primus, Genesis and NCB.
   b. For other products, refer to specific product data sheets.
3. These temperatures shall be maintained with adequate air ventilation and circulation for a minimum of 24 hours (48 hours for Weatherlastic Finishes, Ameristone, TerraNeo and Lymestone) thereafter, or until the products are completely dry. Refer to published product data sheets for more specific information.

B. Existing Conditions: The contractor shall have access to electric power, clean water and a clean work area at the location where the Dryvit materials are to be applied.

1.09 SEQUENCING AND SCHEDULING

A. Installation of the Outsulation SMD System shall be coordinated with other construction trades.
B. Sufficient manpower and equipment shall be employed to ensure a continuous operation, free of cold joints, scaffold lines, texture variations, etc.

1.10 WARRANTY

A. Dryvit Systems, Inc. shall provide a written moisture drainage and limited materials warranty against defective material upon written request. Dryvit shall make no other warranties, expressed or implied. Dryvit does not warrant workmanship. Full details are available from Dryvit Systems, Inc.
B. The applicator shall warrant workmanship separately. Dryvit shall not be responsible for workmanship associated with installation of the Outsulation SMD System.

1.11 DESIGN RESPONSIBILITY

A. It is the responsibility of both the specifier and the purchaser to determine if a product is suitable for their intended use. The designer selected by the purchaser shall be responsible for all decisions pertaining to design, detail, structural capability, attachment details, shop drawings and the like. Dryvit has prepared guidelines in the form of specifications, installation details, and product data sheets to facilitate the design process only. Dryvit is not liable for any errors or omissions in design, detail, structural capability, attachment details, shop drawings, or the like, whether based upon the information prepared by Dryvit or otherwise, or for any changes which purchasers, specifiers, designers, or their appointed representatives may make to Dryvit's published comments.

1.12 MAINTENANCE

A. Maintenance shall follow the procedures noted in the Dryvit Homeowner's Maintenance Guide, DS235, and repair shall follow the procedures noted in the Dryvit Outsulation SMD System Application Instructions, DS123.
B. All Dryvit products are designed to require minimal maintenance. However, as with all building products, depending on location, some cleaning may be required. See Dryvit publication DS152 on Cleaning and Recoating.
C. Sealants and Flashings shall be inspected on a regular basis and repairs made as necessary.

PART II - PRODUCTS

2.01 MANUFACTURER

A. All components of the Outsulation SMD System shall be supplied or obtained from Dryvit or its authorized distributors. Substitutions or additions of materials other than specified will void the warranty.

2.02 MATERIALS

A. Portland Cement: Shall be Type I or II, meeting ASTM C 150, white or gray in color, fresh and free of lumps.
B. Water: Shall be clean and free of foreign matter.

2.03 COMPONENTS

A. Air/Water-Resistive Barrier Components:
1. Water-Resistive Barrier Coating
   a. Dryvit Backstop NT: A flexible, polymer-based, noncementitious water-resistive coating available in Texture, Smooth and Spray.
   b. Dryvit Grid Tape™: An open weave fiberglass mesh tape with pressure sensitive adhesive available in rolls 102 mm (4 in) wide by 91 m (100 yd) long.
2. Sheet Type Membranes (by others)
   a. Code approved water-resistive barrier such as but not limited to Dupont Tyvek StuccoWrap, Tyvek Home Wrap or Commercial Wrap, #15 Felt, Grade D Paper.

B. Flashing Materials: Used to protect substrate edges at terminations.
1. Liquid Applied: An extremely flexible water-based polymer material, ready for use.
   a. Shall be AquaFlash and AquaFlash Mesh

Reviewed for Code Compliance
Inspections Division
Approved with Conditions
Date: 10/31/17

2. Sheet Type:
   a. Shall be Flashing Tape and Surface Conditioner
      1) Dryvit Flashing Tape™: A high density polyethylene film backed with a rubberized asphalt adhesive avail rolls 102 mm (4 in), 152 mm (6 in) and 229 mm (9 in) wide by 23 m (75 ft) long.
      2) Dryvit Flashing Tape Surface Conditioner™: A water-based surface conditioner and adhesion promoter for the Dryvit Flashing Tape.

C. Dryvit AP Adhesive™: A moisture cure, urethane based adhesive used to adhere the Dryvit Drainage Strip ™ and Drainage Track

D. Accessories
1. Drainage Track (Optional - not required when Drainage Strip is specified): UV treated PVC perforated "J" channel with weep holes, complying with ASTM D 1784 and ASTM C 1063. Shall be one of the following:
   a. Starter Trac STWP - without drip edge by Plastic Components, Inc.
   b. Starter Trac STDE - with drip edge by Plastic Components, Inc.
   c. Universal Starter Track by Wind-lock Corporation
   d. Sloped Starter Strip with Drip by Vinyl Corp.
2. Dryvit Drainage Strip (Optional - not required when Drainage Track is specified): A corrugated plastic material, which provides drainage. Required when using Tyvek StuccoWrap without the Drainage Track.

E. Drainage Medium Options
1. Dryvit Drainage Mat [System 1 (optional when Outsulation SMD System is installed over Tyvek StuccoWrap)]: A blue, 3.2 mm (1/8 in) thick mat composed of open weave polymer threads.
2. Dryvit MD Spacer [System 1 (optional when Outsulation SMD System is installed over Tyvek StuccoWrap)]: A 3.2 mm (1/8 in) thick polyethylene spacer, which separates the insulation board from the substrate.

F. Insulation Board: Atlas Stucco Shield or Hunter Panels Xci CG.
1. Thickness of insulation board shall be minimum 15.9 mm (5/8 in).
2. The insulation board shall be manufactured by Atlas Roofing Corporation or Hunter Panels.

G. Mechanical Fasteners consist of a 44 mm (1 3/4 in) diameter polypropylene plastic plate (washer) with key openings for base coat penetration used in conjunction with a corrosion resistant fastener.
1. Washer
   a. Shall be Wind-Lock® ULP 302 or 402 Plate, or ITW Buildex Grid-Mate™ washer or Grid-Mate with stem.
2. Screws, Nails, Anchors
   a. Wood/Steel Framing with a nailable substrate (Plywood or Oriented Strand Board).
      1) Shall be minimum No. 6, bugle head corrosion resistant screws.
      2) The screws shall be of sufficient length to penetrate the wood substrate a minimum of 19 mm (3/4 in).
      3) Nails shall be minimum 12 gauge (8d), **ring shank**. They shall be hot dipped galvanized and of sufficient length to penetrate the structural base a minimum of 25 mm (1 in). **Ring shank nails are not recommended for attachment to Oriented Strand Board.**
   b. Wood/Steel Framing with a non-structural substrate (gypsum based or similar)
      1) Wood Screws shall be a minimum No. 6, bugle head, corrosion resistant screws and of sufficient length to **penetrate the wood framing** a minimum of 19 mm (3/4 in).
      2) Light Gauge Metal Framing (minimum 20 gauge) requires minimum No. 6, self drilling corrosion resistant screws and shall be of sufficient length to **penetrate the steel framing** a minimum of 9.5 mm (3/8 in).
      3) Nails shall be **ring shank** and a minimum of 12 gauge (8d). They shall be hot dipped galvanized and of sufficient length to **penetrate the wood framing** a minimum of 25 mm (1 in).
   c. Concrete/Masonry
      1) Anchors shall be a minimum 4.8 mm (3/16 in) diameter and corrosion resistant.
      2) Anchors shall be of sufficient length to penetrate the substrate a minimum of 25 mm (1 in).
      3) Pullout values shall be substantiated for the particular substrate and fastener.

H. Insulation Board used for Foam Shapes (where specified): Expanded Polystyrene meeting the Dryvit Specification for Insulation Board, DS131, and the following requirements:
1. The insulation board shall be manufactured by a board supplier listed by Dryvit Systems, Inc.

I. Base Coat: Shall be compatible with the insulation board and reinforcing mesh.
1. Cementitious: A liquid polymer-based material, which is field mixed with Portland cement.
   a. Shall be Genesis
2. Ready mixed: A dry blend cementitious, copolymer-based product, field mixed with water.
   a. Shall be Genesis DM

J. Reinforcing Mesh: A balanced, open weave, glass fiber fabric treated for compatibility with other system materials.
NOTE: Reinforcing meshes are classified by impact resistance and specified by weight and tensile strength as listed in Section 1.04.D.1.d).

K. Finish: Shall be the type, color and texture as selected by the architect/owner and shall be one or more of the following:
1. Standard DPR (Dirt Pickup Resistance): Water-based, acrylic finish with integral color and texture and formulated with DPR chemistry:
   a. Quarzputz® DPR: Open-texture pattern.
   b. Sandblast® DPR: Medium texture.
   c. Freestyle® DPR: Fine texture.
   d. Sandpebble® DPR: Pebble texture.
   e. Sandpebble® Fine DPR: Fine pebble texture.

Reviewed for Code Compliance
Inspections Division
Approved with Conditions
Date: 10/31/17

2. Hydrophobic (HDP™) Finishes: 100% acrylic coating with integral color and texture and formulated with hydropl properties:
   a. Quarzputz® HDP
   b. Sandblast® HDP
   c. Sandpebble® HDP
   d. Sandpebble® Fine HDP
   e. Lymestone™ HDP
3. **E**: Water-based, lightweight acrylic finish with integral color and texture and formulated with DPR chemistry:
   a. Quarzputz® **E**
   b. Sandpebble® **E**
   c. Sandpebble® Fine **E**
4. Specialty: Factory mixed, water-based acrylic
   a. Ameristone: Multi-colored quartz aggregate with a flamed granite appearance.
   b. Stone Mist®: Ceramically colored quartz aggregate.
   c. Custom Brick Finish: Acrylic polymer-based finish used in conjunction with a proprietary template system to create the look of stone, brick, slate or tile.
   d. TerraNeo®: 100% acrylic-based finish with large mica chips and multi-colored quartz aggregates.
   e. Lymestone™: A premixed, 100% acrylic-based finish designed to replicate the appearance of limestone blocks.
   f. Reflectit: 100% acrylic coating providing a pearlescent appearance.
5. Elastomeric DPR (Dirt Pickup Resistance): Water-based, elastomeric acrylic finish with integral color and texture, and formulated with DPR chemistry:
   a. Weatherlastic® Quarzputz
   b. Weatherlastic® Sandpebble
   c. Weatherlastic® Sandpebble Fine
   d. Weatherlastic® Adobe
6. Medallion Series PMR (Proven Mildew Resistance): Water-based, acrylic finish with integral color and texture and formulated with PMR chemistry:
   a. Quarzputz® PMR
   b. Sandblast® PMR
   c. Freestyle® PMR
   d. Sandpebble® PMR
   e. Sandpebble® Fine PMR
7. Coatings, Primers and Sealers:
   a. Demandit
   b. HDP Paint
   c. Weatherlastic® Smooth
   d. Tuscan Glaze™
   e. Revyvit
   f. Color Prime
   g. Prymit®
   h. SealClear

PART III - EXECUTION

3.01 EXAMINATION

A. Prior to installation of the Outsulation SMD System, the contractor shall verify that the substrate:
   1. Is of a type listed in Section 1.04 C.1.
   2. Is flat within 6.4 mm (1/4 in) in a 1.2 m (4 ft) radius.
   3. Is sound, dry, clean, free of efflorescence, connections are tight, has no surface voids, projections, or other conditions that may interfere with the Outsulation SMD System installation or performance.

B. Prior to installation of the Outsulation SMD System, the architect or general contractor shall ensure that all needed flashings and other waterproofing details have been completed, if such completion is required prior to the Outsulation SMD System application. Additionally, the contractor shall ensure that:
   1. Metal roof flashing has been installed in accordance with manufacturer's requirements, Asphalt Roofing Manufacturers Association (ARMA) Standards and Dryvit Outsulation SMD System Installation Details, DS163, or as otherwise necessary to maintain a watertight envelope.
   2. Openings are flashed in accordance with the Outsulation SMD System Installation Details, DS163, or as otherwise necessary to prevent water penetration.
   3. Chimneys, balconies, and decks have been properly flashed.
   4. Windows, doors, etc. are installed and flashed per manufacturer's requirements and the Outsulation SMD System Installation Details, DS163.
   5. Sheet type membrane water-resistive barriers have been installed in a weatherboard fashion in accordance with building code and manufacturer's requirements.

C. Prior to the installation of the Outsulation SMD System, the contractor shall notify the general contractor and/or architect and/or owner of all discrepancies.

Reviewed for Code Compliance
Inspections Division
Approved with Conditions
Date: 10/31/17

3.02 PREPARATION

A. The Dryvit Outsulation SMD System materials shall be protected by permanent or temporary means from inclemen weather and other sources of damage prior to, during, and following application until completely dry.
B. Protect adjoining work and property during Outsulation SMD System installation.
C. When Dryvit Backstop NT is specified as the water-resistive barrier, the substrate shall be prepared as to be free of foreign materials such as oil, dust, dirt, form release agents, efflorescence, paint, wax, water repellants, moisture, frost, and any other condition that may inhibit adhesion.

3.03 INSTALLATION

A. The system shall be installed in accordance with the Dryvit Outsulation SMD System Application Instructions, DS123.
B. The overall minimum base coat thickness shall be sufficient to fully embed the mesh. The recommended method is to apply the base coat in two (2) passes.
C. Sealant shall not be applied to textured finishes or base coat surfaces. Dryvit Outsulation SMD System surfaces in contact with sealant shall be coated with Demandit or Color Prime.
D. High impact meshes shall be installed as specified at ground level, high traffic areas and other areas exposed to or susceptible to impact damage.

3.04 FIELD QUALITY CONTROL

A. The contractor shall be responsible for the proper application of the Outsulation SMD System materials.
B. Dryvit assumes no responsibility for on-site inspections or application of its products.
C. If required, the contractor shall certify in writing the quality of work performed relative to the substrate system, details, installation procedures, workmanship and the specific products used.
D. If required, the sealant contractor shall certify in writing that the sealant application is in accordance with the sealant manufacturer's and Dryvit's recommendations.

3.05 CLEANING

A. All excess Outsulation SMD System materials shall be removed from the job site by the contractor in accordance with contract provisions and as required by applicable law.
B. All surrounding areas, where the Dryvit Outsulation SMD System has been applied, shall be left free of debris and foreign substances resulting from the contractor's work.

3.06 PROTECTION

A. The Outsulation SMD System shall be protected from inclement weather and other sources of damage until dry and permanent protection in the form of flashings, sealants, etc. are installed.

Reviewed for Code Compliance
Inspections Division
Approved with Conditions
Date: 10/31/17

SECTION 07500
ROOFING AND FLASHING

PART 1 GENERAL

1.01 DESCRIPTION OF WORK

A. Fully adhered EPDM sheet roofing, tapered and flat roof insulation, elastomeric flashing, metal flashings, tapered edge strips and roof drains.

1.02 QUALITY ASSURANCE

A. Roofing contractor to be approved in writing by the membrane manufacturer. Contractor shall be able to substantiate that he has been trained by the membrane manufacturer.

B. Roofing and flashing workmanship to comply with industry standards. The National Roofing Contractors Association's (NRCA) ***ROOFING AND WATERPROOFING MANUAL*** along with ***ARCHITECTURAL SHEET METAL MANUAL*** as published by Sheet Metal and Air Conditioning Contractors National Association, Inc. (SMACNA) will be used to establish industry standards.

1.03 SUBMITTALS

A. Sample twenty (20) year watertight warranty for the EPDM membrane.

B. Sample twenty (20) year material warranty for the EPDM membrane.

C. Current EPDM membrane manufacturer's application specifications.

D. Shop drawings of each flashing condition, such as eave, curb, vent, wall termination, fascia and siding. Show securement of panels and clips, spacing, type and number of fasteners.

E. Provide costs for all materials separate from labor costs.

1.04 PRODUCT DELIVERY, STORAGE AND HANDLING

A. Deliver materials in their original, unopened containers, clearly labeled with manufacturer's name. All material to be stored in waterproof trailers or sheds, up on raised platforms and under lock and key until use. Do not use materials damaged in handling or storage. Replace damaged material with new material. Store adhesives between 60 and 80 degrees F. Should they be exposed to lower temperatures, restore to room temperature for three to five days prior to use.

1.05 WARRANTY

A. A twenty (20) year watertight warranty and twenty (20) year material warranty shall be issued by the EPDM membrane manufacturer.

B. The roofing contractor shall furnish the Owner with his personal two (2) year watertight warranty.

Reviewed for Code Compliance
Inspections Division
Approved with Conditions
Date: 10/31/17

PART 2 PRODUCTS

2.01 ROOF INSULATION

A. Roof insulation to be polyisocyanurate closed-cell foam core with manufacturer's standard facing laminated to both sides, complying with FS HH-I-1972/2, Class 1. The roof is to receive insulation to achieve slopes as necessary to drain water. Refer to the drawings and specifications. Both 1/4" per foot and 1/2" per foot tapered isocyanurate will be required. Roof insulation to be ISO 95+ by Firestone, H-Shield by Hunter Panels or approved equal.

B. Over all foam insulation, install one layer of 1/2" high density polyisocyanurate cover board. The high density cover board to be SecurShield HD Plus Polyiso by Carlisle, Isogard HD Cover Board by Firestone or approved equal.

C. Tapered edge strips to be 1-1/2" by 18" fiberboard. Use the tapered edge strips at the drains to create an additional sump for the drains.

2.02 MEMBRANE ROOF SYSTEM

A. Membrane roofing to be fully adhered .060" **LIGHT GREY EPDM** sheet roofing WITH A MIN S.R.I. OF 78 furnished in twenty five foot (25') wide (or wider) rolls by Firestone, Carlisle or Versico. **EPDM to be "Low Slope Fire Resistant" LSFR meeting U.L. - B. - FA.-38.** Roof membrane to be fully adhered to the 1/2" high density cover board.

B. Use the roof membrane for flashing of curbs and walls per the manufacturer's standard details. Use reinforced EPDM anchor strips to avoid splice joints at walls and edges.

C. Adhesives, sealants, thinner, cleaner and accessories to be furnished by the membrane manufacturer.

D. **Six inch (6") wide seam tape will be required for all field seams**.

2.03 ROOF DRAINS

A. New roof drains shall be Zurn ZC-100-DP furnished with cast iron domes and "Top-Set" deck plates. Insulate bottom side of roof drain.

2.04 METAL FLASHING

A. Edge strip to be formed using factory painted 24 gauge Galvalume coated steel. Color to be selected by the Architect from standard colors. Concealed clips to be formed using 24 gauge Galvalume coated steel.

2.05 FASTENERS

A. Use fasteners recommended by the membrane manufacturer to secure anchor bars and termination bars.

B. Fasteners used to secure roof insulation to the wood deck to be #14-10 Heavy Duty Roofing Fasteners with CR-10 coating, a minimum shank diameter of 0.170" and a thread diameter of 0.125". Pressure plates to be 3" diameter Galvalume plates. Screws and plates to be manufactured by Olympic Fasteners or approved equal. Length, size

Reviewed for Code Compliance
Inspections Division
Approved with Conditions
Date: 10/31/17

and accessories to be as required by the EPDM membrane manufacturer selected.

C. Use annular-ring hot dipped galvanized nails by W.H. Maze Co. to secure the edge strip.

PART 3 EXECUTION

3.01 PREPARATION OF SURFACES

A. Surfaces on which the roofing system is to be applied shall be clean, smooth, dry, free of fins, rot, sharp edges, loose and foreign materials, oil and grease.

3.02 TAPERED ROOF INSULATION

A. Insulation shall be tightly butted with joints not more than 1/8" in width. Stagger joints with those in layer below.

B. Fasten insulation to the roof deck with the appropriate screws and plates. Fastener quantity and layout must meet all requirements that may be imposed by the EPDM manufacturer to obtain their warranty. Secure HD cover board to roof insulation using low-rise foam supplied or approved by the EPDM manufacturer.

C. Stagger joints in one direction for each course. For multiple layers, stagger joints in both directions between courses leaving no gaps, allowing a complete thermal envelope to be formed.

D. Provide tapered units to suit drainage pattern indicated.

E. Do not install more insulation in a day than can be covered with membrane before end of day or before start of inclement weather.

3.03 ROOF MEMBRANE

A. Adhere the .060" EPDM membrane to the 1/2" cover board in strict accordance with the manufacturer's specifications.

B. **Six inch (6") wide seam tape will be required for all field seams**.

C. Install walkway pads for additional protection at locations known to receive frequent foot traffic.

3.04 FLASHING - - WALLS, PARAPETS, CURBS AND VENTS

A. Use the longest pieces of material which are practical. All flashing and terminations shall be done in accordance with the applicable manufacturer's details.

B. Care must be taken to set the elastomeric flashing so it does not bridge where there is a change of direction (i.e. where a parapet meets the roof deck). This can be accomplished by creasing the membrane into the angle change prior to adhering up the wall. Excess bridging will be cause for rejection and will be re-done at the contractor's expense.

C. Install termination bars at the top of all base flashing, fastening a minimum of 6" on center.

Reviewed for Code Compliance
Inspections Division
Approved with Conditions
Date: 10/31/17

3.05 METAL FLASHING

A. Bottom edge of metal edge strips to be secured with continuous cleats. Nail top flange with annular-ring nails, three inches (3") on center. Strip top flange with 6" pressure sensitive flashing.
B. Submit details of all proposed flashing conditions.

3.06 ROOF DRAINS

A. Install roof drains in accordance with the manufacturer's instructions. Review installation procedure with job-site inspector prior to installing drains.
B. Avoid target patches at the roof drains by installing new wood blocking, drains and tapered sumps prior to adhering the EPDM roof membrane.

3.07 TEMPORARY WATER CUT-OFF

A. Temporary water cut-offs are to be constructed at the end of each working day to protect the insulation, roofing, building and building interior from damage due to wind, snow and rain.
B. Temporary water cut-offs are to be detailed by the contractor and approved by the manufacturer and Owner.

3.08 CLEAN UP

A. Site clean-up shall be complete and to the satisfaction of the Owner.
B. All roofs, building, landscape and parking areas shall be cleaned of all trash, debris and dirt caused by or associated with this work.
C. Any areas stained, dirtied, discolored or otherwise damaged due to this work shall be cleaned, restored and replaced as required.
D. All debris shall be removed from the premises promptly and the construction area left clean daily.

3.09 INSPECTION AND TESTING

A. Any defect or noncompliance discovered by inspection shall be reported to the contractor who shall promptly remove any defective material from the site.
B. The Owner reserves the right to inspect the work or parts of it as he chooses. His failure to inspect the work in progress shall not relieve the contractor of the responsibility for properly executing the contracted work, nor shall it impair the Owner's right to reject deficiencies he may subsequently discover.

PART 4 JOB CONDITIONS

A. Roofing to be applied in dry weather.
B. Completed roof areas shall not be trafficked. The work shall be coordinated to prevent this situation by working toward the roof edges.
C. This project is subject to compliance with all requirements of the Occupational Safety and Health Administration (OSHA). All work on this project must meet the requirements of all applicable state and local codes, laws and ordinances.

Reviewed for Code Compliance
Inspections Division
Approved with Conditions
Date: 10/31/17

END OF SECTION

Reviewed for Code Compliance
Inspections Division
Approved with Conditions
Date: 10/31/17

SECTION 07620

SHEET METAL FLASHING AND TRIM

PART 1 GENERAL

1.01 SUMMARY

A. Section Includes:

1. Flashing at Roof, Windows, Doors, and other locations as shown on Drawings.

B. Related Sections:

1. Section 06100 - Rough Carpentry
2. Section 07200 - Thermal Protection: Air Infiltration Barriers
3. Section 07240 Exterior Insulation and Finish Systems (EIFS)
4. Section 07500 – Roofing and Flashing
5. Section 07720 – Roof Specialties: Roof Scuttle
6. Section 07900 – Joint Sealers
7. Section 08100 - Steel Doors and Frames
8. Section 08110 – Automatic Sliding Doors
9. Section 08410 - Aluminum Entrances and Storefronts
10. Section 08600 - PVC Windows
11. Section 15735 - Packaged Terminal Air-Conditioning Units
12. Section 15850 - Air Inlets & Outlets

1.02 REFERENCES

A. ASTM D1079 for Terminology Relating to Roofing, Waterproofing, and Bituminous Materials.

B. ASTM D1970 for Standard Specification for Self-Adhering Polymer Modified Bituminous Sheet Materials Used as Steep Roofing Underlayment for Ice Dam Protection.

C. ASTM D6221 for Standard Specification for Reinforced Bituminous Flashing Sheets for Roofing and Waterproofing.

1.03 SUBMITTALS

1. Submit Shop Drawings, color samples, product information, and samples clearly detailing shaping, jointing, length of sections, fastening, and installation details.
2. Manufacturer's standard color charts for selection purposes. Note: Match color at doors and windows.

1.04 QUALITY ASSURANCE

A. Installer Qualifications: Engage an experienced installer who has completed sheet metal flashing and trim work similar in material, design, and extent to that indicated for this project and with a record of successful in-service performance.

Reviewed for Code Compliance
Inspections Division
Approved with Conditions
Date: 10/31/17

B. Do not proceed with the installation of flashing and sheet metal work until curb a substrate construction, cant strips, blocking, reglets, and other construction to receive t work is completed.

C. Flashing and sheet metal shall be installed in accordance with Factory Mutual Engineering and Research requirements.

D. The installer must examine the substrate and the conditions under which flashing and sheet metal work is to be performed, and notify the Owner's representative in writing of unsatisfactory conditions. Do not proceed with the work until unsatisfactory conditions have been corrected in a manner acceptable to the installer.

1.05 PROJECT CONDITIONS

A. Existing Conditions:

1. Exercise care when working on or about roof surfaces to avoid damaging or puncturing membrane or flexible flashings.

2. Place plywood panels on roof surfaces adjacent to work of this Section and on access routes. Keep in place until completion of work.

B. Roofing and flashing shall not be applied during precipitation and shall not be started in the event there is a probability of precipitation during application. Metal faced flashing shall not be applied when ambient temperature is below 35 degrees F.

C. Do not install Membrane Flashing Systems on wet or damp surfaces. Surfaces should also be free from dirt, oils, lubricants or other debris that may inhibit adhesion of the flashing tape to the substrate. After precipitation, allow a minimum of 24 hours for drying before installing the flashing tape. For optimal performance, install at temperatures above 40 degrees F.

D. Coordinate Work of this Section with interfacing and adjoining Work for proper sequencing of each installation. Ensure best possible weather resistance, durability of Work, and protection of materials and finishes.

1.06 DELIVERY, STORAGE, AND HANDLING

A. Delivery: Deliver materials in manufacturer’s original, unopened, undamaged containers with identification labels intact.

B. Storage and Protection: Protect materials from rain and physical damage. Provide cover on top and on all sides, allowing for adequate ventilation. Store flashing where temperatures will not exceed 90 degrees F for extended periods. Store all products in a dry area away from high heat, flames or sparks.

C. Store Membrane Flashing System products in manufacturer’s unopened packaging until ready for installation and dispense the needed amounts of materials from the manufacturer box.

1.07 WARRANTY

A. Provide Owner with warranty stating that flashing material and metal wall fascia will properly shed water and protect roof and wall from physical damage for a minimum period of five years from date of Substantial Completion and the damage resulting from failure to provide above stated performances will be repaired to satisfaction of Owner at no additional cost.

Reviewed for Code Compliance
Inspections Division
Approved with Conditions
Date: 10/31/17

PART 2 PRODUCTS

2.01 ALUMINUM FLASHING AND SHEET METAL

A. Materials:

1. Aluminum Sheet: ASTM B209, Alloy 3003, Temper H14, AA-C22A41, minimum .032 inch thick (20 ga) sheet. 5-year Kynar Finish or Thermo-Setting acrylic enamel where exposed.
2. Fasteners: Concealed type; of same material as flashings; sized to suit application.
3. Size and shape as shown on Drawings.
4. Color: As approved by Owner.

2.02 MEMBRANE FLASHING

A. Wall Flashing:

1. Approved Manufacturers:
   a. "Perm-A-Barrier" wall flashing and "Perm-A-Barrier" primer as manufactured by W.R. Grace & Company (800-778-2880)
   b. “Nervastral H-D", by Rubber and Plastics Compound, Inc.
   c. "Wascoseal", by York Manufacturing, Inc. (800-551-2828)

B. Door & Window Opening Flashing System

1. Manufacturer:
   a. Approved Manufacturers:
      1) TYPAR MetroWrap by Fiberweb, 70 Old Hickory Boulevard, Old Hickory, TN 37138, www.typar.com
2. Elasticized Flexible Flashing Tape complying with the following:
   a. Face Material composition: Elasticized polyethylene laminate.
   b. Face color: White.
   c. Adhesive composition; Butyl adhesive containing non-halogen fire retardant additive
   d. Thickness: > 60 mils.
   e. Release liner: 2 part siliconized paper.
   f. Elastic Elongation, MD (length @ Full Extension/Length @ Relaxed): >230% @ 70 F.
   g. Dimension: 8 or 10 inch width.
3. Straight Polyethylene Laminate Flashing Tape complying with the following:
   a. Face Material composition: Polyethylene laminate
   b. Face color: White
   c. Adhesive compostion: Butyl adhesive containing fire retardant additive
   d. Thickness: 30 mils

Reviewed for Code Compliance
Inspections Division
Approved with Conditions
Date: 10/31/17

e. Release liner: 1 piece siliconized paper

f. Dimension: 4 inch width

4. Accessories:

a. Sealing Tape:

1) Material: Pressure sensitive, polypropylene substrate with acrylic based adhesive. Provides permanently elastic, nonsag, nontoxic, nonstaining tape, which is compatible with Typar Systems products.

2) Finish Product: Typar Contractor Tape.

b. Fasteners:

1) Material: 1" diameter plastic cap, nail length (1", 11/2", 2") for wood frame construction, or 2" diameter plastic cap with 1 5/8" drill point self tapping screw for metal stud applications, designed to withstand designed loads.

2) Finish Product Brand Name: TYPAR MetroWrap by Fiberweb.

c. Sealants: ASTM C 920, elastomeric polymer sealant, of type, grade, class, and use classifications required to seal joints and remain watertight and are compatible with Typar.

1) OSI Quad Pro-Series; solvent release kraton rubber sealant.

2) DAP DynaFlex 230™.

3) Other products as approved and recommended by the flashing tape manufacturer.

d. Primer:

1) 3M High Strength 90

2) Other products as approved and recommended by the flashing tape manufacturer.

C. Thru-Wall Flashing: See section 04200-4

2.03 MISCELLANEOUS MATERIALS AND ACCESSORIES

A. Bituminous Paint: Acid and alkali-resistant type; black color; FS TT-C-494 or SSPC-Paint 12 solvent type, nominally free of sulfur, compounded for 15-mil dry film thickness per coat.

B. Fasteners: Same metal as sheet metal flashing or other noncorrosive metal as recommended by sheet metal manufacturer. Match finish of exposed heads with material being fastened.

C. Elastomeric Sealant: Generic type recommended by sheet metal manufacturer and fabricator of components being sealed and complying with requirements for joint sealants as specified in Division 7 Section " Sealants".

D. Epoxy Seam Sealer: Two-part, noncorrosive, aluminum seam-cementing compound, recommended by aluminum manufacturer for exterior and interior nonmoving joints, including riveted joints.

Reviewed for Code Compliance
Inspections Division
Approved with Conditions
Date: 10/31/17

E. Adhesives: Type recommended by flashing sheet metal manufacturer for waterproof a weather-resistant seaming and adhesive application of flashing sheet metal.

F. Metal Accessories: Provide sheet metal clips, straps, anchoring devices, and similar accessory units as required for installation of work, matching or compatible with material being installed; noncorrosive; size and thickness required for performance.

2.04 FABRICATION, GENERAL

A. Sheet Metal Fabrication Standard: Fabricate sheet metal flashing and trim to comply with recommendations of SMACNA's "Architectural Sheet Metal Manual" that apply to the design, dimensions, metal, and other characteristics of the item indicated.

B. Comply with details shown to fabricate sheet metal flashing and trim that fit substrates and result in waterproof and weather-resistant performance once installed. Verify shapes and dimensions of surfaces to be covered before fabricating sheet metal.

C. Form exposed sheet metal work that is without excessive oil canning, buckling, and tool marks and that is true to line and levels indicated, with exposed edges folded back to form hems.

D. Seams: Fabricate nonmoving seams in aluminum with flat-lock seams. Form seams and seal with epoxy seam sealer. Rivet joints for additional strength.

E. Expansion Provisions: Comply with SMACNA standards. Space movement joints at maximum of 10 feet with no joints allowed within 24 inches of corner or intersection. Where lapped or bayonet-type expansion provisions in work cannot be used or would not be sufficiently weatherproof and waterproof, form expansion joints of intermeshing hooked flanges, not less than 1 inch deep, filled with mastic sealant (concealed within joints).

F. Sealed Joints: Form nonexpansion, but movable, joints in metal to accommodate elastomeric sealant to comply with SMACNA standards.

G. Separate metal from noncompatible metal or corrosive substrates by coating concealed surfaces at locations of contact with asphalt mastic or other permanent separation as recommended by manufacturer.

H. Conceal fasteners and expansion provisions where possible. Exposed fasteners are not allowed on faces of sheet metal exposed to public view.

I. Fabricate cleats and attachment devices from same material as sheet metal component being anchored or from compatible, noncorrosive metal recommended by sheet metal manufacturer.

1. Size: As recommended by SMACNA manual or sheet metal manufacturer for application, but never less than thickness of metal being secured.

2.05 FABRICATION - FLASHINGS

A. Form sections square true, and accurate to size, free from distortion and other defects detrimental to appearance or performance.

B. Form sections in maximum lengths. Make allowances for expansion at joints.

C. Seams are to be standing lock or batten type except corners. Fabricate corners minimum 18 inches mitered, soldered, or welded, and sealed as one piece.

D. Wipe and wash clean, soldered joints, to remove traces of flux immediately after soldering.

Reviewed for Code Compliance
Inspections Division
Approved with Conditions
Date: 10/31/17

E. Hem exposed edges of flashings on underside 1/2 inch.

F. Backpaint flashings with bituminous paint where expected to be in contact with cementitious materials or dissimilar metals.

PART 3 EXECUTION

3.01 INSTALLATION - GENERAL

A. Comply with manufacturer's instructions and recommendations for handling and installation of flashing and sheet metal work.

B. Performance: Coordinate the work with other work for the correct sequencing of items which make up the entire membrane or system of weatherproofing or waterproofing and rain drainage. It is required that the flashing and sheet metal work be permanently watertight, and not deteriorate in excess of manufacturer's published limitations.

C. Examine substrates and conditions under which sheet metal flashing and trim are to be installed and verify that work may properly commence. Do not proceed with installation until unsatisfactory conditions have been corrected.

3.02 INSTALLATION – SHEET METAL

A. General: Unless otherwise indicated, install sheet metal flashing and trim to comply with performance requirements, manufacturer's installation instructions, and SMACNA's "Architectural Sheet Metal Manual". Anchor units of work securely in place by methods indicated, providing for thermal expansion of metal units; conceal fasteners where possible, and set units true to line and level as indicated. Install work with laps, joints, and seams that will be permanently watertight and weatherproof.

B. Install exposed sheet metal work that is without excessive oil canning, buckling, and tool marks and that is true to line and levels indicated, with exposed edges folded back to form hems. Install sheet metal flashing and trim to fit substrates and to result in waterproof and weather-resistant performance. Verify shapes and dimensions of surfaces to be covered before fabricating sheet metal.

C. Sealed Joints: Form nonexpansion, but movable, joints in metal to accommodate elastomeric sealant to comply with SMACNA standards. Fill joint with sealant and form metal to completely conceal sealant.

1. Use joint adhesive for nonmoving joints specified not to be soldered.

D. Seams: Fabricate nonmoving seams in sheet metal with flat-lock seams. Tin edges to be seamed, form seams, and solder. Fabricate nonmoving seams in aluminum with flat-lock seams. Form seams and seal with epoxy seam sealer. Rivet joints for additional strength.

E. Separations: Separate metal from noncompatible metal or corrosive substrates by coating concealed surfaces, at locations of contact, with asphalt mastic or other permanent separation as recommended by manufacturer.

F. Counter-flash mechanical, electrical, and other items projecting through membrane roofing.

1. Pipes and Conduit Penetrations:

a. Flash with lead sheet extending flanges 9" from wall or pipe.

b. Extend flashing up pipe and turn down inside pipe a minimum 2".

Reviewed for Code Compliance
Inspections Division
Approved with Conditions
Date: 10/31/17

c. On tall pipe extend flashing a minimum of 9" up side of pipe and cover w galvanized malleable iron collar with draw band; seal top of collar against v pipe.

d. Set flanges on top of sheet roofing and strip in with a 12" wide section of roofing.

G. Roof-Drainage System: Install drainage items fabricated from sheet metal, with straps, adhesives, and anchors recommended by SMACNA's Manual or the item manufacturer, to drain roof in the most efficient manner. Coordinate roof-drain flashing installation with roof-drainage system installation. Spike type anchors will not be permitted. Coordinate flashing and sheet metal items for steep-sloped roofs with roofing installation.

3.03 INSTALLATION - WALL FLASHINGS

A. Membrane Wall Flashing:

1. Install at all windows, doors, and other locations as shown on Drawings in strict accordance with manufacturer's specifications to provide a watertight enclosure.

2. Substrate must be smooth, clean, dry and free of voids, spalled areas, loose substrate, loose nails, other sharp protrusions or other matter that will hinder the adhesion or regularity of the flashing tape installation. Clean loose dust or dirt from surface wherever flashing tape is to be applied by wiping with a clean dry cloth or brush.

3. Apply membrane over approved primer. Membrane wall flashings shall overlap one to two inches, as recommended by manufacturer. All membrane overlaps shall be firmly rolled immediately following installation to minimize bubbles caused by outgassing air vapor.

4. Apply a bead of sealant along top edge of flashing membrane and along seams and cuts as required.

B. Install window and door flashings AFTER installation of Air Infiltration Barrier as follows:

1. Prepare Air Infiltration Barrier for window or door installation.

2. Make a modified “I-cut” in the Air Infiltration Barrier.

3. Cut a flap above the rough opening to allow head flashing installation.

4. Fold side and bottom flaps into rough opening and secure. Flip head flap up and temporarily secure.

5. Cut Elasticized Flexible Flashing Tape at least 12” longer than width of rough opening sill.

6. Remove first piece of release paper, align edge of sill flashing with inside edge of sill, and adhere into rough opening across sill and up jambs (minimum 6”). Sill flashing should not wrap onto interior surface of framing.

7. Remove the second release paper.

8. Fan Elasticized Flexible Flashing Tape at bottom corners onto face of wall.

9. Firmly press sill flashing to insure full adhesion.

10. Secure edges of bottom corners with approved sealing tape or mechanical fasteners.

11. Apply continuous bead of sealant to wall or backside of window mounting flange across jambs and head. Do NOT apply sealant across sill.

Reviewed for Code Compliance
Inspections Division
Approved with Conditions
Date: 10/31/17

12. Install window or door in to opening.
13. Remove release paper and install Straight Polyethylene Laminate Flashing Tape jamb flashings overlapping entire mounting flange of both jambs. Extend jamb flashings 6-inches above top of rough opening to below bottom of sill flashing.
14. Remove release paper and install Straight Polyethylene Laminate Flashing Tape as head flashing overlapping entire mounting flange. Head flashing should extend beyond outside edges of both jamb flashings.
15. Flip head flap down over the head flashing.
16. Secure flap above window with approved sealing tape.
17. Install Sealant (using backer rod if necessary) to seal rear of window/door frame to rough opening.

C. Door Head Flashing:

1. Cut head flashing at least 12” longer than the arc length of Door Head.
2. Remove both release papers and install conforming around top of door, covering entire mounting flange. Head flashing should overlap jamb flashings at least 6”.
3. To facilitate installation to door heads, remove short lengths of release papers, begin installation, and repeat to work flashing into position and complete installation.
4. Secure outer edges of head flashing with approved sealing tape or mechanical fasteners.
5. Secure flap above door head with approved sealing tape.

D. Other Openings and Penetrations: Provide flashings for other openings as required to provide weathertight barrier. Install lapped components to direct water to exterior of building.

3.04 INSTALLATION - SOFFITS

A. Install soffits and accessories in accordance with manufacturer's standard published details and installation instructions.

B. Installation of materials specified within this Section shall be in accordance with the best practice, with all joint members true and plumb.

C. Provide for expansion and contraction. Do not drive nail heads tight against nailing lock. Nail size shall be in accordance with the manufacturer's printed instruction.

D. Provide sealant applications at all locations as recommended by the soffit manufacturer.

3.05 CLEANING AND PROTECTION

A. Clean exposed metal surfaces, removing substances that might cause corrosion of metal or deterioration of finishes.

B. Provide final protection and maintain conditions that ensure sheet metal flashing and trim work during construction is without damage or deterioration other than natural weathering at the time of Substantial Completion.

END OF SECTION

Reviewed for Code Compliance
Inspections Division
Approved with Conditions
Date: 10/31/17

SECTION 07720

TYPE F ROOF SCUTTLE

I. PART ONE - GENERAL

1.01 SUMMARY

A. Work included: Furnishing and installing factory fabricated roof scuttle

1.02 REFERENCES

A. American Society for Testing and Materials (ASTM), 100 Bar Harbor Drive, West Conshocken, PA 19428-2959; (610) 832-9585, fax (610) 832-9555
   1. ASTM A 36-93a: Standard Specification for Structural Steel

1.03 SUBMITTALS

A. Product Data: Provide manufacturer's product data for all materials in this specification.
B. Shop Drawings: Show profiles, accessories, location, and dimensions.
C. Samples: Manufacturer to provide upon request; sized to represent material adequately.
D. Contract Closeout: Roof scuttle manufacturer shall provide the manufacturer's Warranty prior to the contract closeout.

1.04 PRODUCT HANDLING

A. All materials shall be delivered in manufacturer's original packaging.
B. Store materials in a dry, protected, well-vented area. The contractor shall thoroughly inspect product upon receipt and report damaged material immediately to delivering carrier and note such damage on the carrier's freight bill of lading.
C. Remove protective wrapping immediately after installation .

1.05 SUBSTITUTIONS

A. Proposals for substitution products shall be accepted only from bidding contractors and not less than (10) working days before bid due date. Contractor guarantees that proposed substitution shall meet the performance and quality standards of this specification.

1.06 JOB CONDITIONS

A. Verify that other trades with related work are complete before installing roof scuttle(s).
B. Mounting surfaces shall be straight and secure; substrates shall be of proper width.
C. Refer to the construction documents, shop drawings, and manufacturer's installation instructions.
D. Coordinate installation with roof membrane and roof insulation manufacturer's instructions before starting.
E. Observe all appropriate OSHA safety guidelines for this work.

1.07 WARRANTY/GUARANTEE

A. Manufacturer's standard warranty: Materials shall be free of defects in material and workmanship for a period of five years from the date of purchase. Should a part fail to function in normal use within this period, manufacturer shall furnish a new part at no charge. Electrical motors, special finishes, and other special equipment (if applicable) shall be warranted separately by the manufacturers of those products.

Reviewed for Code Compliance
Inspections Division
Approved with Conditions
Date: 10/31/17

II. PART TWO – PRODUCTS

2.01 MANUFACTURER

A. The BILCO Company, P.O. Box 1203, New Haven, CT 06505, 1-203-934-6363, Fax: 1-203-933-8478, Web: www.bilco.com

2.02 ROOF SCUTTLE

A. Furnish and install where indicated on plans metal roof scuttle Type F, size width: 4'0" (1219mm) x length: 5'0" (1219mm). Length denotes hinge side. The roof scuttle shall be single leaf. The roof scuttle shall be pre-assembled from the manufacturer.

B. Performance characteristics:
   1. Cover shall be reinforced to support a minimum live load of 40 psf (195kg/m2) with a maximum deflection of 1/150th of the span or 20 psf wind uplift.
   2. Operation of the cover shall be smooth and easy with controlled operation throughout the entire arc of opening and closing.
   3. Operation of the cover shall not be affected by temperature.
   4. Entire scuttle shall be weather-tight with fully welded corner joints on cover and curb.

C. Cover: Shall be 11 gauge aluminum with a 3” (76mm) beaded flange with formed reinforcing members. Cover shall have a heavy extruded EPDM rubber gasket that is bonded to the cover interior to assure a continuous seal when compressed to the top surface of the curb.

D. Cover insulation: Shall be fiberglass of 1” (25.4mm) thickness, fully covered and protected by an 18 gauge aluminum liner.

E. Curb: Shall be 12” (305mm) in height and of14 gauge paint bond. The curb shall be formed with a 3-1/2” (89mm) flange with 7/16” (11.1mm) holes provided for securing to the roof deck. The curb shall be equipped with an integral metal cap-flashing of the same gauge and material as the curb, fully welded at the corners, that features the Posi-Flash® flashing system, including stamped tabs, 6” (153mm) on center, to be bent inward to hold single ply roofing membrane securely in place.

F. Curb insulation: Shall be rigid, high-density fiberboard of 1” (25.4mm) thickness on outside of Curb.

G. Lifting mechanisms: Manufacturer shall provide compression spring operators enclosed in telescopic tubes to provide, smooth, easy, and controlled cover operation throughout the entire arc of opening and closing. The upper tube shall be the outer tube to prevent accumulation of moisture, grit, and debris inside the lower tube assembly. The lower tube shall interlock with a flanged support shoe.

H. Hardware
   1. Heavy pintle hinges shall be provided
   2. Cover shall be equipped with a spring latch with interior and exterior turn handles
   3. Roof scuttle shall be equipped with interior and exterior padlock hasps.
   4. The latch strike shall be a stamped component bolted to the curb assembly.
   5. Cover shall automatically lock in the open position with a rigid hold open arm equipped with a 1” (25.4mm) diameter red vinyl grip handle to permit easy release for closing.
   6. Compression spring tubes shall be an anti-corrosive composite material and all other hardware shall be zinc plated and chromate sealed. Springs shall have an electro-coated acrylic finish for corrosion resistance.
   7. Cover hardware shall be bolted into heavy gauge channel reinforcing welded to the underside of the cover and concealed within the insulation space.

Reviewed for Code Compliance
Inspections Division
Approved with Conditions
Date: 10/31/17

I. Finishes: Factory finish shall be alkyd based red oxide primed steel.

III. PART THREE - EXECUTION

3.01 INSPECTION

A. Verify that roof scuttle installation will not disrupt other trades. Verify that the substrate is dry, clean, and free of foreign matter. Report and correct defects prior to any installation.

3.02 INSTALLATION

A. Submit product design drawings for review and approval to the architect before fabrication.

B. The installer shall check as-built conditions and verify the manufacturer’s roof scuttle details for accuracy to fit the application prior to fabrication. The installer shall comply with the roof scuttle Manufacturer's installation instructions.

C. The installer shall furnish mechanical fasteners consistent with the roof requirements.

END OF SECTION

Reviewed for Code Compliance
Inspections Division
Approved with Conditions
Date: 10/31/17

SECTION 07840
FIRESTOPPING

PART 1 - GENERAL

1.01 RELATED DOCUMENTS

A. Drawings and general provisions of Contract, including General and Supplementary Conditions and Division-1 Specification Section, apply to work specified in this section.

1.02 DEFINITIONS

A. Firestopping: Material or combination of materials used to retain integrity of fire-rated construction by maintaining an effective barrier against the spread of flame, smoke, and hot gases through penetrations in, or construction joints between, fire rated wall and floor assemblies.

1.03 GENERAL DESCRIPTION OF THE WORK OF THIS SECTION

Only tested firestop systems shall be used in specific locations as follows:

A. Penetrations for the passage of duct, cable, cable tray, conduit, piping, electrical busways and raceways through fire-rated vertical barriers (walls and partitions), horizontal barriers (floor/ceiling assemblies), and vertical service shaft walls and partitions.

B. Safing slot gaps between edge of floor slabs and curtain walls.

C. Openings between structurally separate sections of wall or floors.

D. Gaps between the top of walls and ceilings or roof assemblies.

E. Expansion joints in walls and floors.

F. Openings and penetrations in fire-rated partitions or walls containing fire doors.

G. Openings around structural members which penetrate floors or walls.

1.04 RELATED WORK OF OTHER SECTIONS

A. Coordinate work of this section with work of other sections as required to properly execute the work and as necessary to maintain satisfactory progress of the work of other sections, including:

1. Section 03 30 00 - Cast-In-Place Concrete
2. Section 04 20 00 - Unit Masonry
3. Section 07 90 00 - Joint Sealants
4. Section 09 20 00 - Plaster and Gypsum Board
5. Section 13 48 00 - Sound, Vibration and Seismic Control
6. Section 21 00 00 - Fire Suppression
7. Section 22 00 00 - Plumbing
8. Section 23 00 00 - Heating, Ventilating, and Air Conditioning (HVAC)
9. Section 26 00 00 - Electrical
10. Section 26 00 00 – Communications

Reviewed for Code Compliance
Inspections Division
Approved with Conditions
Date: 10/31/17

1.05 REFERENCES

A. Test Requirements: ASTM E 814, "Standard Method of Fire Tests of Through Penetration Fire Stops"

B. Test Requirements: UL 1479, “Fire Tests of Through-Penetration Firestops”

C. Test Requirements: UL 2079, “Tests for Fire Resistance of Building Joint Systems”

D. Underwriters Laboratories (UL) of Northbrook, IL publishes tested systems in their "FIRE RESISTANCE DIRECTORY" that is updated annually.

1. UL Fire Resistance Directory:
   a. Firestop Devices (XHJI)
   b. Fire Resistance Ratings (BXRH)
   c. Through-Penetration Firestop Systems (XHEZ)
   d. Fill, Voids, or Cavity Material (XHHW)
   e. Forming Materials (XHKU)
   f. Joint Systems (XHBN)
   g. Perimeter Fire Containment Systems (XHDG)

2. Alternate Systems: “Omega Point Laboratories Directory” (updated annually).

E. Test Requirements: ASTM E 1966, “Standard Test Method for Fire Resistive Joint Systems”

F. Test Requirements: ASTM E 2307, “Standard Test Method for Determining Fire Resistance of Perimeter Fire Barrier Systems Using Intermediate-Scale, Multi-story Test Apparatus”

G. Inspection Requirements: ASTM E 2174, “Standard Practice for On-site Inspection of Installed Fire Stops”

H. ASTM E 84, “Standard Test Method for Surface Burning Characteristics of Building Materials”

I. International Firestop Council Guidelines for Evaluating Firestop Systems Engineering Judgments

J. International Building Code (IBC 2009)

K. NFPA 101 - Life Safety Code

L. NFPA 70 - National Electric Code

1.06 QUALITY ASSURANCE

A. Fire-Test-Response Characteristics: Provide through-penetration fire stop systems and fire-resistive joint systems that comply with specified requirements of tested systems.

B. Fire stop System installation must meet requirements of ASTM E 814, UL 1479 or UL 2079 tested assemblies that provide a fire rating equal to that of construction being penetrated.

C. Proposed fire stop materials and methods shall conform to applicable governing codes having local jurisdiction.

Reviewed for Code Compliance
Inspections Division
Approved with Conditions
Date: 10/31/17

D. Fire stop Systems do not reestablish the structural integrity of load bearing partitions/assemblies, or support live loads and traffic. Installer shall consult the structural engineer prior to penetrating any load bearing assembly.

E. For those firestop applications that exist for which no qualified tested system is available through a manufacturer, an engineering judgment derived from similar qualified tested system designs or other tests will be submitted to local authorities having jurisdiction for their review and approval prior to installation. Engineering judgment documents must follow requirements set forth by the International Firestop Council.

1.07 SUBMITTALS

A. Submit Product Data: Manufacturer's specifications and technical data for each material including the composition and limitations, documentation of qualified tested firestop systems to be used and manufacturer's installation instructions to comply with Section 01 30 00.

B. Manufacturer's engineering judgment identification number and document details when no qualified tested system is available for an application. Engineering judgment must include both project name and contractor's name who will install firestop system as described in document.

C. Submit material safety data sheets provided with product delivered to job-site.

1.08 INSTALLER QUALIFICATIONS

A. Engage an experienced Installer who is certified, licensed, or otherwise qualified by the firestopping manufacturer as having been provided the necessary training to install manufacturer's products per specified requirements. A supplier's willingness to sell its firestopping products to the Contractor or to an Installer engaged by the Contractor does not in itself confer qualification on the buyer.

B. Installation Responsibility: assign installation of through-penetration firestop systems and fire-resistive joint systems in Project to a single sole source firestop specialty contractor.

C. The work is to be installed by a contractor with at least one of the following qualifications:

FM 4991 Approved Contractor
UL Approved Contractor
Hilti Accredited Fire Stop Specialty Contractor

1.09 DELIVERY, STORAGE, AND HANDLING

A. Deliver materials undamaged in manufacturer's clearly labeled, unopened containers, identified with brand, type, and UL label where applicable.

B. Coordinate delivery of materials with scheduled installation date to allow minimum storage time at job-site.

C. Store materials under cover and protect from weather and damage in compliance with manufacturer's requirements, including temperature restrictions.

D. Comply with recommended procedures, precautions or remedies described in material safety data sheets as applicable.

E. Do not use damaged or expired materials.

Reviewed for Code Compliance
Inspections Division
Approved with Conditions
Date: 10/31/17

1.10 PROJECT CONDITIONS

A. Do not use materials that contain flammable solvents.

B. Schedule installation of firestopping after completion of penetrating item installation but prior to covering or concealing of openings.

C. Verify existing conditions and substrates before starting work. Correct unsatisfactory conditions before proceeding.

D. Weather conditions: Do not proceed with installation of firestop materials when temperatures exceed the manufacturer's recommended limitations for installation printed on product label and product data sheet.

E. During installation, provide masking and drop cloths to prevent firestopping materials from contaminating any adjacent surfaces.

PART 2 - PRODUCTS

2.01 FIRESTOPPING - GENERAL

A. Provide firestopping composed of components that are compatible with each other, the substrates forming openings, and the items, if any, penetrating the firestopping under conditions of service and application, as demonstrated by the firestopping manufacturer based on testing and field experience.

B. Provide components for each firestopping system that are needed to install fill material. Use only components specified by the firestopping manufacturer and approved by the qualified testing agency for the designated fire-resistance-rated systems.

C. Penetrations in Fire Resistance Rated Walls: Provide firestopping with ratings determined in accordance with UL 1479 or ASTM E 814.

1. F-Rating: Not less than the fire-resistance rating of the wall construction being penetrated.

D. Penetrations in Horizontal Assemblies: Provide firestopping with ratings determined in accordance with UL 1479 or ASTM E 814.

1. F-Rating: Minimum of 1-hour rating, but not less than the fire-resistance rating of the floor construction being penetrated.
2. T-Rating: when penetrant is located outside of a wall cavity, minimum of 1-hour rating, but not less than the fire-resistance rating of the floor construction being penetrated.
3. W-Rating: Class 1 rating in accordance with water leakage test per UL 1479.

E. Penetrations in Smoke Barriers: Provide firestopping with ratings determined in accordance with UL 1479 or ASTM E 814.

1. L-Rating: Not exceeding 5.0 cfm/sq. ft. of penetration opening at both ambient and elevated temperatures.

F. Mold Resistance: Provide penetration firestoppping with mold and mildew resistance rating of 0 as determined by ASTM G21.

Reviewed for Code Compliance
Inspections Division
Approved with Conditions
Date: 10/31/17

G. Firestopping Materials are either “cast-in-place” (integral with concrete placement) or “pos installed.” Provide cast-in-place firestop devices prior to concrete placement.

2.02 ACCEPTABLE MANUFACTURERS

A. Subject to compliance with through penetration firestop systems (XHEZ), joint systems (XHBN), and perimeter firestop systems (XHDG) listed in Volume 2 of the UL Fire Resistance Directory; provide products of the following manufacturers as identified below:

1. Hilti, Inc., Tulsa, Oklahoma
   800-879-8000
   www.us.hilti.com
   Chris Allington 508-509-8316
   Chris.allington@hilti.com

2. Substitution requests shall be considered in accordance with contract provisions.

2.03 MATERIALS

A. Use only firestop products that have been UL 1479, ASTM E 814 or UL 2079 tested for specific fire-rated construction conditions conforming to construction assembly type, penetrating item type, annular space requirements, and fire-rating involved for each separate instance.

B. Pre-installed firestop devices for use with noncombustible and combustible pipes (closed and open systems), conduit, and/or cable bundles penetrating concrete floors and/or gypsum walls, the following products are acceptable:

1. Hilti Cast-In Place Firestop Device (CP 680-P)
   a. Add Aerator Adaptor when used in conjunction with aerator system.
2. Hilti Tub Box Kit (CP 681) for use with tub installations.
3. Hilti Cast-In Place Firestop Device (CP 680-M) for use with noncombustible penetrants.
4. Hilti Speed Sleeve (CP 653) for use with cable penetrations.
5. Hilti Firestop Drop-In Device (CFS-DID) for use with noncombustible and combustible penetrants.
6. Hilti Firestop Block (CFS-BL)

C. Sealants, caulking materials, or foams for use with non-combustible items including steel pipe, copper pipe, rigid steel conduit and electrical metallic tubing (EMT), the following products are acceptable:

1. Hilti Intumescent Firestop Sealant (FS-ONE)
2. Hilti Self-leveling Firestop Sealant (CP 604)
3. Hilti Fire Foam (CP 620)
4. Hilti Flexible Firestop Sealant (CP 606)
5. Hilti Elastomeric Firestop Sealant (CP 601S)

D. Sealants or caulking materials for use with sheet metal ducts, the following products are acceptable:

1. Hilti Elastomeric Firestop Sealant (CP 601S)
2. Hilti Flexible Firestop Sealant (CP 606)
3. Hilti Intumescent Firestop Sealant (FS-ONE)

Reviewed for Code Compliance
Inspections Division
Approved with Conditions
Date: 10/31/17

E. Sealants, caulking or spray materials for use with fire-rated construction joints and other gaps, the following products are acceptable:

1. Hilti Firestop Joint Spray (CFS-SP WB)
2. Hilti Elastomeric Firestop Sealant (CP 601S)
3. Hilti Flexible Firestop Sealant (CP 606)
4. Hilti Self-leveling Firestop Sealant (CP 604)

F. Pre-formed mineral wool designed to fit flutes of metal profile deck and gap between top of wall and metal profile deck; as a backer for spray material.

1. Hilti Speed Plugs (CP 777)
2. Hilti Speed Strips (CP 767)

G. Intumescent sealants, caulking materials for use with combustible items (penetrants consumed by high heat and flame) including insulated metal pipe, PVC jacketed, flexible cable or cable bundles and plastic pipe, the following products are acceptable:

1. Hilti Intumescent Firestop Sealant (FS-ONE)

H. Foams, intumescent sealants, or caulking materials for use with flexible cable or cable bundles, the following products are acceptable:

1. Hilti Intumescent Firestop Sealant (FS-ONE)
2. Hilti Fire Foam (CP 620)
3. Hilti Elastomeric Firestop Sealant (CP 601S)
4. Hilti Flexible Firestop Sealant (CP 606)

I. Non-curing, re-penetrable intumescent putty or foam materials for use with flexible cable or cable bundles, the following products are acceptable:

1. Hilti Firestop Putty Stick (CP 618)
2. Hilti Firestop Plug (CFS-PL)

J. Wall opening protective materials for use with U.L. listed metallic and specified nonmetallic outlet boxes, the following products are acceptable:

1. Hilti Firestop Putty Pad (CP 617)
2. Hilti Firestop Box Insert

K. Firestop collar or wrap devices attached to assembly around combustible plastic pipe (closed and open piping systems), the following products are acceptable:

1. Hilti Firestop Collar (CP 643N)
2. Hilti Firestop Collar (CP 644)
3. Hilti Wrap Strips (CP 648E/648S)

L. Materials used for large openings and complex penetrations made to accommodate cable trays and bundles, multiple steel and copper pipes, electrical busways in raceways, the following products are acceptable:

1. Hilti Firestop Mortar (CP 637)
2. Hilti Firestop Block (CFS-BL)
3. Hilti Fire Foam (CP 620)
4. Hilti Firestop Board (CP 675T)

Reviewed for Code Compliance
Inspections Division
Approved with Conditions
Date: 10/31/17

M. Non curing, re-penetrable materials used for large size/complex penetrations made to accommodate cable trays and bundles, multiple steel and copper pipes, electrical busways in raceways, the following products are acceptable:

1. Hilti Firestop Block (CFS-BL)
2. Hilti Firestop Board (CP 675T)

N. Sealants or caulking materials used for openings between structurally separate sections of wall and floors, the following products are acceptable:

1. Hilti Firestop Joint Spray (CFS-SP WB)
2. Hilti Elastomeric Firestop Sealant (CP 601S)
3. Hilti Flexible Firestop Sealant (CP 606)
4. Hilti Self-leveling Firestop Sealant (CP 604)

O. For blank openings made in fire-rated wall or floor assemblies, where future penetration of pipes, conduits, or cables is expected, the following products are acceptable:

1. Hilti CFS-BL Firestop Block
2. Hilti CFS-PL Firestop Plug

P. Provide a firestop system with a "F" Rating as determined by UL 1479 or ASTM E814 which is equal to the time rating of construction being penetrated.

Q. Provide a firestop system with an Assembly Rating as determined by UL 2079 which is equal to the time rating of construction joint assembly.

PART 3 - EXECUTION

3.01 PREPARATION

A. Verification of Conditions: Examine areas and conditions under which work is to be performed and identify conditions detrimental to proper or timely completion.

1. Verify penetrations are properly sized and in suitable condition for application of materials.
2. Surfaces to which firestop materials will be applied shall be free of dirt, grease, oil, rust, laitance, release agents, water repellents, and any other substances that may affect proper adhesion.
3. Provide masking and temporary covering to prevent soiling of adjacent surfaces by firestopping materials.
4. Comply with manufacturer's recommendations for temperature and humidity conditions before, during and after installation of firestopping.
5. Do not proceed until unsatisfactory conditions have been corrected.

3.02 COORDINATION

A. Coordinate construction of openings, penetrations and construction joints to ensure that the fire stop systems are installed according to specified requirements.

B. Coordinate sizing of sleeves, openings, core-drilled holes, or cut openings to accommodate through-penetration fire stop systems. Coordinate construction and sizing of joints to ensure that fire-resistive joint systems are installed according to specified requirements.

Reviewed for Code Compliance
Inspections Division
Approved with Conditions
Date: 10/31/17

C. Coordinate fire stopping with other trades so that obstructions are not placed in the way prior to the installation of the fire stop systems.

D. Do not cover up through-penetration fire stop and joint system installations that will become Concealed behind other construction until each installation has been examined by the building inspector.

3.03 INSTALLATION

A. Regulatory Requirements: Install firestop materials in accordance with UL Fire Resistance Directory or Omega Point Laboratories Directory.

B. Manufacturer's Instructions: Comply with manufacturer's instructions for installation of through-penetration and construction joint materials.

1. Seal all holes or voids made by penetrations to ensure an air and water resistant seal.
2. Consult with mechanical engineer, project manager, and damper manufacturer prior to installation of UL firestop systems that might hamper the performance of fire dampers as it pertains to duct work.
3. Protect materials from damage on surfaces subjected to traffic.

3.04 FIELD QUALITY CONTROL

A. Examine sealed penetration areas to ensure proper installation before concealing or enclosing areas.

B. Keep areas of work accessible until inspection by applicable code authorities.

C. Inspection of through-penetration firestopping shall be performed in accordance with ASTM E 2174, “Standard Practice for On-Site Inspection of Installed Fire Stops” or other recognized standard.

D. Perform under this section patching and repairing of firestopping caused by cutting or penetrating of existing firestop systems already installed by other trades.

E. Manufacturer’s Field Services: During Installation, provide periodic destructive testing inspections to assure proper installation/application. After installation is complete, submit findings in writing indicating whether or not the installation of the tested system identified was installed correctly.

3.05 IDENTIFICATION & DOCUMENTATION

A. The firestop contractor is to supply documentation for each single application addressed. This documentation is to identify each penetration and joint location on the entire project.

A.1 The Documentation Form for through penetrations is to include:

1. A Sequential Location Number
2. The Project Name
3. Date of Installation
4. Detailed description of the penetrations location
5. Tested System or Engineered Judgment Number
6. Type of assembly penetrated
7. A detailed description of the size and type of penetrating item
8. Size of opening

Reviewed for Code Compliance
Inspections Division
Approved with Conditions
Date: 10/31/17

9. Number of sides of assemblies addressed
10. Hourly rating to be achieved
11. Installers Name

A.2 The Documentation Form for Construction Joints is to include:

1. A Sequential Location Number
2. The Project Name
3. Date of Installation
4. Detailed description of the Construction Joints location
5. Tested System or Engineered Judgment Number
6. Type of Construction Joint
7. The Width of the Joint
8. The Lineal Footage of the Joint
9. Number of sides addressed
10. Hourly rating to be achieved
11. Installers Name

B. Copies of these documents are to be provided to the general contractor at the completion of the project.

C. Identify through-penetration firestop systems with pressure-sensitive, self-adhesive, preprinted vinyl labels. Attach labels permanently to surfaces of penetrated construction on both sides of each firestop system installation where labels will be visible to anyone seeking to remove penetrating items or firestop systems. Include the following information on labels:

1. The words: "Warning -Through Penetration Firestop System-Do Not Disturb. Notify Building Management of Any Damage."
2. Contractor's Name, address, and phone number.
3. Through-Penetration firestop system designation of applicable testing and inspecting agency.
4. Date of Installation.
5. Through-Penetration firestop system manufacturer's name.
6. Installer's Name.

3.06 ADJUSTING AND CLEANING

A. Remove equipment, materials and debris, leaving area in undamaged, clean condition.

B. Clean all surfaces adjacent to sealed holes and joints to be free of excess firestop materials and soiling as work progresses.

3.07 LABOR USE TO INSTALL FIRESTOP SYSTEMS

A. To ensure complete harmony on the project site, the installation of each scope of work is to be performed jurisdictionally correct per existing trade agreements.

END OF SECTION

Reviewed for Code Compliance
Inspections Division
Approved with Conditions
Date: 10/31/17

SECTION 07920

JOINT SEALANTS

PART 1 GENERAL

1.1 SUMMARY

A. Section Includes:
1. Exterior polyurethane sealants.
2. Exterior and interior polyurethane traffic sealants.
3. Interior polyurethane sealants.
4. Interior latex sealants.
5. Interior sanitary silicone sealants.
6. Exterior and interior water immersed polyurethane sealants.
7. Metal lap joint sealants.
8. Threshold and sheet metal bedding sealants.
9. Joint accessories.

B. Related Sections:
1. Section 08800 – Glazing: Glazing sealants and protective glazing systems.
2. 01811 Sustainable Design Requirements

1.2 REFERENCES

A. ASTM International Inc.
1. ASTM C 510 - Standard Test Method for Staining and Color Change of Single- or Multicomponent Joint Sealants.
2. ASTM C 719 - Standard Test Method for Adhesion and Cohesion of Elastomeric Joint Sealants Under Cyclic Movement (Hockman Cycle).
3. ASTM C 794 - Standard Test Method for Adhesion-in-Peel of Elastomeric Joint Sealants.
4. ASTM C834 - Standard Specification for Latex Sealants.
5. ASTM C 920 - Standard Specification for Elastomeric Joint Sealants.
8. ASTM C 1193 - Standard Guide for Use of Joint Sealants.
9. ASTM C 1248 - Standard Test Method for Staining of Porous Substrate by Joint Sealants.
10. ASTM C 1311 - Standard Specification for Solvent Release Sealants.
11. ASTM D 2203 - Standard Test Method for Staining from Sealants.

1.3 SUBMITTALS

A. Shop Drawings:
1. Submit details to show installation and interface between sealants and adjacent work.

Reviewed for Code Compliance
Inspections Division
Approved with Conditions
Date: 10/31/17

B. Product Data:
   1. Materials list of items proposed to be provided under this Section;
   2. Manufacturer's specifications and other data needed to prove compliance with the specified requirements;

C. Samples:
   1. Submit color charts for each sealant type for initial selection.
   2. Submit standard cured color samples for each sealant type illustrating selected colors.

D. Manufacturer's Installation Instructions:
   1. Submit manufacturer’s published installation procedures.
   2. Include instructions for completing sealant intersections when different materials are joined.
   3. Include instructions for removing existing sealants and preparing joints for new sealant.

E. Manufacturer's Certificate:
   1. Certify products are suitable for intended use and products meet or exceed specified requirements.
   2. Certify applicator is approved by manufacturer.

F. Qualifications Data:
   1. Submit applicator's qualifications, including reference projects of similar scope and complexity, with current phone numbers and contact names of architects and owners for verification.

G. Manufacturer's Field Reports:
   1. Indicate time present at project site.
   2. Include observations, indicate compliance with manufacturer's installation instructions, and supplemental instructions provided to installers.

1.4 CLOSEOUT SUBMITTALS

A. Operation and Maintenance Data:
   1. Submit recommended inspection intervals.
   2. Submit instructions for repairing and replacing failed sealant joints.

1.5 QUALITY ASSURANCE

A. Perform work in accordance with the following:
   1. Building Joints: ASTM C 1193.

B. Field Pre-Construction Testing:
   1. Test each elastomeric sealant and joint substrate in accordance with the following, before beginning work of this section:
      a. Install sealants in field samples using joint preparation methods determined by laboratory pre-construction testing.

Reviewed for Code Compliance
Inspections Division
Approved with Conditions
Date: 10/31/17

b. Remove existing sealant, clean joint, and install new sealant using manufacturer's recommended joint preparation methods.
c. Install field-test joints in location as approved by Architect.
d. Test Method: Manufacturer's standard field adhesion test to verify joint preparation and primer required to obtain optimum adhesion of sealants to joint substrate.
e. When test indicates sealant adhesion failure, modify joint preparation, primer, or both and retest until joint passes sealant adhesion test.

1.6 QUALIFICATIONS

A. Manufacturer: Company specializing in manufacturing products specified in this section with minimum ten years documented experience.

B. Applicator Qualifications:
1. Company specializing in performing work of this section with minimum three years documented experience, minimum three successfully completed projects of similar scope and complexity, and approved by manufacturer.
2. Designate one individual as project foreman who shall be on site at all times during installation.

1.7 MOCKUP

A. Install sealants in mockups specified in other sections including sealant and joint accessories to illustrate installation quality and color.

B. Incorporate accepted mockup as part of Work.
1. Repair seal joint mockups used for field adhesion testing.

1.8 DELIVERY, STORAGE, AND HANDLING

A. Accept materials on site in manufacturers unopened original packaging. Inspect for damage.

B. Store primers and sealants in cool dry location with ambient temperature range of 60 to 80 degrees F.

1.9 ENVIRONMENTAL REQUIREMENTS

A. Do not install primers or sealants when atmospheric temperatures or joint surface temperatures are less than 40 degrees F.

1.10 SCHEDULING

A. Schedule work so waterproofing, water repellents and preservative finishes are installed after sealants, unless sealant manufacturer approves otherwise in writing.

B. Ensure sealants are cured before covering with other materials.

Reviewed for Code Compliance
Inspections Division
Approved with Conditions
Date: 10/31/17

1.11 WARRANTY

A. Submit signed copies of the following warranties against adhesive and cohesive failure of sealant and against infiltration of water and air through sealed joint for period of 3 years from date of completion.
   1. Manufacturer's standard warranty covering sealant materials.
   2. Applicator's standard warranty covering workmanship.

PART 2 PRODUCTS

2.1 MANUFACTURERS

A. Tremco Sealant/Weatherproofing Division of RPM International, Inc.

B. Or equal

2.2 URETHANE SEALANTS

A. Multi-Component Urethane: two component, chemical curing, nonstaining, nonbleeding, color as selected.
   1. Dymeric 240
   2. Dymeric 240FC
   3. Or equal

B. Single Component Urethane: single component, moisture curing, nonstaining, non-bleeding, color as selected.
   1. Dymonic FC
   2. Or equal

2.3 SILICONE SEALANTS

A. Multi-Component Silicone: ASTM C920, Type M, Grade NS, Class 50; Uses NT, M, G, A and O: multi-component, neutral curing, nonstaining, nonbleeding, color as selected
   1. Spectrem 4-TS.
   2. Or equal

B. Single Component Silicone: ASTM C920, Type S, Grade NS, ; Uses NT, M, G, A and O: single component, nonstaining, nonbleeding, color as selected.
   1. Spectrem 1.
   2. Spectrem 2.
   3. Spectrem 3.
   4. Or equal

C. Single Component Silicone: ASTM C920, Type S, Grade NS, Class 25; Uses NT, G, A and O: single component, nonstaining, nonbleeding, color as selected.
   1. Proglaze.
   2. Tremsil 200.

Reviewed for Code Compliance
Inspections Division
Approved with Conditions
Date: 10/31/17

2.4 OTHER SEALANTS

A. Latex Sealant: ASTM C 834; single component, solvent curing, nonstaining, nonbleeding, nonsagging; color as selected.
   1. Tremflex 834.

B. Synthetic Rubber Sealant:
   1. Acoustical Sealant.

C. Butyl Sealant: ASTM C 1311, butyl or polyisobutylene, single component, nondrying, non-skinning, non-curing.
   1. Butyl Sealant.

2.5 ACCESSORIES

A. Joint Cleaner: Non-corrosive and non-staining type, recommended by sealant manufacturer; compatible with joint forming materials.

B. Primer: Non-staining type, recommended by sealant manufacturer to suit application.

C. Joint Backing: Round foam rod compatible with sealant; oversized 25 to 50 percent larger than joint width; recommended by sealant manufacturer to suit application

D. Bond Breaker: Pressure sensitive tape recommended by sealant manufacturer to suit application.

E. Masking tape: Non-staining, non-absorbent tape product compatible with joint sealants and adjacent joint surfaces.

PART 3 EXECUTION

3.1 EXAMINATION

A. Verify substrate surfaces and joint openings are ready to receive work.
   1. Verify joint surfaces are clean and dry.
   2. Ensure concrete surfaces are fully cured.

B. Report unsatisfactory conditions in writing to the Architect;

C. Do not proceed until unsatisfactory conditions are corrected.

3.2 PREPARATION

A. Prepare joints in accordance with ASTM C 1193 and manufacturer's instructions.

B. Clean joint surfaces to remove dirt, dust, oils, wax, paints, and other contamination capable of affecting primer and sealant bond.

Reviewed for Code Compliance
Inspections Division
Approved with Conditions
Date: 10/31/17

1. Clean concrete joint surfaces to remove curing agents and form release agent

C. Protect elements surrounding the Work of this section from damage or disfiguration. Apply masking tape to adjacent surfaces when required to prevent damage to finishes from sealant installation.

3.3 EXISTING WORK

A. Mechanically remove existing sealant.

B. Clean joint surfaces of residual sealant and other contaminates capable of affecting sealant bond to joint surface.

C. Allow joint surfaces to dry before installing new sealants.

3.4 SEALANT INSTALLATION

A. INTERIOR CAULKING shall be applied to seal all penetrations through top plates of interior walls, (due to electrical or plumbing), and at tubs, showers, counter tops, bottom of party walls GWB, and other as shown on Drawings.

B. ALL POTENTIAL INFILTRATION cracks & joints to be caulked. Caulking shall be done only by workmen who are thoroughly experienced in this work. Exterior caulking shall be applied around windows, doors, vents, utilities, and any other infiltration "crack".

C. IN GENERAL see Drawings for any additional applications. Joints and spaces to be caulked shall be dry and free from dust. Finished caulking "bead" shall be neat and smooth, free of gaps and sags and run continuously. Complete all caulking work and allow to stand for the manufacturer's recommended time period before painting. Prime if required before finish coat of paint is applied.

D. Install primer and sealants in accordance with ASTM C 1193 and manufacturer's instructions.

E. Caulking shall apply to sealing of joints less than 3/4 inches in width. Any joint in excess of this width shall be filled with a low-expansion closed cell foam insulation or as directed by Architect.

F. Install joint backing to maintain the following joint ratios:
1. Joints up to 1/2 inch Wide: 1:1 width to depth ratio.
2. Joints Greater than 1/2 inch Wide: 2:1 width to depth ratio; maximum 1/2 inch joint depth.

G. Install bond breaker where joint backing is not used.

H. Apply primer where required for sealant adhesion.

I. Install sealants immediately after joint preparation.

Reviewed for Code Compliance
Inspections Division
Approved with Conditions
Date: 10/31/17

J. Install sealant free of air pockets, foreign embedded matter, ridges, and sags.

K. Tool exposed joint surface concave.

L. Building Envelope:

1. Gaskets or sill seals under mud sills along foundation walls.
2. Seal first floor band joists to the adjoining mud sills and plywood decking using adhesive or caulk. Use construction adhesive or caulking between multiple sill plates.
3. Seal any band joists between upper floors to the adjoining top plate and plywood decking.
4. Use construction adhesive or caulking between multiple tops plates.
5. Seal bottom plates of exterior walls to the sub-floor with construction adhesive or caulking.
6. Window frames and doorjambs must be sealed to their rough openings using low expansion foam, backer rod or caulk but NOT fiberglass.
7. All penetrations through building must be carefully sealed. Typical Penetrations include chimney, duct and plumbing chases and penetrations of pipes and wires through the top plates of top story walls. It is particularly important to seal all possible air paths to the attic.
8. Electrical boxes on exterior walls and ceilings should either be airs-sealed or placed in airtight.

3.5 MANUFACTURER'S FIELD SERVICES

A. Require sealant manufacturer to be present at project site to:
1. Observe sealant mockup installation and to issue reports of observations.
2. Conduct field pre-construction testing.

3.6 CLEANING

A. Remove masking tape.

B. Clean adjacent surfaces soiled by sealant installation.

3.7 SCHEDULE – SEALANT JOINTS

A. Exterior Sealant Joint [Type A]:
1. Applications:
a. Control and expansion joints in cast-in-place concrete.
b. Joints between architectural precast concrete units.
c. Control and expansion joints in unit masonry.
d. Control and expansion joints in stone masonry.
e. Butt joints between metal panels.
f. Joints between different materials listed above.
g. Perimeter joints between materials listed above and frames of doors, windows, storefronts, louvers and similar openings.

Reviewed for Code Compliance
Inspections Division
Approved with Conditions
Date: 10/31/17

h. Control and expansion joints in soffits and overhead surfaces.
i. Other exterior joints in vertical surfaces and non-traffic horizontal surfaces for which no other sealant is specified.
j. Or equal

2. Multi-Component Urethane Sealants:
   a. Dymeric 240/240FC.
   b. Vulkem 227.
   c. Or equal
3. Single Component Urethane Sealants:
   a. Dymonic FC.
   b. Dymonic.
   c. Vulkem 116.
   d. Or equal
4. Multi-Component Silicone Sealants:
   a. Spectrem 4-TS. D.O.E
5. Single Component Silicone Sealants:
   a. Spectrem 1.
   b. Spectrem 2.
   c. Spectrem 3.
   d. Or equal

B. Interior Sealant Joint [Type C]:
1. Applications:
   a. Control and expansion joints on exposed interior surfaces of exterior walls.
   b. Perimeter joints on exposed interior surfaces of exterior openings.
   c. Perimeter joints between interior wall surfaces and frames of interior doors, windows, storefronts, louvers, elevator entrances and similar openings.
   d. Other interior joints in vertical surfaces and non-traffic horizontal surfaces subject to movement for which no other sealant is specified.
2. Multi Component Urethane Sealants:
   a. Dymeric 240/240FC.
   b. Vulkem 227.
   c. Or equal
3. Single Component Urethane Sealants:
   a. Dymonic FC.
   b. Dymonic.
   c. Vulkem 116.
   d. Or equal
4. Single Component Silicone Sealants:
   a. Spectrem 1.
   b. Spectrem 2.
   c. Spectrem 3.
   d. Or equal
5. Other Sealants:
   a. Tremflex 834.

Reviewed for Code Compliance
Inspections Division
Approved with Conditions
Date: 10/31/17

b. Or equal

C. Interior Sanitary Sealant Joint [Type G]:
1. Applications:
a. Joints in toilet room and bathroom counter tops.
b. Joints between plumbing fixtures and adjacent materials.
c. Joints between locker room lockers and adjacent materials.
d. Joints between food service equipment and surrounding construction.
e. Other interior joints in wet areas where needed to limit mold and mildew growth.
2. Single Component Silicone Sealants:
a. Tremsil 200.
b. Or equal

D. Concealed Metal Lap Sealant Joint [Type J]:
1. Applications:
a. Concealed lap and hook joints in sheet metal flashing and trim.
2. Single Component Non-Curing Sealants:
a. Tremco Butyl Sealant.
b. Or equal

E. Concealed Bedding Sealant Joint [Type K]:
1. Applications:
a. Bedding joints under metal thresholds and saddles.
b. Bedding joints between sheet metal flashing and other materials.
2. Single Component Urethane Sealants:
a. Dymonic FC.
b. Dymonic.
c. Vulkem 116.
d. Or equal
3. Single Component Silicone Sealants:
a. Proglaze.
b. Spectrem 2.
c. Spectrem 3.
d. Or equal
4. Single Component Non-Curing Sealants:
a. Tremco Butyl Sealant.
b. Tremco Acoustical Sealant.
c. Or equal

END OF SECTION

Reviewed for Code Compliance
Inspections Division
Approved with Conditions
Date: 10/31/17

STEEL DOORS AND FRAMES

SECTION 08100

1.02 DESCRIPTION OF WORK:

A. Work Included: Provide labor, materials, and equipment necessary to complete the work of this section. Extent of steel doors and frames required is indicated on drawings and in schedules.

1. Furnish and Install:

   a. Steel frames for hollow metal doors - exterior doors and frames shall be thermally broken.
   b. Steel frames for wood doors - exterior doors and frames shall be thermally broken.
   c. Steel sidelite, borrowed lite, and transom frames
   d. Hollow metal doors

2. Install Only: Finish hardware for hollow metal doors as specified in Section 08710 Finish Hardware.

B. Related work specified elsewhere:

1. SECTION 08210: WOOD DOORS
2. SECTION 08710: FINISH HARDWARE
3. SECTION 09900: PAINTING

1.03 QUALITY ASSURANCE; SUBMITTALS:

A. General: Comply with requirements of SECTION 01330 - SUBMITTALS, MEETINGS & RECORD DOCUMENTS and SECTION 01450 - QUALITY CONTROL SERVICES.

B. Manufacturer: Provide steel doors and frames complying with these specifications from one of the following:

1. CECO
2. Curries
3. Steelcraft

C. Supplier: A recognized hollow metal supplier, with in-house fabrication facilities, who has been furnishing doors and frames in the project's vicinity for a period of not less than five years.

D. Product Data: Submit four copies of manufacturers technical product data for each item. Include whatever information may be necessary to show compliance with requirements, and include instructions for installation and maintenance.

E. Door Schedule: Submit final door schedule in manufacturer’s standard format and as outlined below. Coordinate doors, frames and related work to ensure proper size, thickness, hand, function, and fasteners.

Reviewed for Code Compliance
Inspections Division
Approved with Conditions
Date: 10/31/17

1. **NOTE: Contractor shall make all submittals for finish hardware, doors, frames and related items simultaneously, only after proper review and coordination by own staff beforehand.**

2. Final Door Schedule Content: Based on doors and frames in drawings, organize door schedule to indicate complete designations of every item required for each door or opening. Include the following information:

   a. Type, style, hand, size and construction of each item.

   b. Anchors and fastenings to related work.

   c. Corner construction of welded and/or knocked down frames.

   d. Location of door and frame cross-referenced to indications on drawings both on floor plans and in hardware schedule.

   e. Explanation of all abbreviations, symbols, codes, etc. contained in schedule.

   f. Mounting locations for hardware.

   g. Door construction and materials.

   h. Gage and finish of all materials.

3. Shop Drawings: Submit separate detail drawings, referenced to door schedule, showing size, hand, construction, fasteners, anchors and all other details pertinent to the fabrication of doors and frames for this project.

1.04 APPROVAL OF SUBSTITUTIONS:

A. Manufacturers and model numbers specified herein are to establish a standard of quality. If products other than those specifically identified herein are to be considered for this Project, they must be submitted for approval of the Architect not less than ten (10) calendar days prior to receipt of General Bids.

B. Requests for approval of substitutions shall be in writing, accompanied by catalog cuts, technical information and physical samples.

C. Approval of substitutions shall only be valid when issued by Architect to all bidders in the form of Addendum.

1.05 REFERENCES:

A. ANSI A115 Series: Standards for Steel Doors And Frames.

B. NFPA 80, NFPA 101.

C. Other applicable building and life safety codes.

D. Door and Hardware Institute: "Recommended Locations for Builder's Hardware.

E. ANSI A117.1: American National Standard Providing Accessibility and Usability for Physically Handicapped People.

F. Other applicable industry standards.

Reviewed for Code Compliance
Inspections Division
Approved with Conditions
Date: 10/31/17

1.06 PRODUCT PACKAGING AND HANDLING:

A. Tag each item or package separately, with identification related to final door schedule.

B. All doors shall be packaged in full cartons and securely banded.

C. Doors and frames shall be received by the contractor at the jobsite and handled in a manner so as not to be damaged. They shall be stored upright in a protected area on wood runners or skids and shall be covered with vented tarpaulins or plastic.

1.07 WARRANTY: Doors and frames specified for this Project shall be guaranteed against defects in material and workmanship for a period of one (1) year from date of Substantial Completion of Project.

PART 2 – PRODUCTS

2.01 MATERIALS:

A. Doors shall be manufactured from commercial quality cold-rolled steel sheets. Exterior doors shall be A60 hot-dipped galvanized.

B. Frames shall be manufactured from commercial quality cold-rolled steel sheets. Exterior frames shall be A60 hot-dipped galvanized.

C. Steel shall conform to ASTM standards A366 or A620 and A568 (uncoated), ASTM A526 or A642 and A525 (galvanized).

D. All doors and frames shall be chemically treated for paint adhesion and prime painted to meet performance requirements of ANSI A224.1.

2.02 DOOR FABRICATION:

A. Interior doors shall be 1-3/4” thick, manufactured from two 18 gage steel sheets. A one piece resin-impregnated honeycomb core with sanded edges shall be securely bonded to both face sheets. Doors shall have mechanically interlocked vertical edges, flush face sheets, and hairline seam edges. The top and bottom of the door shall be closed flush by 16 gage steel channels (where concealed door bottoms are specified, bottom channel shall be reversed to allow insertion of door bottom into door web). At contractor option, in lieu of honeycomb cores, doors may be provided with a rigid polystyrene foam core, continuously bonded to the face sheets, and completely filling the door.

B. Exterior doors shall be 1-3/4” thick, manufactured from two 16 gage galvanized steel sheets. The interior of the doors shall be completely filled with a foamed-inplace polyurethane core, chemically bonded to all interior surfaces. Doors shall have mechanically interlocked vertical edges, flush face sheets, and hairline seam edges. The top and bottom of the door shall be closed flush by 16 gage steel channels (where concealed door bottoms are specified, bottom channel shall be reversed to allow insertion of door bottom into door web).

Reviewed for Code Compliance
Inspections Division
Approved with Conditions
Date: 10/31/17

C. All doors shall be handed type with factory preparation for all concealed or mortised Finis Hardware scheduled. Door closer reinforcements shall be provided for all doors whether scheduled to received closer or not. Reinforce doors for all surface applied hardware.

D. Non-handed doors, and/or filler plates for cutouts not required for scheduled hardware preparation shall NOT be acceptable.

2.03 FRAME FABRICATION:

A. General: Frames shall be knocked down and field assembled or welded type at contractor option.

B. Standard knockdown or welded frames shall be manufactured form 16 gage steel sheets with 2” face and 5/8” integral stop. Jamb depth to be determined by wall thickness in accordance with the drawings. Supply appropriate anchors for wall construction.

C. Drywall frames shall be manufactured form 16 gage steel sheets with 2” face and 5/8” integral stop and double back bend to grip the partition firmly without marring the wall surface. Jamb depth to be determined by wall thickness in accordance with the drawings. Provide adjustable plumb anchors to insure square and plumb installation. Supply standard floor anchors for bottom of each jamb.

D. Prepare frames for all concealed or mortised hardware and reinforce for all surface applied hardware.

E. Provide plaster guards for all hardware cutouts.

F. Prepare frames to receive pneumatic type silencers: two for each pair frame, three for each single frame.

G. Exterior frames shall include a thermal break.

2.04 FIRE RATED ASSEMBLIES

A. All labeled fire doors and frames shall be of a type tested in accordance with ANSI/UL-10b, ASTM E-152, NFPA-252, or UL-305, and shall provide the degree of fire protection, heat transmission, panic-loading capabilities, and/or smoke control as indicated on the label and required by the drawings.

B. Labeled doors and frames shall bear the label of Underwriters Laboratories, Warnock Hersey, or Factory Mutual and shall meet all requirements of the labeling agencies current procedures and policies.

PART 3 - EXECUTION

3.01 INSTALLATION

A. Doors and frames shall be assembled, installed, and erected plumb and in true alignment and in conformance with manufacturer’s recommendations and final approved shop drawings. Preparation for surface applied hardware shall be performed on the jobsite.

Reviewed for Code Compliance
Inspections Division
Approved with Conditions
Date: 10/31/17

Frames shall be rigid and securely anchored in place. Doors shall be installed in a manner achieve functional operation and appearance.

B. Install hardware in compliance with 08710 FINISH HARDWARE.

END OF SECTION

Reviewed for Code Compliance
Inspections Division
Approved with Conditions
Date: 10/31/17

Section 08110

AUTOMATIC SLIDING DOORS
SERIES 2003 ELECTRIC OPERATOR
WITH ALUMINUM DOORS SPECIFICATIONS

PART I - GENERAL

1.01 DESCRIPTION

This section covers the furnishing and installation of a complete automatic sliding door system. It includes operator, track, doors, and activating devices all as required for installation as shown and specified. The General Contractor shall coordinate the work of all trades including the automatic door supplier, hardware supplier, carpenter, mason, and electrician as so specified.

1.02 RELATED WORK COVERED BY OTHER APPLICABLE SECTIONS OF SPECIFICATION SHALL INCLUDE:

A. Electrical Supply and Connections (120 VAC Dedicated Circuit)
B. Glass and glazing
C. Caulking

1.03 QUALITY ASSURANCE

A. ANSI A156.10 STANDARD
Provide automatic entrance doors complying with applicable requirements of Power Operated Pedestrian Door Standard where applicable to door type.

B. UL 325
Provide powered door operators complying with UL 325, Electrical Door, Drapery, Gate, Louver, and Window Operators and Systems.

C. MANUFACTURER'S QUALIFICATIONS
Provide units produced by a firm with not less than 5 years successful experience in the fabrication of automatic doors of the type required for this project.

D. INSTALLER'S QUALIFICATIONS
Engage an installer who has an AAADM certified inspector on staff and is an authorized representative of the automatic door manufacturer for both the installation and maintenance of the type of units required for this project.

1.04 SUBMITTALS

A. PRODUCT DATA
Submit manufacturer's product data and standard details for automatic doors, including fabrication, finishing hardware, operators, accessories, and other components of the work.

Reviewed for Code Compliance
Inspections Division
Approved with Conditions
Date: 10/31/17

Include rough-in diagrams, wiring diagrams, parts lists, and maintenance instructions, as well as certified test data (where required).

B. TEMPLATES AND DIAGRAMS
Furnish templates, diagrams, and other data to fabricators and installers of related work, as needed for coordination of automatic entrance installation.

C. SHOP DRAWINGS
Submit shop drawings for the fabrication and installation of automatic entrance doors and associated components of the work. Indicate anchors, joint system, expansion provisions, hardware, and other components not included in manufacturer's standard data. Include glazing details (where required).

1.05 WARRANTY
Units to be warranted against defect in material and workmanship for a period of one year from the date of installation.

PART II - PRODUCT

2.01 MANUFACTURER
Series 2000B automatic sliding door(s) shall be of type(s) and size(s) as indicated on plans, as manufactured by Horton Automatics, a division of the Overhead Door Corporation or equal.

2.02 EQUIPMENT

A. DOOR UNITS
Shall include operator, header and track, jambs, sliding door, threshold and sidelight if required. All structural aluminum sections shall be 6063T-5 alloy not less than .125 inch thickness with safety radius corners on all vertical rails. Continuous extruded header section shall conceal the four, high quality, ball bearing wheels on nylon-covered support track. Concealed guides shall stabilize bottom of door. Anti-derailing means shall be continuous extrusion full length of door travel. Track must be replaceable without having to remove the operator. An adjustable astragal with double mohair weather-strip shall be provided on all strike rails. Joining vertical panel rails shall have complementing mohair weather-stripping, while horizontal rails shall be weather-stripped with mohair type fabric. Door panel construction shall be by means of tongue-and-groove key fitted gussets that have two tempered bolts in each corner section to assure against racking failure. Sliding door (and swinging sidelight) shall include a spring to re-close the door if pushed open.

B. FINISH

1) Manufacturer's standard two coat Duranar finish. Color to be selected by owner from manufacturer's standard color chart.

Reviewed for Code Compliance
Inspections Division
Approved with Conditions
Date: 10/31/17

C. UNIT TYPE

Units shall be type
1) Series 2000B Type 310 (XO-XX-XX-OX) Swing pocket panel applies to the outside of the unit. No locks shall be applied to swing pocket panel.

D. HARDWARE

Cardreader and lock with panic override on interior vestibule/ lobby doors only . Cardreader supplied and install by other. Panic override to include concealed vertical rod panic device and fail-secure electric lock. Allows interior door to be locked during secured hours,to grant ingress via valid key card, to allow 24/7 emergency egress from building interior.

E. OPERATOR

Shall be electromechanical, utilizing a 1/8 Hp, DC permanent magnet motor with gear transmission and belt drive. Operator shall be header mounted and concealed with a securely attached hinged cover. The belt shall be nylon reinforced neoprene 3/4" (17 mm) wide. The opening speed, closing speed, back check and latch check shall be fully and independently adjustable. Programmable, fully adjustable partial opening in steps of 1". This shall be accomplished by utilizing the operator's microprocessor C2150 master control, which will include programming for aforementioned functions, as well as time-delay. Control shall include an alpha-numeric display for diagnostic testing of electrical and mechanical functions and full digital adjustment capabilities to provide precise door control and braking. Control shall include auto seal feature, which provides a door check every 11 seconds to guarantee the doors are closed. A revolution counter shall be used to memorize and continuously recheck the door's position and to issue instruction for the functions of partial opening (optional) and to check the door's speed. A serial communication port shall be provided. The operator shall reverse when maximum force of 28 lbs. (125 N) is exerted to prevent the door from closing. The reverser shall be field adjustable to meet job conditions. For protection in case of electrical power failure, operator shall revert to free manual operation of the door. A power ON/OFF switch shall be located on the inside of the header and shall serve a second function as ``hold open" for door when in OFF position.

2.03 CONTROL SWITCHES

Each sliding door unit shall include two C1185 photoelectric beams (C1304 set) mounted in the vertical rails of the sidelight at heights of 24" and 48". Each shall parallel door opening and serve as a door hold-open when interrupted. Actuation shall include a motion detector mounted on each side of the door for detection of traffic in each direction.

2.04 REQUIREMENTS FOR ELECTRICAL WORK

The Electrical Contractor shall furnish and install all wiring to operator. Provide 120 VAC, 60 cycle, 1 phase, 15 amp service to each operator (header) on a separate circuit breaker routed into header. Remote switches (if specified) shall be provided with control wire and electrical boxes from switches to operators. Remote switches provided under this section shall be installed by the electrical contractor.

NOTE: Maximum current draw is 5 amps per operator protected by internal circuit breaker in operator.

Reviewed for Code Compliance
Inspections Division
Approved with Conditions
Date: 10/31/17

PART III - EXECUTION

3.01 INSPECTION

Installer must examine the areas and conditions under which automatic doors are to be installed and notify the Contractor in writing of conditions detrimental to the proper and timely completion of work. Do not proceed with the work until all unsatisfactory conditions have been corrected in a manner acceptable to the installer and in accordance with approved shop drawings.

3.02 INSTALLATION

Comply with specifications and recommendations. Set track and operator plumb, level and true to line, without warp or rack of doors. Anchor securely in place. Isolate aluminum and other corrodible materials from sources of electrolytic action at points of contact. Install complete door operator system in accordance with manufacturer's instructions, including drive mechanism, controls, and control switches. To be supplied and installed by an AAADM certified installer inconformity with ANSI 156.10

3.03 ADJUST AND CLEAN

Adjust operator and controls for optimum condition and safety. Lubricate operating equipment. Clean surfaces promptly after installation, exercising care to avoid damage of the protective coating (if any). Advise contractor of protective treatment and other precautions required through the remainder of the construction period, to ensure that doors will be without damage or deterioration (other than normal weathering) at the time of acceptance.

END OF SECTION

Reviewed for Code Compliance
Inspections Division
Approved with Conditions
Date: 10/31/17

SECTION 08210

WOOD DOORS

PART 1 - GENERAL

1.02 DESCRIPTION OF WORK:

A. Work Included: Provide labor, materials, and equipment necessary to complete the work of this section. Extent of wood doors required is indicated on drawings and in schedules.

1. Furnish and Install:
   a. Flush wood doors for steel frames
   b. Related work specified elsewhere:
2. SECTION 08710: FINISH HARDWARE
3. SECTION 09900: PAINTING

1.03 QUALITY ASSURANCE; SUBMITTALS:

A. General: Comply with requirements of SECTION 01300 - SUBMITTALS, MEETINGS & RECORD DOCUMENTS; SECTION 01400 - QUALITY CONTROL SERVICES.

B. Manufacturer: Provide wood doors complying with these specifications from one of the following:

1. Weyerhaeuser
2. Brosco
3. Mohawk
4. Masonite

C. Supplier: A recognized wood door supplier, with in-house fabrication and warehousing facilities, who has been furnishing doors and frames in the project's vicinity for a period of not less than five years.

D. Product Data: Submit four copies of manufacturers technical product data for each item. Include whatever information may be necessary to show compliance with requirements, and include instructions for installation and maintenance.

E. Door Schedule: Submit final door schedule in manufacturer’s standard format. Coordinate doors, frames and related work to ensure proper size, thickness, hand, function, and fasteners.

1. **NOTE: Contractor shall make all submittals for finish hardware, doors, frames and related items simultaneously, only after proper review and coordination by own staff beforehand.**

Reviewed for Code Compliance
Inspections Division
Approved with Conditions
Date: 10/31/17

2. Shop Drawings: Submit separate detail drawings, referenced to door schedule, showing size, hand, construction, fasteners, elevation and all other details pertinent to the fabrication of doors and frames for this project.

1.04 APPROVAL OF SUBSTITUTIONS:

A. Manufacturers and model numbers specified herein are to establish a standard of quality. If products other than those specifically identified herein are to be considered for this Project, they must be submitted for approval of the Architect not less than ten (10) calendar days prior to receipt of General Bids.

B. Requests for approval of substitutions shall be in writing, accompanied by catalog cuts, technical information and physical samples.

C. Approval of substitutions shall only be valid when issued by Architect to all bidders in the form of Addendum.

1.05 REFERENCES:

A. Applicable AWI standards.

B. NFPA 80, NFPA 101.

C. Other applicable building and life safety codes.

D. Door and Hardware Institute: "Recommended Locations for Builder's Hardware."

E. ANSI A117.1: American National Standard Providing Accessibility and Usability for Physically Handicapped People.

F. Other applicable industry standards.

G. To achieve "S" rating, a fire-rated smoke gasket (See Spec Section 08710) must be applied around the perimeter of the frame. Comply with the requirements of the International Building Code with testing in accordance with UL10C for positive pressure door test. (a) Test Pressure: After 5 minutes in to the test, the neutral pressure level in furnace shall be established at 40 inches or less above the sill. (b) Doors shall be labeled to certify compliance. (c) Provide installation instructions attached to each door in a manner that assures availability to the installer and building official.

1.06 PRODUCT PACKAGING AND HANDLING:

A. Tag each item or package separately, with identification related to final door schedule.

B. All doors shall be packaged in full cartons and securely banded.

C. Doors and frames shall be received by the contractor at the jobsite and handled in a manner so as not to be damaged. They shall be stored upright in a protected area on wood runners or skids and shall be covered with vented tarpaulins or plastic.

Reviewed for Code Compliance
Inspections Division
Approved with Conditions
Date: 10/31/17

1.07 WARRANTY: Doors and frames specified for this Project shall be guaranteed against defects in material and workmanship for a period of one (1) year from date of Substantial Completion of Project.

PART 2 – PRODUCTS

2.01 FLUSH WOOD DOORS:

A. Doors shall be 1-3/4" thick with particle board cores bonded to stiles and rails.

B. Provide standard 3-ply face veneer of plain slice oak.

C. Factory prepare doors to receive concealed or mortise hardware as specified in 08710 FINISH HARDWARE.

D. Door assemblies in corridors and smoke barriers shall meet UL1784.

E. Rated side-hinged doors shall meet UL10C.

2.02 Molded Panel Door

A. 1 3/4 inch solid core composite wood 20 minute rated at guest unit entry and unit to unit passage. Two panel roman sooth by Masonite.

B. Factory prepare doors to receive concealed or mortise hardware as specified in 08710 FINISH HARDWARE.

C. Door assemblies in corridors and smoke barriers shall meet UL1784.

PART 3 - EXECUTION

3.01 INSTALLATION

A. Doors and frames shall be assembled, installed, and erected plumb and in true alignment and in conformance with manufacturer's recommendations and final approved shop drawings. Preparation for surface applied hardware shall be performed on the jobsite. Frames shall be rigid and securely anchored in place. Doors shall be installed in a manner to achieve functional operation and appearance.

B. Install hardware in compliance with 08710 FINISH HARDWARE.

END OF SECTION

Reviewed for Code Compliance
Inspections Division
Approved with Conditions
Date: 10/31/17

HAMPTON INN TECHNICAL DATA SHEET

HAMPTON INN (FYI)

Complete data for the sliding door hardware of your upcoming
GUESTROOM BATHROOM and
ACCESSIBLE GUESTROOM BATHROOM remodel.

ELEVATION

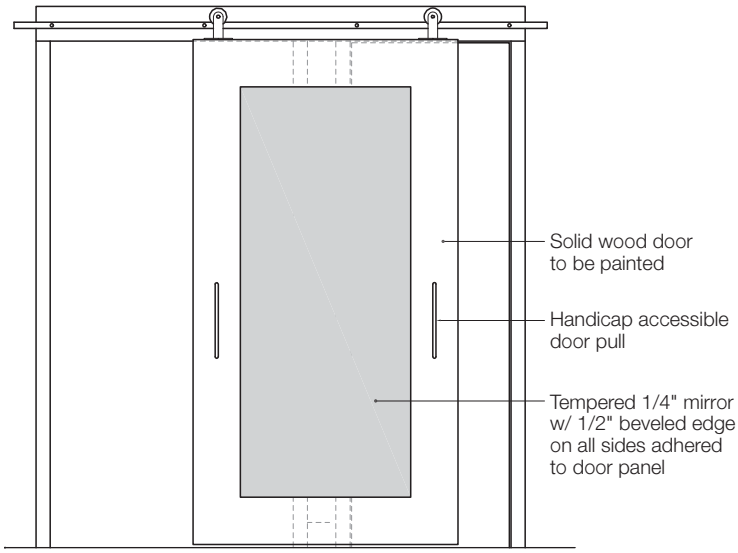

Door not included.

PLAN

A - DOOR SHOWN IN THE CLOSED POSITION

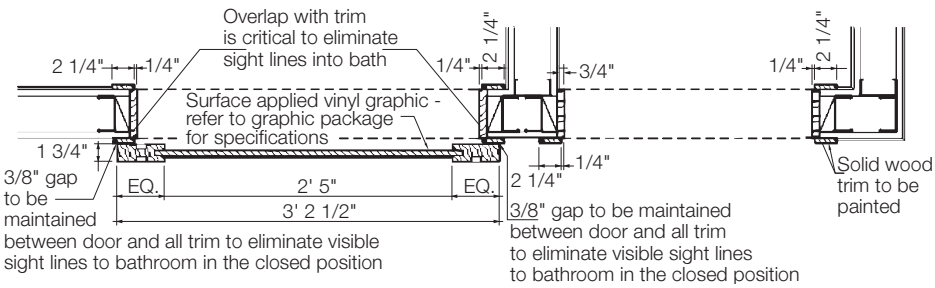

B - DOOR SHOWN IN THE OPEN POSITION

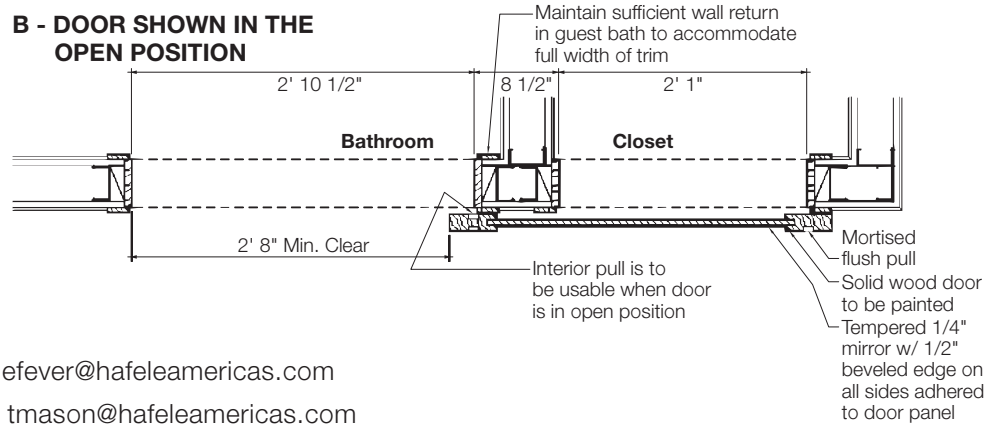

Häfele America Co. is a Hilton supplier connection Recommended Partner (Door & Door Hardware, Sliding Panel Doors and Barn Door Solutions)

For any additional information please contact:

Ty LeFever | Tel: (815) 315-3410 | Email: tlefever@hafeleamericas.com

Todd Mason | Tel: (336) 684-5885 | Email: tmason@hafeleamericas.com

HÄFI

Reviewed for Code Compliance
Inspections Division
Approved with Conditions
Date: 10/31/17

HAMPTON INN TECHNICAL DATA SHEET (continued)

GUESTROOM BATHROOM SLIDING DOOR

Flatec VI Wood Fitting Set with 75” Upper Track and Hangar Bolts

Material: Stainless Steel, matt

Item No. 940.64.1X0.H

ACCESSIBLE GUESTROOM BATHROOM SLIDING DOOR

Flatec VI Wood Fitting Set with 82 13/16” Upper Track and Hanger Bolts

Material: Stainless Steel, matt

Item No. 940.64.1X1.H

ACCESSORIES FOR ACCESSIBLE GUESTROOM

Door Pulls with Through Bolts
ADA Compliant
CTC: 192 mm
Material: Zinc, stainless steel matt

BACK TO BACK PULL

Item No. 902.00.700.M

SINGLE BACK PULL

Item No. 902.00.710.M

ACCESSORIES TO COMPLETE YOUR SLIDING DOOR

FLUSH PULL

Material: Stainless Steel, matt
Item No. 902.01.520.H

POCKET DOOR JAMB LOCK, OPTIONAL

Material: Brass, brushed chrome
Item No. 911.26.251
Supplied with: 2 screws, strike plate, safety hole release protector

HANGAR BOLT DRIVER 5/16” x 18

Item No. 006.40.312

Reviewed for Code Compliance
Inspections Division
Approved with Conditions
Date: 10/31/17

HAMPTON INN TECHNICAL DATA SHEET

HAMPTON INN (FYI) - Special Condition

Complete data for the sliding door hardware of your upcoming
GUESTROOM BATHROOM

LOW OVERHEAD APPLICATION

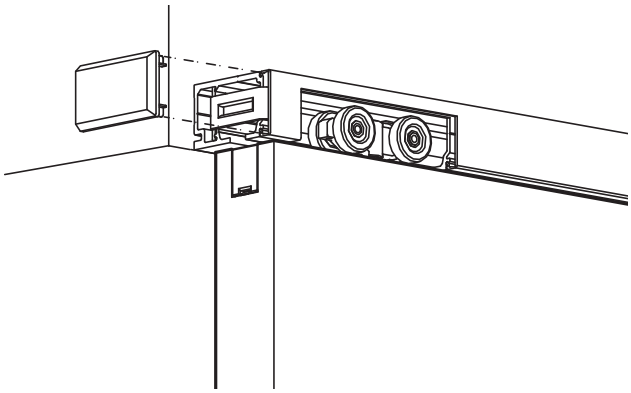

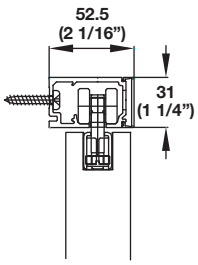

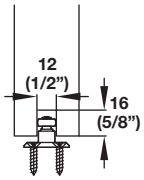

Häfele America Co. is a Hilton supplier connection Recommended Partner
(Door & Door Hardware, Sliding Panel Doors and Barn Door Solutions)

For any additional information please contact:

Ty LeFever | Tel: (815) 315-3410 | Email: tlefever@hafeleamericas.com

Todd Mason | Tel: (336) 684-5885 | Email: tmason@hafeleamericas.com

Reviewed for Code Compliance
Inspections Division
Approved with Conditions
Date: 10/31/17

HAMPTON INN TECHNICAL DATA SHEET (continued)

EKU PORTA 60 HMD FITTING SET

with 78 3/4" Wall Mounted Upper Track

Item No. 940.60.116

EKU PORTA 100 HMD FITTING SET

with 78 3/4" Wall Mounted Upper Track

Item No. 941.00.116

ACCESSORIES

Door Pulls with Through Bolts
ADA Compliant
CTC: 192 mm
Material: Zinc, stainless steel matt

BACK TO BACK PULL

Item No. 902.00.700.M

SINGLE BACK PULL

Item No. 902.00.710.M

FLUSH PULL

Material: Stainless Steel, matt
Item No. 902.01.520.H

POCKET DOOR JAMB LOCK, OPTIONAL

Material: Brass, brushed chrome
Item No. 911.26.251
Supplied with: 2 screws, strike plate, safety hole release protector

Reviewed for Code Compliance
Inspections Division
Approved with Conditions
Date: 10/31/17

HAMPTON INN TECHNICAL DATA SHEET

HANDLES FOR DRESSER

Material: Aluminum, silver anodized

Item No. 103.88.9X1.H

Item No. 103.88.9X8.H

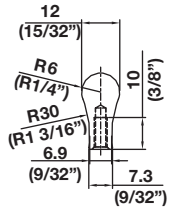

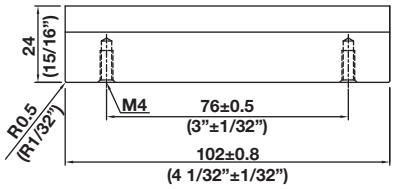

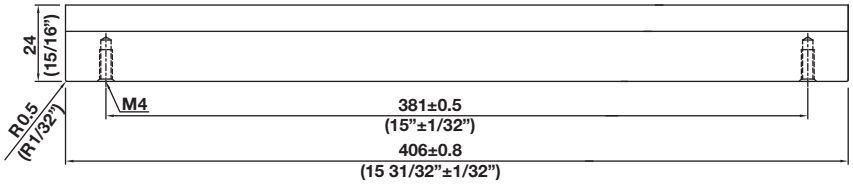

HANDLES FOR VANITY

Material: Stainless Steel, matt

Item No. 112.82.9X0.H

Item No. 112.82.9X1.H

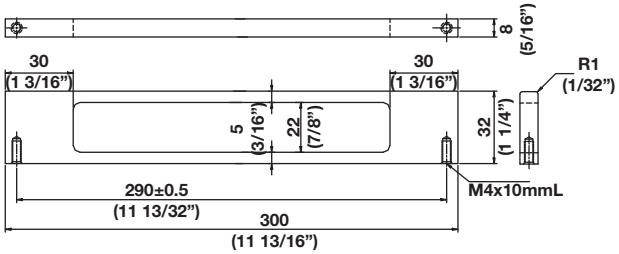

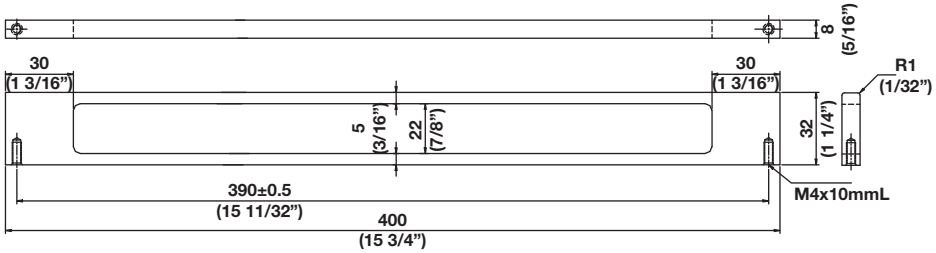

Reviewed for Code Compliance
Inspections Division
Approved with Conditions
Date: 10/31/17

HAMPTON INN TECHNICAL DATA SHEET

WIRE BASKET

- Ideal for storage of clothing and shoes
- Sloped basket front allows easy access to contents
- Unique side, designed with location for placement of slide
- Baskets easily disconnect for portability
- Interior opening: 18”
- Width x Depth x Height: 17” x 16” x 6”

Material: Steel; Finish: chrome-plated

Item No. 547.38.252.H

Supplied with 6 pcs w/slides

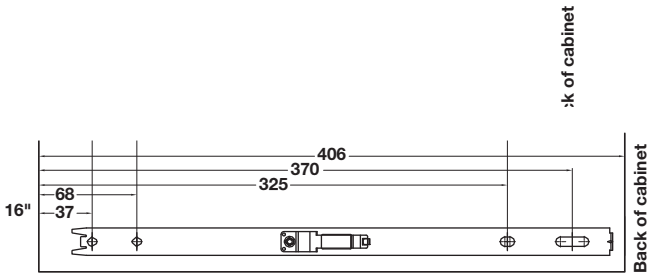

SHELF SUPPORT

- For concealed installation with screw-on plate and adjustment
- For shelf thickness: ≥24 mm
- Adjustment: Inclination adjustment: Via support bolt
  Height adjustment: Via slots in screw-on plate
  Side adjustment: Via support bolt
- Installation: For screw mounting to support element
  For mounting in drilled hole in shelf

Material: Steel; Finish: galvanized

Item No. 283.33.941

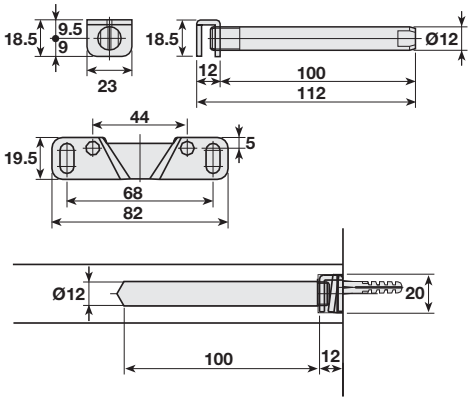

Load bearing capacity (with two supports on 900 mm shelf, adding one support for every 450 mm increase in length)

Shelf Depth (mm)	Max. Load Bearing Capacity (kg)
175	20
200	17
225	15
250	14
275	13
300	12

Reviewed for Code Compliance
Inspections Division
Approved with Conditions
Date: 10/31/17

SECTION 08220

SLIDING PANEL DOORS

PART 1 – GENERAL

1.01 DESCRIPTION

A. General
   1. Furnish and install operable glass partitions and suspension system. Provide all labor, materials, tools, equipment, and services for glass operable walls in accordance with provisions of contract documents.

1.02 RELATED WORK BY OTHERS

A. Preparation of opening will be by General Contractor. Any deviation of site conditions contrary to approved shop drawings must be called to the attention of the owner.
B. All header, blocking, support structures, jambs, and track enclosures, as required in 1.04 Quality Assurance.
C. Pre-punching of support structure in accordance with approved shop drawings.
D. Paint or otherwise finishing all trim and other materials adjoining head and jamb of the partitions.

1.03 SUBMITTALS

A. Complete shop drawings are to be provided prior to fabrication indicating construction and installation details. Shop drawings must be submitted within 60 days after receipt of signed contract.

1.03 QUALITY ASSURANCE

A. Glass shall be clear tempered per ASTM C1048-97b.

1.04 PRODUCT DELIVERY, STORAGE, AND HANDLING

A. Proper storage of partitions before installation and continued protection during and after installation will be the responsibility of the General Contractor. See Hufcor conditions of warranty for recommended handling procedures.

1.05 WARRANTY

Panel frames shall be guaranteed for two-years against defects in material and workmanship (including one-year labor). Track and carriers shall be guaranteed for five years against defects in material and workmanship. The glass is not included in this warranty.

Reviewed for Code Compliance
Inspections Division
Approved with Conditions
Date: 10/31/17

PART 2 – PRODUCTS

2.01 ACCEPTABLE MANUFACTURERS

A. Hufcor Inc., Janesville, WI
B. Contact: Corbin-Hufcor, Inc, Marc Jenkins 781-871-4941 Ext. 228, mjenkins@corbbinhufcor.com

2.02 MATERIALS

A. Product to be top supported, individual or paired, Series GT1/2 wood-framed glass panels as manufactured by Hufcor.
   1. Panels shall be nominally 1-3/4" [43mm] thick and to 48" [1219] in width.
   2. Top, vertical, and bottom wood rails shall be of three way cross grain lamination.
   3. Wood species to be submitted to owner.
   4. Vertical lead rails shall contain full height partially recessed rubber bulb seal
   5. Horizontal top & bottom rails shall incorporate continuous contact seals of multi-ply vinyl.
   6. Each panel contains a mortise footbolt which extends into a floor mounted plate with spring-loaded dust cover floor receptor to stabilize and secure each panel in the opening.
   7. Glass inserts shall be
      a. 1/4" [6mm] tempered glass (standard)
   8. Glass shall be glazed using matching solid wood stops one side of panel.
B. Weight of the panels shall be approximately:
   1. 1/4" [6] tempered glass: 6.3 lbs. per sq. ft.
C. Suspension system:
   1. Track shall be of clear anodized architectural grade extruded aluminum alloy 6063-T6. Track design shall provide integral support for adjoining ceiling, soffit, or plenum sound barrier. Track shall be connected to the structural support by pairs of 3/8" [10] dia. threaded steel hanger rods.
      a. Type 38 (curve divert) tracks to stack at both or one end.
      b. Each panel shall be supported by two 2-wheeled counter-rotating horizontal carriers or two, four wheeled carriers. Wheels to be of precision ground steel ball bearings enccased with molded polymer tires.
D. Finishes
   1. Aluminum track shall be clear anodized
   2. Wood frame shall be furnished stained and finished. Submit color samples to owner.
   3. Multi-ply sweep seals shall be brown.
   4. Hardware finish to be submitted to owner.
E. Available Accessories/Options
   1. Inset pass door of the same thickness and construction as the basic panels, one-way swing.
   2. Floor Locks
      a. Adams Rite keyed floor lock

Reviewed for Code Compliance
Inspections Division
Approved with Conditions
Date: 10/31/17

2.03 OPERATION

A. Panels shall be manually moved from the storage area, positioned in the opening, and either edge activated or face activated floor bolts set.
B. Final partition closure to be by:
   1. Overlapping the opening
C. Stack/Store Panels
   1. Retract floorbolt and move to storage area. Panels are stored on stacks in storage area(s).

PART 3 – EXECUTION

A. Installation. The complete installation of the glass wall system shall be by an authorized factory-trained installer and be in strict accordance with the approved shop drawings and manufacturer's standard printed specifications, instructions, and recommendations.
B. Cleaning
   1. All track and panel surfaces shall be wiped clean and free of handprints, grease, and soil per specific instructions.
   2. Optional specialty glass requires special cleaning per instructions provided.
   3. Cartoning and other installation debris shall be removed to on-site waste collection area, provided by others.
C. Training
   1. Installer shall demonstrate proper operation and maintenance procedures to owner's representative.
   2. Owners manuals shall be provided to owner's representative.

END OF SECTION

Reviewed for Code Compliance
Inspections Division
Approved with Conditions
Date: 10/31/17

SECTION 08310

WALL AND CEILING ACCESS PANELS AND FRAMES

PART 1 GENERAL

1.1 SECTION INCLUDES

A. Non-Rated Wall and Ceiling Access Doors with Frames

1.2 RELATED SECTIONS

A. Section 09900 - Paints and Coatings: Field paint finish.

B. Section 15820 - Duct Accessories: Access doors in ductwork.

C. Section 03100 - Concrete Forms and Accessories: Placement of access frame unit anchors in concrete.

1.3 SUBMITTALS

A. Submit under provisions of Section 01300.

B. Product Data: Manufacturer's data sheets on each product to be used, including:
1. Sizes, types, finishes, hardware, scheduled locations, fire resistance listings.
2. Preparation instructions and recommendations.
3. Storage and handling requirements and recommendations.
4. Installation methods.

C. Shop Drawings: Indicate exact position of access door units with associated drawings. All access panels shall be shown in Submittal package, and no access panels shall be installed without approval through the submittal process.

D. Verification Samples: For each finish product specified, two samples, minimum size 12 inches (300 mm) square, representing actual product and anchors.

E. Manufacturer's Certificates: Certify products meet or exceed specified requirements.

1.4 QUALITY ASSURANCE

A. Manufacturer Qualifications: Company specializing in manufacturing products specified with minimum three years documented experience.

B. Installer Qualifications: Company specializing in installing products specified with minimum three years documented experience.

C. Mock-Up: Provide a mock-up for evaluation of surface preparation techniques and application workmanship.

Reviewed for Code Compliance
Inspections Division
Approved with Conditions
Date: 10/31/17

1. Finish areas designated by Architect.
2. Do not proceed with remaining work until workmanship is approved by Architect.
3. Refinish mock-up area as required to produce acceptable work.

1.5 DELIVERY, STORAGE, AND HANDLING

A. Store products in manufacturer's unopened packaging until ready for installation.

1.6 COORDINATION

A. Coordinate Work with work requiring controls, valves, traps, dampers, cleanouts, and similar items requiring operation being located behind finished surfaces.

B. Ensure that products of this section are supplied to affected trades in time to prevent interruption of construction progress.

1.7 PROJECT CONDITIONS

A. Maintain environmental conditions (temperature, humidity, and ventilation) within limits recommended by manufacturer for optimum results. Do not install products under environmental conditions outside manufacturer's absolute limits.

PART 2 PRODUCTS

2.1 MANUFACTURERS

A. Acceptable Manufacturer:

Babcock-Davis
9300 73rd Avenue North

Brooklyn Park, MN 55428

Toll Free Hotline: 888.412.3726

Toll Free Fax: 888.312.3726

Direct Phone: 763-488-9247

E-Mail: info@babcockdavis.com

Internet: http://www.babcockdavis.com/

B. Requests for substitutions will be considered in accordance with provisions of Section 01600.

2.2 RATED AND NON-RATED WALL AND CEILING ACCESS PANELS AND FRAMES

Reviewed for Code Compliance
Inspections Division
Approved with Conditions
Date: 10/31/17

A. System BRGB - Non Removable Aluminum Hatch: Welded aluminum outer and inner frame with two latches and a 1/16 inch reveal. With or without drywall inlay for ceilings, drywall and various applications.
   1. Styles:
      a. Drywall Inlay F1:
         1) 5/8 inch
      b. DensGlass / Other Building Products.
   2. Size:
      a. Custom size as indicated on the Drawings.
      b. Sizes as indicated on the Drawings
   3. Lock:
      a. Four-square lock.
      b. Round cylinder lock.
      c. Profile cylinder.

B. System BRGBR - Removable Aluminum Hatch: Welded aluminum outer and inner frame with two latches and a 1/16 inch reveal. With or without drywall inlay for ceilings, drywall and various applications.
   1. Styles:
      a. Drywall Inlay F2:
         1) 5/8 inch
   2. Size:
      a. Custom size as indicated on the Drawings.
      b. Sizes as indicated on the Drawings
   3. Lock:
      a. Four-square lock.
      b. Round cylinder lock.
      c. Profile cylinder.

C. System BRGT - Aluminum Tile Hatch: Welded aluminum outer and inner frame with two latches and a 1/16 inch reveal. Hatch is fully removable.
   1. Size: Made to measure sizes.
      a. Custom size(s) as indicated on the Drawings.
   2. Type:
      a. Tiled Door Leaf: Profile flush with board with tiles placed on the door profile.
      b. Tiling Into Frame: Profile is higher than the board with tile place into the frame.
   3. Lock:
      a. Four-square lock.
      b. Round cylinder lock.
      c. Profile cylinder.

D. Fire Rated Access Doors and Frames: Comply with NFPA 80. Provide products listed by UL or another testing agency acceptable to local jurisdictions on each fire rated access door. Provide UL Label on each fire rated access door.

Reviewed for Code Compliance
Inspections Division
Approved with Conditions
Date: 10/31/17

PART 3 EXECUTION

3.1 EXAMINATION

A. Do not begin installation until substrates have been properly prepared.

B. Verify rough openings for access doors and panels are correctly sized and located.

C. If substrate preparation is the responsibility of another installer, notify Architect of unsatisfactory preparation before proceeding.

3.2 PREPARATION

A. Clean surfaces thoroughly prior to installation.

B. Prepare surfaces using the methods recommended by the manufacturer for achieving the best result for the substrate under the project conditions.

3.3 INSTALLATION

A. Install in accordance with manufacturer's instructions.

B. Secure frames rigidly in place, plumb and level in opening, with plane of door and panel face aligned with adjacent finished surfaces.

C. Set concealed frame type units flush with adjacent finished surfaces.

D. Position unit to provide convenient access to concealed work requiring access.

E. Install fire rated units in accordance with NFPA 80 and requirements for fire listing.

3.4 PROTECTION

A. Protect installed products until completion of project.

B. Touch-up, repair or replace damaged products before Substantial Completion.

3.5 SCHEDULES

A. Provide drywall inlay access hatches at all locations in “Front of House” areas, thus excluding housekeeping, employee-only areas, and storage areas. At all other areas, the concealed hatches/access panels shall be used.

END OF SECTION

Reviewed for Code Compliance
Inspections Division
Approved with Conditions
Date: 10/31/17

SECTION 08410

ALUMINUM STOREFRONT

PART 1 GENERAL

1.01 SECTION INCLUDES

A. Section Includes: Aluminum Storefront Systems.
   1. TRACO TR-7850 Multi-Glaze 2” x 4-1/2” Thermally Broken Storefront System, 1” infill. Center glazing

B. Related Sections:
   1. 07900 - Sealants
   2. 08310 - Sliding Doors
   3. 08960 - Slope Glazing

1.02 REFERENCES

A. AAMA-SFM-1-87 - Aluminum Storefront and Entrance Manual.
B. AAMA - Structural Sealant Glazing Systems CW-13-85.
C. ASTM - E1424-91(2000) rate of air leakage through exterior window, curtain walls and doors.
D. ASTM E 331-00 - Test method for water penetration of exterior windows, curtain walls, and doors.
E. AAMA 501.1-94 - Test method for water penetration of exterior windows, curtain walls and doors by dynamic air pressure differential.
F. ASTM A36 - Structural Steel
G. ASTM A386 - Zinc coating (hot dip) or zinc chromate paint on assembled steel products.
H. AAMA 1503.98 - Test method for thermal transmittance and condensation resistance of windows, doors and glazed wall sections.
I. ASTM C794.01 - Test method for adhesion-in-peel of elastomeric joint sealants.
J. ASTM E90-99 & E413-87(1999) Sound Transmission Class Rating.

1.03 PERFORMANCE REQUIREMENTS

A. Wind Loads: Completed storefront system shall withstand wind pressure loads normal to wall plane indicated: Design Pressure 35 PSF min.
B. Deflection: Maximum allowable deflection in any member when tested in accordance with ASTM E 330-90 with allowable stress in accordance with AA Specifications for Aluminum Structures.
   1. L/175 or 3/4” (19.1 mm) maximum.
C. Condensation Resistance and Thermal Transmittance Performance Requirements:
   1. U-Value Requirements:
      a. Perform test in accordance with AAMA 1503.1 procedure and on the configuration specified therein.
      b. Thermal Transmittance (“U” Value) maximum 0.65 (6250) BTU/hr/sf/deg F at 15 mph exterior wind.
D. Air Infiltration: Completed storefront systems shall not exceed 0.06 CFM/FT^2 maximum allowable infiltration when tested in accordance with ASTM E 1424 91(2000) at differential static pressure of 6.24P SF (299 Pa).

Reviewed for Code Compliance
Inspections Division
Approved with Conditions
Date: 10/31/17

E. Water Infiltration: No uncontrolled water when tested in accordance with ASTM E 331-00 at a static pressure of 8 PSF (958 Pa).

1.04 SUBMITTALS

A. General: Prepare, review, approve and submit specified submittals in accordance with "Conditions of the Contract" and Division 1 Submittals Sections. Product data, shop drawings, samples, and similar submittals are defined in "Conditions of the Contract".
B. Product Data: Submit product data for each type storefront series specified.
C. Shop Drawings: Submit shop drawings showing layout, profiles, and product components, including anchorage, accessories, finish colors and textures.
D. Samples: Submit verification samples for colors on actual aluminum substrates indicating full color range expected in installed system.
E. Quality Assurance / Control Submittals.
   1. Drawings and specifications are based upon TRACO TR-7850 Multi-Glaze Storefront System.
   2. Test Reports: Submit certified test reports showing compliance with specified performance characteristics and physical properties.
   3. Manufacturer's Installation Instructions.
F. Closeout Submittals:
   1. Warranty: Submit warranty documents specified herein.
   2. Project Record Documents: Submit project record documents for installed materials in accordance with Division 1 Project Closeout (Project Record Documents) Section.

1.05 QUALITY ASSURANCE

A. Qualifications
   1. Installer Qualifications: Installer experienced (as determined by contractor) to perform work of is section who has specialized in the installation of work similar to that required for this project. If requested by Owner, submit reference list of completed projects.
   2. Manufacturer Qualifications: Manufacturer capable of providing field service representation during construction, approving acceptable installer and approving application method.
B. Pre-installation Meetings: Conduct pre-installation meeting to verify project requirements, substrate conditions, manufacturer's installation instructions, and manufacturer's warranty requirements.

1.06 PROJECT CONDITIONS / SITE CONDITIONS

A. Field Measurements: Verify actual measurements/openings by field measurements before fabrication; show recorded measurements on shop drawings. Coordinate field measurements, fabrication scheduled with construction progress to avoid construction delays.

1.07 WARRANTY

A. Project Warranty: Refer to "Conditions of the Contract" for project warranty provisions.
B. Manufacturer's Warranty: Submit, for Owner's acceptance, manufacturer's standard warranty

Reviewed for Code Compliance
Inspections Division
Approved with Conditions
Date: 10/31/17

document executed by authorized company official. Manufacturer's warranty is in addition to, not a limitation of, other rights Owner may have under the Contract Documents.

PART 2 PRODUCTS

2.01 MANUFACTURERS (Acceptable Manufacturers/Products)

A. Acceptable Manufacturers: TRACO Architectural Systems or Equal

2.02 MATERIALS

A. Extrusions: ASTM B 221, 6063-T5 Aluminum Alloy.
B. Aluminum Sheet:
   1. Anodized Finish: ASTM B 209, 5005-H14 Aluminum Alloy, 0.050 inch (1.27mm) minimum thickness.
   2. Painted Finish: ASTM B 209, 3003-H14 Aluminum Alloy, 0.080 inch (1.95 mm) minimum thickness.
C. Glass
   1. 1" overall thickness
   2. ¼" outer lite- PPG Solarban 60, Low E
   3. ½" air space
   4. ¼" inner lite

Tempered where required by code and as indicated on drawings.

2.03 ACCESSORIES

A. Manufacturer's Standard Accessories:
   1. Fasteners: Zinc plated steel concealed fasteners; Hardened aluminum alloys or AISI 300 series stainless steel exposed fasteners, countersunk, finish to match aluminum color.
   2. Sealant: Silicone Sealant as recommended by Dow Corning, GE or equal.
   3. Glazing: Setting blocks, edge blocks, and spacers in accordance with ASTM C 864, shore durometer
      hardness as recommended by manufacturer: Glazing gaskets in accordance with ASTM ` C 864.

2.04 FABRICATION

A. Shop Assembly: Fabricate and assemble units with joints only at intersection of aluminum members with hairline joints; rigidly secure, and sealed in accordance with manufacturer's recommendations.
   1. Welding: Conceal welds on aluminum members in accordance with AWS recommendations or methods recommended by manufacturer. Members showing welding bloom or discoloration on finish or material distortion will be rejected.

B. Fabrication Tolerance:
   1. Material Cuts: Square to 1/32 inch (0.8 mm) off square, over largest dimension; proportionate amount of 1/32 inch (0.8) mm on the two dimensions.

Reviewed for Code Compliance
Inspections Division
Approved with Conditions
Date: 10/31/17

2. Maximum Offset: 1/64 inch (0.4mm) in alignment between two consecutive members in line, end to end.
3. Maximum Offset: 1/64 inch (0.4 mm) between framing members at glazing pocket corners.
4. Joints (Between adjacent members in same assembly): Hairline and square to adjacent member.
5. Variation (In squaring diagonals for doors and fabricated assemblies): 1/16 inch (1.6 mm).
6. Flatness (For doors and fabricated assemblies): +/- 1/16 inch (1.6 mm) of neutral plane.

2.05 FINISHES AND COLORS

A. Aluminum profiles shall be given a caustic etch followed by an anodic oxide treatment to obtain (specify one of the following).
   1. An Architectural Class I color anodic coating conforming to AA-M12C22A42/44.

PART 3 EXECUTION

3.01 MANUFACTURER'S INSTRUCTIONS / RECOMMENDATIONS

A. Compliance: Comply with manufacturer's product data, including product technical bulletins, product catalog installation instructions, and product carton instructions.

3.02 EXAMINATION

A. Site Verification of Conditions: Verify substrate conditions (which have been previously installed under other sections) are acceptable for product installation in accordance with manufacturer's instructions.

3.03 PREPARATION

A. Adjacent Surface Protection: Protect adjacent work areas and finish surfaces from damage during product installation.

3.04 INSTALLATION

A. General: Install manufacturer's system in accordance with shop drawings, and within specified tolerances.
   1. Protect aluminum members in contact with masonry, steel, concrete, or dissimilar materials using nylatron pads or bituminous coating.
   2. Shim and brace aluminum system before anchoring to structure.
   3. Verify weep holes are open, and metal joints are sealed in accordance with manufacturer's installation instructions.
   4. Seal metal to metal joints using sealant recommended by system manufacturer.

3.05 FIELD QUALITY CONTROL

Reviewed for Code Compliance
Inspections Division
Approved with Conditions
Date: 10/31/17

A. Manufacturer's Field Services: Upon Owner's request, provide manufacturer's field service consisting of product use recommendations and periodic site visit for inspection of product installation in accordance with manufacturer's instructions.
B. Field Test: Conduct field test to determine water tightness of storefront system. Conduct test at locations selected by Architect.

3.06 ADJUSTING AND CLEANING

A. Adjusting: Adjust operating items as recommended by manufacturer.
B. Cleaning: Remove temporary coverings and protection of adjacent work areas. Repair or replace damaged installed products. Clean installed products in accordance with manufacturer's instructions prior to owner's acceptance.
   Remove construction debris from project site and legally dispose of debris.
C. Protection: Protect installed product's finish surfaces from damage during construction.

END OF SECTION

Reviewed for Code Compliance
Inspections Division
Approved with Conditions
Date: 10/31/17

SECTION 08600
POLYVINYL CHLORIDE (PVC) WINDOWS
Paradigm Window Solutions
8371 Geometric Picture Window

PART 1 – GENERAL

1.1 APPLICABLE PUBLICATIONS: The publications listed below form a part of this specification to the extent referenced. The publications are referred to in text by basic designation only.

1.1.1 Federal Specifications (Fed. Spec.):

DD-G-45-1D Glass, Float or Plate, Sheet

1.1.2 American Architectural Manufacturers Association (AAMA);

AAMA 101 I.S.2-97 Voluntary Specification for Aluminum, PVC, and Wood Windows and Glass Doors

Test method for rate of Air Leakage through Exterior windows, Curtain walls and doors (ASTM E283)

Test method for Structural Performance of Exterior Windows, Curtain walls and doors (ASTM E330)

Test method for Water Penetration of Exterior windows, Curtain walls and doors by Uniform Static Air Pressure Difference (ASTM E547)

Specifications for Sealed Insulating Glass Units (ASTM E774)

AAMA 1503-98 Voluntary test method for Condensation Resistance of Windows, Doors, and Glazed wall sections

AAMA 615-02 Voluntary Specification, Performance Requirements, and Test Procedures for Superior Performing Organic Coatings on Plastic Profiles

NFRC 100-97 Procedure for Determining Fenestration Product U-factors
NFRC 200-97 Procedure for Determining Fenestration Product Solar Heat Gain Coefficients
NFRC 400-01 Procedure for Determining Fenestration Product Air Leakage

1.1.3 AAMA Certification Program for Vinyl Window Manufacturers

1.2 SUBMITTALS: Submit to Contracting Officer for Approval.

1.2.1 Certified Test Reports: Submit for air infiltration, water resistance, and uniform loading in accordance with the above referenced specification.

1.2.2 Catalog Data: Shall describe each type of window, hardware, fastener, accessory, operator, screen, and finish. (as applicable)

1.2.3 Certification of Compliance: Submit certificates that equivalent windows have been successfully tested and meet the requirements specified herein for air infiltration and water penetration.

1.3 DELIVERY AND STORAGE: Deliver windows to project site in an undamaged condition. Use care in handling and hoisting during transportation and at the job site. Store windows and components out of contact with the ground, under cover, protected from the weather, so as to prevent damage to the windows. Damaged windows shall be repaired to an “as new” condition or replaced as approved.

Reviewed for Code Compliance
Inspections Division
Approved with Conditions
Date: 10/31/17

1.4 PROTECTION: Finished surfaces shall be protected during shipping and handling using manufacturers standa method.

1.5 CERTIFICATION: Window units shall be tested and certified for performance with the above referenced test methods. All window units shall be labeled certifying conformance with AAMA 101 I.S.2-97 , NFRC 100-97, and Energy Star.

1.6 CERTIFIED FABRICATOR: Windows shall be fabricated by an AAMA Certified Fabricator.

1.7 WARRANTIES:

1.7.1 Windows shall be fully warranted against any defects in material or workmanship under normal use and service for a period of 20 years from date of acceptance on commercial projects and lifetime warranty to original homeowner on residential projects. 5 years factory labor included.

1.7.2 Optional factory-applied exterior paint finish shall be warranted to the original purchaser against adhesive failure, peeling, cracking, or blistering for a period of 10 years when exposed to normal weather conditions. Color retention shall be warranted for the same period to be less than 5 Delta E per ASTM D2244. Change in gloss is not considered a defect.

1.7.3 Insulated Glass Units shall be fully warranted against visual obstruction resulting from film formation or moisture collection between the interior glass surface, excluding breakage, for a period of 20 years from date of acceptance on commercial projects and lifetime warranty to original homeowner on residential projects. 5 years factory labor included.

1.7.4 Contractor shall provide a written service warranty that clearly spells out how requests for service shall be handled, by whom, under whose responsibility and shall include the time frame for handling these service requests. A labor warranty providing service on the windows shall cover a period of not less than 10 years, and shall be provided in writing. A copy of the product and labor warranty must accompany other applicable warranties and be presented with bid.

1.8 PERFORMANCE REQUIREMENTS:

1.8.1 Glazing options to suit specific thermal, visual, or acoustic requirements are available.

1.8.2 Test for air infiltration shall be in accordance with AAMA/NWWDA 101/I.S.2-97 and NFRC 400-01. Test results for different window sizes appear below. Test data subject to change without notice.

1.8.3 Test for water infiltration shall be in accordance with AAMA 101 I.S.2-97. Test results for different window sizes appear below. Test data subject to change without notice.

1.8.4 Uniform Structural Load Test shall be in accordance with AAMA 101 I.S.2-97. Test results for different window sizes appear below. Test data subject to change without notice.

Type	Rating (DP)	Max. Structural Test Pressure[1]	Water Infiltration.[2]	Air Infiltration[3]	Size Tested
F	C50	75.0	12.00	0.01	60 X 60

[1]Structural Test Pressure (psf) tested to at least 150% of DP rating

[2]Water Infiltration (psf) tested to at least 15% of DP rating

[3]Air Infiltration units are scfm/ft^2

1.8.5 Test for Thermal Performance shall be in accordance with NFRC 100-97. Test data subject to change without notice.

Reviewed for Code Compliance
Inspections Division
Approved with Conditions
Date: 10/31/17

1.8.6 Test for Condensation Resistance Factor (CRF) shall be in accordance with AAMA 1503-98. Test data subject change without notice.

PART 2 – PRODUCTS

2.1 MANUFACTURER: Paradigm Geometric Picture Window as manufactured by **Paradigm Window Solutions**, 400 Riverside Industrial Parkway, Portland, ME 04103

2.2 MATERIALS: Windows shall conform to the requirements of specifications listed above. Provide windows of combinations, types and sizes indicated or specified.

2.2.1 Extruded PVC components produced from commercial quality virgin PVC (unplasticised polyvinyl chloride), conforms to AAMA 303 from sections in one piece, straight, true and smooth. Provide multi-chambered PVC extruded frames and sash in accordance with the manufacturers standard practice. Make fusion welded frame joints strong enough to develop full strength of members, with an external wall thickness of .070 ".

2.2.2 Glass and Glazing: Glass shall conform to DD-G-451 and not less than "B" quality. Factory glazed ¾" insulating glass conforming to ASTM-E-774, with Truseal Duraseal seal spacer, manufactured by TruSeal Industries Inc., Cleveland, OH. Glazing shall be integral glazing type system with architectural back bedded glazing tape and designed to maintain a watertight seal between glass and sash frame. Non-standard glass options will have metal box-type spacer with dual seal system.

2.2.3 Factory-applied exterior paint finish to be Royal Spectra-Coat™ as manufactured by Royal Bond Co., Ontario, Canada. Finish may be provided in 24 standard colors, satin finish only, on exterior surfaces as determined by the factory. Finish shall meet the performance requirements specified by AAMA 615-02.

2.3 FABRICATION

2.3.1 Weathering Surfaces: All frame members shall be multi-chambered PVC extrusions utilizing double wall design without the need for reinforcement. Frame corners shall be fusion welded. Sash members shall be multi-chambered PVC extrusions utilizing double wall design at all glazing locations. Horizontal sash members shall be mitered and fusion welded to vertical sash members.

2.3.2 Drips and Weep Holes: Provided as required to return water to the outside.

2.3.3 Glazing Thickness: Design glazed windows and rabbets suitable for glass thickness specified above.

2.3.4 Fasteners: All fasteners are to be stainless steel type, corrosion resistance. Use flathead, cross-recessed type, exposed head screws with standard threads on windows, trim, and accessories. Screw heads shall finish flush with adjoining surfaces. Self-tapping sheet metal screws are not acceptable for material more than 1/16 inch in thickness. All sheetmetal screw fasteners shall penetrate into a screw boss consisting of at least three layers of PVC profile for secure fastening and reduce pull out.

2.3.5 Provisions for Glazing: Design sash for outside double-glazing and for securing glass with manufacturer's standard glazing systems. Provide glazing channels of adequate size and depth to receive and properly support the glass and glazing accessories.

2.3.6 Factory Mulls: Factory mulls to be fully reinforced with extruded aluminum I-beam reinforcement of 6005-T5 alloy and assembled utilizing interior and exterior "U" channels and proprietary sealant application patterns. Reinforcement to be further attached to window frames with .080" x 1.375" x 12" stainless steel straps and appropriate stainless steel fasteners. *NOTE TO SPECIFIER: Remove this section if not applicable.*

2.3.7 Accessories: Provide windows complete with necessary hardware, fastenings, clips, fins, anchors, glazing beads, and other appurtenances necessary for complete installation and proper operation.

Reviewed for Code Compliance
Inspections Division
Approved with Conditions
Date: 10/31/17

PART 3 – EXECUTION

3.1 INSTALLATION

3.1.1 Method of Installation: Install in strict accordance with the window manufacturer's printed instructions and details, except as specified otherwise herein. Install windows without forcing into prepared window openings. Insulate perimeter of window frame with acceptable approved insulation material, as recommended by window manufacturer. Set windows at proper elevation, location, and reveal; plumb, square, level, and in alignment; and brace, strut, and stay properly to prevent distortion and misalignment. Protect ventilators and operating parts against accumulation of dirt, and building materials by keeping ventilators tightly closed and locked to frame. Bed screws in joints at mullions, contacts of windows with sills, built in fins, and sub-frames in approved sealant. Install windows in a manner that will prevent entrance of water. For replacement window installations, provide sill angle flashed in sealant at windowsills.

3.1.2 Anchors and Fasteners: Make ample provision for securing units to each other, and to adjoining construction.

3.1.3 Protection: Where surfaces are in contact with, or fastened to wood, or dissimilar materials, the surface shall be protected from dissimilar materials as recommended by the manufacturer. Surfaces in contact with sealant after installation shall not be coated with any type of protective material.

3.2 CLEANING: Clean interior and exterior of window units of mortar, plaster, paint spattering spots, sealants, and other foreign matter to present a neat clean appearance and to prevent fouling of weather-stripping surfaces and weather-stripping, exterior finish, and to prevent interference with the operation of hardware. Replace with new windows all stained, discolored, or abraded windows that cannot be restored to their original condition.

END OF SECTION

Reviewed for Code Compliance
Inspections Division
Approved with Conditions
Date: 10/31/17

Hardware Sets

258481 : Hampton Inn & Suites

SET #001 - 3068 wd x hm

Doors: U1

3	Hinges	TA2714 4 1/2 X 4 1/2	26D	MC
1	Card Lockset	CARD LOCKSET	26D	CBEM
		NOTE: (PROVIDED AND INSTALLED BY OWNER)		
1	Closer	1461 REG/PA FC TBSRT	AL	LC
1	Secure-A-Latch	SAL 26D		VA01
1	Door Viewer	628	CRM	RO
1	Wall Bumper	409	US32D	RO
1	Threshold w/Transition Strip	CTT 2.75 W/FA/SB X 36"	BLACK	VA01
1	Gasketing	105 CUSH N SEAL 1 x 36 2 x 84	BLACK	VA01
1	Cap Sweep Door Bottom	CS36 AMU-3 X 36"	BLACK	VA01

NOTE: PROVIDE (2) VIEWERS AT HC ROOMS

SET #002 - 3068 wd x wd

Doors: U2

1	Single Back Pull	902.00.710		VA01
1	Sliding Door Hardware	940.64.110		VA01
2	Hafele Door Pulls (SET)	902.00.700 7.5 BTB		VA01
1	Flush Pull	902.01.520		VA01

NOTE: SLIDING BARN DOOR

SET #003 - 3068 wd x hm

Doors: U3

3	Hinges	TA2714 4 1/2 X 4 1/2	26D	MC
1	Privacy Set	S40D NEP 10-001	626	SC
1	Wall Bumper	409	US32D	RO
3	Door Silencers	608	GREY	RO

SET #004 - 4068 1 1/2 Mirror Sliding Doors

Doors: U4

NOTE: ALL HARDWARE BY MIRROR DOOR MANUFACTURER

SET #005 - 3068 wd x hm

Doors: 112, 133, 201, 207, 301, 307, 401, 407

3	Hinges	TA2714 4 1/2 X 4 1/2	26D	MC

CITY OF PORTLAND, MAINE RESURGAM
Reviewed for Code Compliance
Inspections Division
Approved with Conditions
Date: 10/31/17

1	Fire Exit Device	99L-F x 996L-R&V-BE 07	US26D	
1	Closer	4011 REG	AL	
1	Protection Plate	K1050 8" x 34" SS Tek Screws (12)	US32D	
1	Wall Bumper	409	US32D	RO
1	Smoke Seal	S88 D 20'		PE
1	Door Bottom	315 CN 36"		PE
3	Door Silencers	608	GREY	RO

SET #006 - 3068 hm x hm

Doors: 113, 134

1	Continuous Hinge	CFM 83 SLF HD1		PE
1	Rim Exit	LD 99EO	US26D	VO
1	Closer	4111 CUSH MC	AL	LC
1	Protection Plate	K1050 8" x 34" SS Tek Screws (12)	US32D	RO
1	Weatherstrip	45041 CNB 1 x 36" 2 x 84"		PE
1	Weatherstrip	18062 CNB 36"		PE
1	Drip Cap	16 A 40"		NA
1	Threshold	271 A 36"		PE

SET #007 - 3070 al x al

Doors: 142, 144, 146

2	Continuous Hinge	CFM 83 SLF HD1		PE
1	Exit Device	CD 33A-NL-OP x 388NL	US26D	VO
1	Rim Cylinder	20-057 50-231 ICX	626	SC
1	Mortise Cylinder	20-061 50-231 ICX XQ11-948	626	SC
2	Cylinder Core	23-030 50-216-CKC 50-217-VKC	626	SC
1	Electric Strike	6300 FSE	US32D	VO
1	Door Pull	BF157	US32D	RO
1	Closer	4111 SCUSH MC	AL	LC
1	Card Reader	CARD READER		CBEM
		NOTE: (REMOTE CONTROL - PROVIDED AND INSTALLED BY OWNER)		
1	Drip Cap	16 A 40"		NA
1	Door Bottom	315 CN 36"		PE
1	Threshold	271 A 36"		PE
1	Power Supply	PS902		VO

NOTE: BALANCE OF HARDWARE BY DOOR SUPPLIER

SET #008 - 3068 wd x hm

Doors: 155, 127

3	Hinges	TA2714 4 1/2 X 4 1/2	26D	MC
1	Card Lockset	CARD LOCKSET	26D	CBEM
		NOTE: (PROVIDED AND INSTALLED BY OWNER)		
1	RA Hold Closer	4011 H TBSRT	AL	LC
1	Protection Plate	K1050 8" x 34" SS Tek Screws (12)	US32D	RO
1	Door Viewer	628	CRM	RO
1	Smoke Seal	S88 D 17'		PE

Reviewed for Code Compliance
Inspections Division
Approved with Conditions
Date: 10/31/17

SET #009

Doors:

NOTE: NOT USED

SET #010 - 3070 al x al

Doors: 143, 145, 147

NOTE: BALANCE OF HARDWARE BY ALUM DOOR SUPPLIER

SET #011 - 3068 wd x hm

Doors: , 108, 122, 141, 304, 404

3	Hinges	TA2714 4 1/2 X 4 1/2	26D	MC
1	Lockset	L9080T 07A 50-231 ICX	626	SC
1	Cylinder Core	23-030 50-216-CKC 50-217-VKC	626	SC
1	Closer	4011 REG	AL	LC
1	Protection Plate	K1050 8" x 34" SS Tek Screws (12)	US32D	RO
1	Dome Stop	441H	US26D	RO
1	Smoke Seal	S88 D 20'		PE

SET #012 - 3068 hm x hm

Doors: 151, 148

3	HInges	TA2314 4 1/2 X 4 1/2 NRP	26D	MC
1	Lockset	L9080T 07A 50-231 ICX	626	SC
1	Cylinder Core	23-030 50-216-CKC 50-217-VKC	626	SC
1	Closer	4011 REG	AL	LC
1	Protection Plate	K1050 8" x 34" SS Tek Screws (12)	US32D	RO
1	Weatherstrip	45041 CNB 1 x 36" 2 x 84"		PE
1	Weatherstrip	18062 CNB 36"		PE
1	Threshold	271 A 36"		PE

SET #013 - 3068 wd x hm

Doors: 116, 130, 131, 139

3	Hinges	TA2714 4 1/2 X 4 1/2	26D	MC
1	Privacy Set	L9040 07A	626	SC
1	Closer	4011 REG	AL	LC
1	Protection Plate	K1050 8" x 34" SS Tek Screws (12)	US32D	RO
1	Dome Stop	441H	US26D	RO
1	Smoke Seal	S88 D 20'		PE
3	Door Silencers	608	GREY	RO

SET #014 - 3068 wd x hm

Reviewed for Code Compliance
Inspections Division
Approved with Conditions
Date: 10/31/17

Doors: 103, 109

3	Hinges	TA2714 4 1/2 X 4 1/2	26D	MC
1	Card Lockset	CARD LOCKSET	26D	CBEM
		NOTE: (PROVIDED AND INSTALLED BY OWNER)		
1	Closer	4111 EDA MC	AL	LC
1	Protection Plate	K1050 8" x 34" SS Tek Screws (12)	US32D	RO
1	Dome Stop	441H	US26D	RO
1	Door Viewer	628	CRM	RO
1	Smoke Seal	S88 D 17'		PE
3	Door Silencers	608	GREY	RO

SET #015 - 3068 wd x hm

Doors: 152, 153, 154, 106

3	Hinges	TA2714 4 1/2 X 4 1/2	26D	MC
1	Lockset	L9050T 07A 50-231 ICX	626	SC
1	Cylinder Core	23-030 50-216-CKC 50-217-VKC	626	SC
1	Dome Stop	441H	US26D	RO
1	Smoke Seal	S88 D 17'		PE

SET #016 - 3068 al x al

Doors: 124

3	Hinges	TA2714 4 1/2 X 4 1/2	26D	MC
1	Lockset	L9080T 07A 50-231 ICX	626	SC
1	Cylinder Core	23-030 50-216-CKC 50-217-VKC	626	SC
1	Electric Strike	6300 FSE	US32D	VO
1	Closer	4011 REG	AL	LC
1	Protection Plate	K1050 8" x 34" SS Tek Screws (12)	US32D	RO
1	Dome Stop	441H	US26D	RO
1	Card Reader	CARD READER		CBEM
		NOTE: (REMOTE READER - PROVIDED AND INSTALLED BY OWNER)		

SET #017 - 3068 hm x hm

Doors: 120

3	Hinges	TA2314 4 1/2 X 4 1/2	32D	MC
1	Lockset	L9080T 07A 50-231 ICX	626	SC
1	Cylinder Core	23-030 50-216-CKC 50-217-VKC	626	SC
1	Closer	4111 HEDA SRI	AL	LC
1	Protection Plate	K1050 36" x 34" SS Tek Screws (22)	US32D	RO
1	Dome Stop	441H	US26D	RO
1	Smoke Seal	S88 D 20'		PE
1	Door Bottom	315 CN 36"		PE
3	Door Silencers	608	GREY	RO

SET #018 - 3068 wd x hm

Reviewed for Code Compliance
Inspections Division
Approved with Conditions
Date: 10/31/17

Doors: 209, 107, 118, 126, 129, 132, 137, 203, 205, 303, 305, 306, 403, 405, 406

3	Hinges	TA2714 4 1/2 X 4 1/2	26D	MC
1	Lockset	L9080T 07A 50-231 ICX	626	SC
1	Cylinder Core	23-030 50-216-CKC 50-217-VKC	626	SC
1	Closer	4011 REG	AL	LC
1	Protection Plate	K1050 8" x 34" SS Tek Screws (12)	US32D	RO
1	Dome Stop	441H	US26D	RO
1	Smoke Seal	S88 D 17'		PE
3	Door Silencers	608	GREY	RO

SET #019 - 3068 wd x hm

Doors: 206

3	Hinges	TA2714 4 1/2 X 4 1/2	26D	MC
1	Card Lockset	CARD LOCKSET	26D	CBEM
		NOTE: (PROVIDED AND INSTALLED BY OWNER)		
1	Closer	4011 REG	AL	LC
1	Protection Plate	K1050 8" x 34" SS Tek Screws (12)	US32D	RO
1	Dome Stop	441H	US26D	RO
1	Smoke Seal	S88 D 17'		PE
3	Door Silencers	608	GREY	RO

SET #020 - 3068 wd x hm

Doors: 104

3	Hinges	TA2714 4 1/2 X 4 1/2	26D	MC
1	Card Lockset	CARD LOCKSET	26D	CBEM
		NOTE: (PROVIDED AND INSTALLED BY OWNER)		
1	Closer	1461 REG FC	AL	LC
1	Dome Stop	441H	US26D	RO
1	Smoke Seal	S88 D 17'		PE
3	Door Silencers	608	GREY	RO

SET #021 - 3068 wd x hm

Doors: 115, 117

3	Hinges	TA2714 4 1/2 X 4 1/2	26D	MC
1	Passage Set	L9010 07A	626	SC
1	Closer	4011 REG	AL	LC
1	Protection Plate	K1050 8" x 34" SS Tek Screws (12)	US32D	RO
1	Dome Stop	441H	US26D	RO
3	Door Silencers	608	GREY	RO

SET #022 - 5068 wd x hm

Doors: 128

6	Hinges	TA2714 4 1/2 X 4 1/2	26D	MC
2	Flush Bolts	557	US26D	RO
1	Lockset	L9080T 07A 50-231 ICX	626	SC

CITY OF PORTLAND, MAINE RESURGAM
Reviewed for Code Compliance
Inspections Division
Approved with Conditions
Date: 10/31/17

1	Cylinder Core	23-030 50-216-CKC 50-217-VKC	626	[illegible]
1	Closer	1461 REG/PA FC TBSRT	AL	[illegible]
2	Protection Plate	K1050 8" x 30" SS Tek Screws (12)	US32D	[illegible]
2	Dome Stop	441H	US26D	RO
1	Smoke Seal	S88 D 20'		PE
2	Door Bottom	315 CN 30"		PE
2	Door Silencers	608	GREY	RO

SET #023 - 3068 wd x hm

Doors: 119

3	Hinges	TA2714 4 1/2 X 4 1/2	26D	MC
1	Passage Set	L9010 07A	626	SC
1	Closer	4011 REG	AL	LC
1	Dome Stop	441H	US26D	RO
3	Door Silencers	608	GREY	RO

SET #024 - 3068 wd x hm

Doors: 125

3	Hinges	TA2714 4 1/2 X 4 1/2	26D	MC
1	Card Lockset	CARD LOCKSET	26D	CBEM
		NOTE: (PROVIDED AND INSTALLED BY OWNER)		
1	Closer	4011 REG	AL	LC
1	Protection Plate	K1050 8" x 34" SS Tek Screws (12)	US32D	RO
1	Dome Stop	441H	US26D	RO
1	Smoke Seal	S88 D 17'		PE
3	Door Silencers	608	GREY	RO

SET #025 - 5068 hm x hm

Doors: 140, 149

6	Hinges	TA2314 4 1/2 X 4 1/2	32D	MC
2	Flush Bolts	555	US26D	RO
1	Lockset	L9080T 07A 50-231 ICX	626	SC
1	Cylinder Core	23-030 50-216-CKC 50-217-VKC	626	SC
1	Closer	4011 REG	AL	LC
2	Protection Plate	K1050 8" x 30" SS Tek Screws (12)	US32D	RO
2	Dome Stop	441H	US26D	RO
1	Smoke Seal	S88 D 20'		PE
2	Door Bottom	315 CN 36"		PE

SET #026 - 3068 al x al

Doors: 148A

3	Hinges	TA2314 4 1/2 X 4 1/2	32D	MC
1	Card Lockset	CARD LOCKSET	26D	CBEM
		NOTE: (PROVIDED AND INSTALLED BY OWNER)		
1	Closer	4011 REG	AL	LC
1	Protection Plate	K1050 8" x 34" SS Tek Screws (12)	US32D	RO
1	Dome Stop	441H	US26D	RO

Reviewed for Code Compliance
Inspections Division
Approved with Conditions
Date: 10/31/17

1	Smoke Seal	S88 D 17'		
1	Door Bottom	315 CN 36"		
1	Threshold	271 A 36"		

NOTE: DOOR TO POOL

SET #027 - Sliding Alum Doors

Doors: 101

1	By Others	REMOTE CONTROL UNIT		VA01
		NOTE: (PROVIDED AND INSTALLED BY OTHERS)		
1	Cylinder Core	23-030 50-216-CKC 50-217-VKC	626	SC
1	Mortise Cylinder	20-061 50-231 ICX	626	SC

NOTE: BALANCE OF HARDWARE BY ALUM DOOR SUPPLIER

SET #028 - SLIDING ALUM DOORS

Doors: 102

1	Cylinder Core	23-030 50-216-CKC 50-217-VKC	626	SC
1	Mortise Cylinder	20-061 50-231 ICX	626	SC

NOTE: BALANCE OF HARDWARE BY ALUM DOOR SUPPLIER

SET #029 - 3068 wd x hm

Doors: U5

6	Hinges	TA2714 4 1/2 X 4 1/2	26D	MC
2	Deadbolt	B680	626	SC
2	Exit Lock	AL25D SAT 10-025	626	SC
2	Secure-A-Latch	SAL 26D		VA01
2	Gasketing	105 CUSH N SEAL 1 x 36 2 x 84	BLACK	VA01
2	Cap Sweep Door Bottom	CS36 AMU-3 X 36"	BLACK	VA01
2	Threshold w/Transition Strip	CTT 2.75 W/FA/SB X 36"	BLACK	VA01

SET #030

Doors: 114

3	Hinges	TA2714 4 1/2 X 4 1/2	26D	MC
1	Exit Device	99L-F x 996L-R&V-BE 07	US26D	VO
1	Closer	4111 EDA MC	AL	LC
1	Protection Plate	K1050 8" x 34" SS Tek Screws (12)	US32D	RO
1	Wall Bumper	409	US32D	RO
1	Smoke Seal	S88 D 17'		PE
1	Door Bottom	315 CN 36"		PE

SET #ZZ1

Doors: KEYING

258481 : Hampton Inn & Suites

6	Cut Master Key	49-009	
6	Construction Key	48-101-ICX	
2	Control Key	48-056-ICX	
1	Bitting List	50-123	SC
2	Cut Control Key	49-003	SC

CITY OF PORTLAND, MAINE RESURGAM
Reviewed for Code Compliance
Inspections Division
Approved with Conditions
Date: 10/31/17

Reviewed for Code Compliance
Inspections Division
Approved with Conditions
Date: 10/31/17

SECTION 08800

GLAZING

PART 1 GENERAL

1.1 SUMMARY

A. Section Includes:
1. Clear tempered glass.

B. Related Sections:
1. Section 08410 - Aluminum Storefronts: Glazed doors and storefront windows.

1.2 REFERENCES

A. American National Standards Institute (ANSI):
1. ANSI Z97.1 - Safety Performance Specifications and Methods of Test for Safety Glazing Material Used in Buildings.

B. American Society for Testing and Materials (ASTM):
1. ASTM C920 - Standard Specification for Elastomeric Joint Sealants.
2. ASTM C1036 - Standard Specification for Flat Glass.
2. ASTM C1048 - Standard Specification for Heat-Treated Flat Glass-Kind HS, Kind FT Coated and Uncoated Glass.
3. ASTM D2000 - Standard Classification System for Rubber Products in Automotive Applications.

C. Consumer Product Safety Standards for Architectural Glazing. CPSC 16 CFR, Part 1201.

D. Flat Glass Marketing Association (FGMA):
1. FGMA - Glazing Manual and Glazing Sealing Systems Manual.

1.3 SUBMITTALS

A. Procedures for submittals.
1. Product Data:
   a. Glass: Structural, physical and environmental characteristics, size limitations, special handling or installation requirements.
   b. Glazing compound: Provide chemical, functional, and environmental characteristics, limitations, special application requirements.
2. Samples:
   a Glazing: Submit one sample 12 x 12 inches (300 x 300 mm) in size of each type of glazing, illustrating tinting, and finish of glazing materials. Label each sample indicating kind, quality and manufacturer.
3. Assurance/Control Submittals:
   a. Certificates: Manufacturer's certificate that Products meet or exceed specified requirements.
   b. Qualification Documentation: Submit documentation of experience indicating compliance with specified qualification requirements.

Reviewed for Code Compliance
Inspections Division
Approved with Conditions
Date: 10/31/17

1.4 QUALITY ASSURANCE

A. Identification: Each unit of tempered glass shall be permanently identified by the manufacturer. The identification shall be etched or ceramic fired on the glass and be visible when the unit is glazed.

B. Perform Work in accordance with FGMA Glazing Manual.

C. Installer Qualifications: Company specializing in performing the Work of this Section with minimum 5 years documented experience.

1.5 DELIVERY, STORAGE, AND HANDLING

A. Transport, handle, store, and protect Products.

1.6 PROJECT CONDITIONS OR SITE CONDITIONS

A. Environmental Requirements:
1. Do not install glazing when ambient temperature is less than 40 degrees F.
2. Maintain minimum ambient temperature before, during and 24 hours after installation of glazing compounds.

1.7 WARRANTY

A. Procedures for closeout submittals.

B. Special Warranty:
1. Include coverage for cracking, breakage, and replacement of same.
   a. Warranty Period: 1 year.
2. Include coverage for sealed glass units from seal failure, interpane dusting or misting, and replacement of same.
   a. Warranty Period: 10 years.

PART 2 PRODUCTS

2.1 MANUFACTURERS

A. Subject to compliance with project requirements, manufacturer's offering Products which may be incorporated in the Work include the following:
1. Falconer Glass Industries.
2. Libbey-Owens-Ford Company, Toledo, OH (800) 526-6557.
3. PPG Industries, Pittsburgh, PA (412) 434-2858.
4. Viracon, Owatonna, MN (800) 533-2080.

B. Product options and substitutions. Substitutions: Permitted.

2.2 GLASS MATERIALS

A. Glass Type 1 - Clear Tempered Insulated Glass Units, Low E: Double pane units of clear tempered glass.
1. Glass Thickness, Inner: 5/16 inch.
2. Glass Thickness, Outer: 5/16 inch.
3. Unit Thickness: 1 inch (25 mm) thick units.

B. Glass Type 2 - Clear Tempered Glass Units. Single pane units with clear tempered glass.
1. Glass Thickness, Inner: 1/4 inch (6 mm).

Reviewed for Code Compliance
Inspections Division
Approved with Conditions
Date: 10/31/17

2.3 GLAZING COMPOUNDS

A. Polysulphide Sealant: Two component, chemical curing, non-sagging type; cured Shore A hardness of 15-25.

B. Silicone Sealant: Single component, chemical curing; capable of water immersion without loss of properties; non-bleeding, non-staining; cured Shore A hardness of 15-25.
   1. Color: Clear.

C. Acrylic terpolymer compounded especially for glazing; non-hardening, non-staining, and non-bleeding.

2.4 GLAZING ACCESSORIES

A. Setting Blocks: Resilient blocks of 70 to 90 Shore A durometer hardness; compatible with glazing sealant.

B. Spacers: Resilient blocks of 40 to 50 Shore A durometer hardness; self adhesive on one side; compatible with glazing sealant.

C. Filler Rods: Closed cell or jacketed foam rods of polyethylene, butyl, neoprene, polyurethane, or vinyl; compatible with glazing sealant.

D. Joint Cleaners, Primers, and Sealers: As recommended by glazing sealant manufacturer.

E. Gaskets: ASTM D2000, SBC 415 to 3BC 620; extruded or molded neoprene or EPDM, black.

F. Mastic: Non-solvent type adhesive as recommended by mirrored glass manufacturer.

PART 3 EXECUTION

3.1 EXAMINATION

A. Section 01700 - Execution Requirements: Verification of existing conditions before starting work.

B. Verification of Conditions: Verify that field measurements, surfaces, substrates and conditions are as required, and ready to receive Work.
   1. Verify that openings for glazing are correctly sized and within tolerance.
   2. Verify that surfaces of glazing channels or recesses are clean, free of obstructions that may impede moisture movement, weeps are clear, and ready to receive glazing.

C. Report in writing to Architect prevailing conditions that will adversely affect satisfactory execution of the Work of this Section. Do not proceed with Work until unsatisfactory conditions have been corrected.

D. By beginning Work, Contractor accepts conditions and assumes responsibility for correcting unsuitable conditions encountered at no additional cost to the Owner.

3.2 PREPARATION

A. Clean contact surfaces with solvent and wipe dry.

B. Seal porous glazing channels or recesses with substrate compatible primer or sealer.

C. Prime surfaces scheduled to receive sealant.

Reviewed for Code Compliance
Inspections Division
Approved with Conditions
Date: 10/31/17

3.3 GLAZING

A. Install glazing from interior only. No exterior glazing permitted. No glazing removal permitted from exterior.

B. Locate setting blocks at quarter points of sill; set in sealant if heel or toe bead is required.

C. Install spacers inside and out except where preshimmed tape or glazing gaskets are to be used.

D. Set each piece in a series to other pieces in pattern draw, bow, or other visually perceptible characteristics.

E. Provide glazing sealants and gaskets as required for particular glazing application. Coordinate with other Sections for material compatibility.

F. Gaskets:
   1. Provide adequate anchorage, particularly for driven-in wedge gaskets.
   2. Miter and weld ends of channel gaskets at corners to provide continuous gaskets.
   3. Seal face gaskets at corners with sealant to close opening and prevent withdrawal of gaskets from corners.

G. Do not leave voids in glazing channels except as specifically indicated or recommended by glass manufacturer. Force sealant into channel to eliminate voids. Tool exposed surfaces to slight wash away from joint. Trim and clean promptly.

H. Do not allow sealant to close weeps of aluminum framing.

I. Provide filler rod where sealants are used in the following locations:
   1. Head and jamb channels.
   2. Colored glass over 75 united inches in size.
   3. Clear glass over 125 united inches in size.

3.4 CONSTRUCTION

A. Interface with Other Work: Coordinate glazing with installation of entrances and storefronts specified in Section 08400.

3.5 FIELD QUALITY CONTROL

A. Inspect preparation and installation of glass.

3.6 CLEANING

A. Remove glazing materials from finish surfaces.

B. Remove labels after Work is complete.

C. Clean glass and adjacent surfaces.

3.7 PROTECTION

A. After installation, mark pane with an 'X' by using removable plastic tape or paste.

END OF SECTION

Reviewed for Code Compliance
Inspections Division
Approved with Conditions
Date: 10/31/17

SECTION 09250

GYPSUM BOARD

1. GENERAL

1.1 REFERENCES:

A. Drawings and general provisions of Contract, including General Conditions and Division 1 specifications, apply to work in this section.

B. NOTE: Selection of Finish colors and patterns in overall color scheme to be made by Architect. Contractor to notify Architect prior to commencing Gypsum Board work, to allow adequate time for color selections, Owner's approval and material ordering lead time.

C. Related Sections:

1. Section 07 84 00 (07840) - Firestopping
2. Section 07 92 00 (07920) – Joint Sealants
3. Section 09 21 16 (09260) - Gypsum Board Assemblies
4. Section 09 90 00 (09900) – Painting

1.2 DESCRIPTION OF WORK: The extent of work shall be as shown on Drawings and called for in these Specifications. Performance shall meet the requirements of these Specifications. The work covered by this section of Specifications consists of the following:

A. Drywall installation as required by Drawings and noted in these Specifications.
B. Taping and finishing all walls and ceilings, except where other kind of finish is specified.

2. PRODUCTS

2.1 NOTE: GWB types are shown as U.S.G. brand names “Sheetrock”, “Firecode”, “Firecode C”, “M.R. Board” and “Shaftwall”. Substitutions must have equal U.L. and STC ratings. See Drawings for Specific assembly.

2.2 EXTERIOR & INTERIOR WALLS & CEILINGS: See rated & non rated assemblies and wall types on the drawings.

2.3 NOTE: Type M.R. in bathrooms.

2.4 RESILIENT CHANNEL: USG-RC-1

2.5 Minimum drywall thickness for walls or ceilings shall be 1/2 inch or as indicated on the drawings. If support member spacing exceeds 16” on center the minimum thickness shall be 5/8 inch.

Reviewed for Code Compliance
Inspections Division
Approved with Conditions
Date: 10/31/17

3. EXECUTION

3.1 THE DRYWALL CONTRACTOR shall inspect all areas affected by his work to ascertain that all work is complete and has been accepted. Defective installations shall be corrected before finished surfaces are painted or sprayed with acoustical material.

3.2 DRYWALL INSTALLATION. Install drywall as shown on plans, noted in the UL Specifications, and as set forth in U.S.G. Handbook. Installation of non-UL rated drywall assemblies on steel studs shall comply with the following minimum requirements:

A. Spacing for attachment members shall not exceed 24" o.c. for walls and 16" o.c. for ceilings. All drywall shall be screwed with approved drywall screws made specifically for the purpose and of length adequate for wall types. On walls, screws shall not be placed more than 16" apart for 16" o.c. framing or 12" apart for 24" o.c. framing. Screw all edges 12" o.c. maximum.
B. The drywall contractor may use a few drywall nails to temporarily secure a sheet of drywall before securing with drywall screws. In this event, the drywall nails must be countersunk prior to taping. Corner beads shall be used on all corners and casing beads used whenever Gypsum Board abuts dissimilar material. Caulking to also be applied at these junctions. At all party and unit/corridor walls, Gypsum Board to be set in caulking (for sound).
C. Drywall shall be laid vertically or horizontally. No tapered joints at floor base.
D. Note: Gypsum board to be installed behind all tubs and shower units which results in double gypsum board on some bathroom walls. See bathroom drawing sheet.
E. Provide 1/4” to 1/2” open joint base and where drywall meets wood ceilings at unit demising walls, exterior walls, and corridor walls for air sealant.
F. Ceiling suspension system:

1. Space hangers not over 48 in. o.c. in direction of main runner channels, and within 6 in. of ends of main runner runs and of boundary walls, structural steel, partitions, and similar interruptions of ceiling continuity. Install additional hangers at ends of each suspension member and at ceiling equipment not separately suspended, 6 in. from vertical surfaces. Do not splay wires more than 5 in. in a 4 ft. vertical drop. Wrap wire a minimum of three times horizontally, turning ends upward.
2. Attach hangers directly to ceiling structure, or to supplementary framing members supplied and installed under this section. Hangers may not be suspended from mechanical or electrical equipment such as ductwork, conduit or piping.
3. Install 1-1/2 in. main runner channels spaced not over 48 in. o.c. within 6 in. of wall. Position channels for proper ceiling height, level and secure, with hanger wire saddle-tied along channel. Provide 1 in. clearance between runners and abutting walls and partitions. At channel splices, interlock flanges, overlap ends 12 in., and secure each end with double-strand 18 ga. tie wire.
4. Erect 3/4 in. metal furring channels at right angles to main runner channels or main support members. Space furring not over 16 in. o.c., and within 6 in. of wall. Provide 1 in. clearance between furring ends and abutting walls and partitions. Secure furring to carrying channels with clips or saddle-tie to supports with double strand 18 ga. tie wire. At splices, next furring channels at least 8 double-strand 18 ga. tie wire.

Reviewed for Code Compliance
Inspections Division
Approved with Conditions
Date: 10/31/17

5. At openings interrupting main or furring channels, install additional cross-reinforcir as required, to restore lateral stability of ceiling framing system.
6. Finished installations shall be level to within ¼ in. in 10 ft.

3.3 ON SURFACES TO BE PAINTED: tape and cement all joints and screw locations with three coats of compound, then sand to smooth finish, acceptable to paint.

3.4 DURING WORK PROGRESS, remove all excess materials and debris resulting from operations, which may disrupt the work of other trades and after completion leave the premises broom clean.

END OF SECTION

Reviewed for Code Compliance
Inspections Division
Approved with Conditions
Date: 10/31/17

SECTION 09260

GYPSUM BOARD CEILING ASSEMBLIES ON METAL FRAMING

PART 1 - GENERAL

1.1 SUMMARY

A. Description of Work: Work of this section includes, but is not limited to, the following:
   1. Metal suspension systems

1.2 RELATED WORK SPECIFIED ELSEWHERE

A. See Section 09900 PAINTING AND FINISHING for gypsum board prime and finish coats.

1.3 SUBMITTALS

A. Product Data: Submit manufacturer's specifications and installation instructions with project conditions and materials clearly identified or detailed for each required system.

1.4 SYSTEM REQUIREMENTS

A. Performance Requirements: Fabricate and install systems as indicated but not less than that required to comply with ASTM C754 under the following conditions:
   1. Interior suspended ceilings and soffits: Maximum deflection of l/360 of distance between supports.
   2. Nonstructural components that are permanently attached to structures and their support attachments, shall be designed and constructed to resist the effects of earthquake motions in accordance to local jurisdiction.

B. Fire Resistance Ratings: Where fire resistance classifications are indicated, provide materials and application procedures identical to those listed by UL or tested according to ASTM E119 for type of construction shown.

C. Acoustical Ratings: Where sound ratings are indicated, provide materials and application procedures identical to those tested by manufacturer to achieve Sound Transmission Class (STC) scheduled or indicated in accordance with ASTM E90.

1.5 QUALITY ASSURANCE

A. Reference Standards:
   1. Applicable requirements of ASTM C754 for installation of steel framing.
   2. Install gypsum board in accordance with applicable requirements and recommendations of Gypsum Association GA 216, "Recommended Specifications for the Application and Finishing of Gypsum Board" except for more stringent requirements of manufacturer.
   3. Apply acoustical sealant in accordance with applicable requirements of ASTM C919.

Reviewed for Code Compliance
Inspections Division
Approved with Conditions
Date: 10/31/17

1.6 DELIVERY, STORAGE AND HANDLING

A. Delivery:
1. Deliver material to site promptly without undue exposure to weather.
2. Deliver in manufacturer's unopened containers or bundles, fully identified with name, brand, type and grade.

B. Storage:
1. Store above ground in dry, ventilated space.
2. Protect materials from soiling, rusting and damage.

1.7 PROJECT CONDITIONS

A. Environmental Requirements:
1. Do not install gypsum board when ambient temperature is below 40°F.
2. For adhesive attachment of gypsum board, and for finishing of gypsum board, maintain ambient temperature above 55°F from one week prior to attachment or joint treatment, and until joint treatment is complete and dry.

PART 2 - PRODUCTS

2.1 PRODUCTS AND MANUFACTURERS

A. Gypsum Board and Accessories: Listed products establish standard of quality and are manufactured by United States Gypsum Company (USG), Chicago, IL. Or approved equal.

B. Steel Framing and Furring: Company acceptable to installer.

C. Grid Suspension Systems: Chicago Metallic or approved equal.

2.2 BOARD MATERIALS

A. Gypsum Board:
1. ASTM C1396 (Section 5), see ceiling types.

2.3 METAL FRAMING AND FURRING MATERIALS

A. Metal Studs and Runners:
1. ASTM C645, "C" shaped, gauge:
   a. Provide gauge as indicated for studs; runner gauge as recommended by stud manufacturer.
   b. Provide runner gauge as recommended by stud manufacturer.
2. Depth of sections: As indicated.
3. Corrosion protection: G40 hot-dipped galvanized coating per ASTM A525.

B. Metal Furring Channels:
1. Hat-shaped:
   a. ASTM C645, 7/8 inch high, 25 gauge, with G40 hot-dipped galvanized coating per ASTM A525.
   b. Provide 20 gauge at furring to receive tile backer board.
   c. Acceptable products: DWC-25 for ½" and 5/8" gypsum board and DWC-20 by USG.

Reviewed for Code Compliance
Inspections Division
Approved with Conditions
Date: 10/31/17

2. Z-shaped: ASTM C645, depths as indicated, 24 gauge minimum, with G40 h dipped galvanized coating per ASTM A525.
3. Resilient: Manufacturer's standard type designed to reduce sound transmission; 1/2 inch deep, 25 gauge steel with G40 hot-dipped galvanized coating per ASTM A525.

PART 3 - EXECUTION

3.1 EXAMINATION

A. Examine substrates and adjoining construction and conditions under which work is to be installed. Do not proceed with work until unsatisfactory conditions are corrected.

3.2 GENERAL INSTALLATION REQUIREMENTS

A. Install in accordance with reference standards and manufacturer's instructions [and as required to comply with seismic requirements].

3.3 METAL SUPPORT INSTALLATION

A. Ceiling and Soffit Support Systems:
1. Secure hangers or rods to structural support by connecting directly to structure where possible; otherwise connect to inserts, clips or other anchorage devices or fasteners indicated.
2. Space main runners, hangers and furring according to requirements of ASTM C754, except as otherwise indicated.
3. Where spacing of structural members, or width of ducts or other equipment, prevents regular spacing of hangers, provide supplemental hangers and suspension members and reinforce nearest affected hangers to span extra distance.
4. Install compression posts, splay wires and other accessories as required to comply with seismic requirements.
5. Extend runners to within 6 inches of walls.
6. Wire-tie or clip furring members to main runners and to other structural supports indicated. In fire resistance rated assemblies, wire-tie furring members; do not clip.

END OF SECTION

Reviewed for Code Compliance
Inspections Division
Approved with Conditions
Date: 10/31/17

SECTION 09265

GYPSUM BOARD SHAFT WALL ASSEMBLIES

PART 1 GENERAL

1.01 SUMMARY

A. Section Includes:

1. Shaft Enclosures

B. Related Sections:

1. Section 07 84 00 (07480) – Firestopping
2. Section 07 92 00 (07920) – Joint Sealants
3. Section 09 21 16 (09250) – Gypsum Board Assemblies
4. Section 09 90 00 (09900) – Painting

1.02 DEFINITIONS

A. Gypsum Board Construction Terminology: Refer to ASTM C11 for definitions of terms for gypsum board construction not defined in this Section or in other referenced standards.

1.03 PERFORMANCE REQUIREMENTS

A. Structural Performance:

1. Provide gypsum board shaft-wall assemblies capable of withstanding the full air-pressure loads indicated for maximum heights of partitions without failing and while maintaining an airtight and smoke-tight seal. Evidence of failure includes deflections exceeding limits indicated, bending stresses causing studs to break or to distort, and end-reaction shear causing track (runners) to bend or to shear and studs to become crippled.

1.04 SUBMITTALS

A. Submit “Letter of Conformance” in accordance with Section 01 33 00 (01330) with the following supporting data:

1. Product Data: For each gypsum board shaft-wall assembly indicated.
2. Complete system design

1.05 QUALITY ASSURANCE

A. Fire-Resistance-Rated Assemblies: Provide materials and construction identical to those tested in assembly indicated according to ASTM E119 by an independent testing and inspecting agency acceptable to authorities having jurisdiction.

1. Fire-Resistance-Rated Assemblies: Indicated by design designations from FMG's "Approval Guide, Building Products" and UL's "Fire Resistance Directory."

B. STC-Rated Assemblies: For gypsum board shaft-wall assemblies indicated to have STC ratings, provide assembly materials and construction complying with requirements of assemblies whose STC ratings were determined according to ASTM E90 and classified according to ASTM E413 by a qualified independent testing agency.

Reviewed for Code Compliance
Inspections Division
Approved with Conditions
Date: 10/31/17

1.06 DELIVERY, STORAGE, AND HANDLING

A. Deliver materials in original packages, containers, and bundles bearing brand name and identificat of manufacturer or supplier.

B. Store materials inside under cover and keep them dry and protected against damage from weather, direct sunlight, surface contamination, corrosion, construction traffic, and other causes. Stack gypsum panels flat on leveled supports off the ground to prevent sagging.

1.07 PROJECT CONDITIONS

A. Comply with requirements for environmental conditions, room temperatures, and ventilation specified in Section 09 21 16 (09255) - Gypsum Board Assemblies.

PART 2 PRODUCTS

2.01 MANUFACTURERS

1. United States Gypsum Co. or equal

2.02 ASSEMBLY MATERIALS

A. General: Provide materials and components complying with requirements of fire-resistance-rated assemblies indicated.

1. Provide panels in maximum lengths available to eliminate or minimize end-to-end butt joints.
2. Provide auxiliary materials complying with gypsum board shaft-wall assembly manufacturer's written recommendations.

B. Steel Framing: ASTM C 645.

1. Protective Coating: ASTM A653, G40, hot-dip galvanized coating

C. Gypsum Shaft-Liner Panels:

1. "Sheetrock Brand Gypsum Liner Panels - Enhanced"; United States Gypsum Co
2. Type “X”, 1” thick water resistant gypsum core surfaced with coated glass mat facings that resist growth of mold and mildew and does not support fungus growth per ASTM D3273 "Standard Test Method for Resistance to Growth of Mold on the Surface of Interior Coatings in an Environmental Chamber".

D. Gypsum Wallboard: ASTM C36, core type as required by fire-resistance-rated assembly indicated.

1. Refer to Section 09255 (09 21 16) - Gypsum Board Assemblies

E. Accessories: Cornerbead, edge trim, and control joints of material and shapes specified in Section 09255 (09 21 16) - Gypsum Board Assemblies, that comply with gypsum board shaft-wall assembly manufacturer's written recommendations for application indicated.

F. Gypsum Wallboard Joint-Treatment Materials: ASTM C475 and as specified in Section 09255 (09 21 16) - Gypsum Board Assemblies.

G. Steel Drill Screws: ASTM C1002, unless otherwise indicated.

1. Use screws complying with ASTM C954 for fastening panels to steel members from 0.033 to 0.112 inch thick.

H. Track (Runner) Fasteners: Power-driven fasteners of size and material required to withstand loading conditions imposed on shaft-wall assemblies without exceeding allowable design stress of track, fasteners, or structural substrates in which anchors are embedded.

Reviewed for Code Compliance
Inspections Division
Approved with Conditions
Date: 10/31/17

I. Acoustical Sealant: As specified in Section 09 21 16 (09250) - Gypsum Board Assemblies.

2.03 GYPSUM BOARD SHAFT WALL

A. Basis-of-Design Product: As indicated on Drawings by design designation of a qualified testing and inspecting agency.

B. Deflection Limit: L/360

C. Steel Framing: Manufacturer's standard profile for repetitive members and corner and end members and for fire-resistance-rated assembly indicated.

PART 3 EXECUTION

3.01 EXAMINATION

A. Examine substrates to which gypsum board shaft-wall assemblies attach or abut, with Installer present, including hollow-metal frames, elevator hoistway door frames, cast-in anchors, and structural framing. Examine for compliance with requirements for installation tolerances and other conditions affecting performance. Proceed with installation only after unsatisfactory conditions have been corrected.

3.02 INSTALLATION

A. General: Install gypsum board shaft-wall assemblies to comply with requirements of fire-resistance-rated assemblies indicated, manufacturer's written installation instructions, and the following:

1. ASTM C754 for installing steel framing.
2. Section 09250 - Gypsum Board Assemblies, for applying and finishing panels.

B. Do not bridge building expansion joints with shaft-wall assemblies; frame both sides of joints with furring and other support.

C. Install supplementary framing in gypsum board shaft-wall assemblies around openings and as required for blocking, bracing, and support of gravity and pullout loads of fixtures, equipment, services, heavy trim, furnishings, and similar items that cannot be supported directly by shaft-wall assembly framing.

D. At penetrations in shaft wall, maintain fire-resistance rating of shaft-wall assembly by installing supplementary steel framing around perimeter of penetration and fire protection behind boxes containing wiring devices, and similar items.

E. Isolate gypsum finish panels from building structure to prevent cracking of finish panels while maintaining continuity of fire-rated construction.

F. Install control joints to maintain fire-resistance rating of assemblies.

G. Seal gypsum board shaft walls with acoustical sealant at perimeter of each assembly where it abuts other work and at joints and penetrations within each assembly. Install acoustical sealant to withstand dislocation by air-pressure differential between shaft and external spaces; maintain an airtight and smoke-tight seal; and comply with manufacturer's written instructions or ASTM C919, whichever is more stringent.

END OF SECTION

Reviewed for Code Compliance
Inspections Division
Approved with Conditions
Date: 10/31/17

SECTION 09300

TILING

SEE INTERIOR DESIGN DRAWINGS FOR TILE MATERIAL SPECIFICATIONS

PART 1 - GENERAL

1.1 RELATED DOCUMENTS

A. Drawings and general provisions of the Contract, including General and Supplementary Conditions and Division 01 Specification Sections, apply to this Section.

1.2 SUMMARY

A. Section Includes:

1. Ceramic floor and wall tile.
2. Quarry Tile
3. Stone thresholds.
4. Waterproof membrane.
5. Crack isolation membrane.
6. Acoustical underlayment.
7. Tile backing panels.

1.3 DEFINITIONS

A. General: Definitions in the ANSI A108 series of tile installation standards and in ANSI A137.1 apply to Work of this Section unless otherwise specified.

B. ANSI A108 Series: ANSI A108.01, ANSI A108.02, ANSI A108.1A, ANSI A108.1B, ANSI A108.1C, ANSI A108.4, ANSI A108.5, ANSI A108.6, ANSI A108.8, ANSI A108.9, ANSI A108.10, ANSI A108.11, ANSI A108.12, ANSI A108.13, ANSI A108.14, ANSI A108.15, ANSI A108.16, and ANSI A108.17, which are contained in "American National Standard Specifications for Installation of Ceramic Tile."

C. Module Size: Actual tile size plus joint width indicated.

D. Face Size: Actual tile size, excluding spacer lugs.

1.4 SUBMITTALS

A. Product Data: For each type of product indicated.

B. Shop Drawings: Show locations of each type of tile and tile pattern. Where custom patterns are indicated, provide Shop Drawings showing location and extent of each custom pattern. Show widths, details, and locations of expansion, contraction, control, and isolation joints in tile substrates and finished tile surfaces.

1. Architect will provide final Drawing for custom pattern design of all tile (Tl-01).

Reviewed for Code Compliance
Inspections Division
Approved with Conditions
Date: 10/31/17

C. Samples for Verification:

1. Full-size units of each type and composition of tile and for each color and finisn required.

   a. For ceramic, concrete and marble mosaic tile in color blend patterns, provide full sheets of each color blend.

2. Assembled samples mounted on a rigid panel, with grouted joints, for each type and composition of tile and for each color and finish required. Make samples at least 12 inches square, but not fewer than 4 tiles. Use grout of type and in color or colors approved for completed Work.
3. Full-size units of each type of trim and accessory for each color and finish required.
4. Stone thresholds in 6-inch lengths.
5. Metal edge strips in 6-inch lengths.

D. Qualification Data: For qualified Installer.

E. Master Grade Certificates: For each shipment, type, and composition of tile, signed by tile manufacturer and Installer.

F. Product Certificates: For each type of product, signed by product manufacturer.

G. Material Test Reports: For each tile-setting and -grouting product.

1.5 QUALITY ASSURANCE

A. Source Limitations for Tile: Obtain tile of each type and color or finish from one source or producer.

1. Obtain tile of each type and color or finish from same production run and of consistent quality in appearance and physical properties for each contiguous area.

B. Source Limitations for Setting and Grouting Materials: Obtain ingredients of a uniform quality for each mortar, adhesive, and grout component from one manufacturer and each aggregate from one source or producer.

C. Source Limitations for Other Products: Obtain each of the following products specified in this Section from a single manufacturer for each product:

D. Mockups: Build mockups to verify selections made under sample submittals and to demonstrate aesthetic effects and set quality standards for materials and execution.

1. Build mockup of each type of floor tile installation.
2. Build mockup of each type of wall tile installation.
3. Approved mockups may become part of the completed Work if undisturbed at time of Substantial Completion.

E. Preinstallation Conference: Conduct conference at Project site.

1. Review requirements in ANSI A108.01 for substrates and for preparation by other trades.

Reviewed for Code Compliance
Inspections Division
Approved with Conditions
Date: 10/31/17

1.6 DELIVERY, STORAGE, AND HANDLING

A. Deliver and store packaged materials in original containers with seals unbroken and labels intact until time of use. Comply with requirements in ANSI A137.1 for labeling tile packages.

B. Store tile and cementitious materials on elevated platforms, under cover, and in a dry location.

C. Store aggregates where grading and other required characteristics can be maintained and contamination can be avoided.

D. Store liquid materials in unopened containers and protected from freezing.

E. Handle tile that has temporary protective coating on exposed surfaces to prevent coated surfaces from contacting backs or edges of other units. If coating does contact bonding surfaces of tile, remove coating from bonding surfaces before setting tile.

1.7 PROJECT CONDITIONS

A. Environmental Limitations: Do not install tile until construction in spaces is complete and ambient temperature and humidity conditions are maintained at the levels indicated in referenced standards and manufacturer's written instructions.

1.8 EXTRA MATERIALS

A. Furnish extra materials that match and are from same production runs as products installed and that are packaged with protective covering for storage and identified with labels describing contents.

1. Tile and Trim Units: Furnish quantity of full-size units equal to 3 percent of amount installed for each type, composition, color, pattern, and size indicated.
2. Grout: Furnish quantity of grout equal to 3 percent of amount installed for each type, composition, and color indicated.

PART 2 - PRODUCTS

2.1 PERFORMANCE REQUIREMENTS

A. Static Coefficient of Friction: For tile installed on walkway surfaces, provide products with the following values as determined by testing identical products per ASTM C 1028.

1. Level Surfaces: Minimum 0.6.
2. Step Treads: Minimum 0.6.
3. Ramp Surfaces: Minimum 0.8.

2.2 PRODUCTS, GENERAL

A. ANSI Ceramic Tile Standard: Provide tile that complies with ANSI A137.1 for types, compositions, and other characteristics indicated.

1. Provide tile complying with Standard grade requirements unless otherwise indicated.

Reviewed for Code Compliance
Inspections Division
Approved with Conditions
Date: 10/31/17

B. ANSI Standards for Tile Installation Materials: Provide materials complying w ANSI A108.02, ANSI standards referenced in other Part 2 articles, ANSI standards referen by TCA installation methods specified in tile installation schedules, and other requirements specified.

C. Factory Blending: For tile exhibiting color variations within ranges, blend tile in factory and package so tile units taken from one package show same range in colors as those taken from other packages and match approved Samples.

D. Mounting: For factory-mounted tile, provide back- or edge-mounted tile assemblies as standard with manufacturer unless otherwise indicated.

1. Where tile is indicated for installation in wet areas, do not use back- or edge-mounted tile assemblies unless tile manufacturer specifies in writing that this type of mounting is suitable for installation indicated and has a record of successful in-service performance.

2.3 TILE PRODUCTS

A. REFER TO SCHEDULES FOR ALL MATERIALS AND PRODUCTS

2.4 THRESHOLDS

A. General: Fabricate to sizes and profiles indicated or required to provide transition between adjacent floor finishes.

1. Bevel edges at 1:2 slope, with lower edge of bevel aligned with or up to 1/16 inch above adjacent floor surface. Finish bevel to match top surface of threshold. Limit height of threshold to 1/2 inch or less above adjacent floor surface.

B. Marble Thresholds: ASTM C 503, with a minimum abrasion resistance of 10 per ASTM C 1353 or ASTM C 241 and with honed finish.

1. REFER TO SCHEDULES FOR ALL MATERIALS AND PRODUCTS.

2.5 TILE BACKING PANELS

A. Reference Division 09 Section “Gypsum Board.”

2.6 CRACK ISOLATION AND WATERPROOFING MEMBRANE

A. General: Manufacturer's standard product, selected from the following, that complies with ANSI A118.12 for high performance and is recommended by the manufacturer for the application indicated. Include reinforcement and accessories recommended by manufacturer.

B. Fabric-Reinforced, Fluid-Applied Membrane: System consisting of liquid-latex rubber or elastomeric polymer and fabric reinforcement.

1. Products: Subject to compliance with requirements, Provide Laticrete 9235 Waterproof Membrane by Laticrete International, Inc., or an equal approved by the Architect.

2.7 SETTING MATERIALS

Reviewed for Code Compliance
Inspections Division
Approved with Conditions
Date: 10/31/17

A. Dry-Set Portland Cement Mortar (Thin Set): ANSI A118.1.

1. For wall applications, provide mortar that complies with requirements for nonsagging mortar in addition to the other requirements in ANSI A118.1.

B. Latex-Portland Cement Mortar: Latex-modified portland cement mortar complying with ANSI A118.4.

1. Product: Subject to compliance with requirements, provide "4237 Latex Thin-Set Mortar Additive/211 Crete Filler Powder" as manufactured by Laticrete International, Inc., or approved equal.

a. Combine at job site with prepackaged dry mortar mix supplied or specified by latex additive manufacturer.

2.8 GROUT MATERIALS

A. Polymer-Modified Tile Grout: ANSI A118.7.

1. Product: Subject to compliance with requirements, provide scheduled color and material.

B. Epoxy Grout: ANSI A118.3, provide epoxy grout at terra cotta tile installations, unless otherwise indicated.

C. Water-Cleanable Epoxy Grout: ANSI A118.3, with a VOC content of 65 g/L or less when calculated according to 40 CFR 59, Subpart D.

1. Product: Subject to compliance with requirements, and finish schedules.

2.9 ELASTOMERIC SEALANTS

A. General: Provide sealants, primers, backer rods, and other sealant accessories that comply with the following requirements and with the applicable requirements in Division 07 Section "Joint Sealants."

1. Sealants shall have a VOC content of 250 g/L or less when calculated according to 40 CFR 59, Subpart D (EPA Method 24).

B. Colors: Provide colors of exposed sealants to match colors of grout in tile adjoining sealed joints unless otherwise indicated.

C. One-Part, Mildew-Resistant Silicone Sealant (Guestroom Bathrooms): ASTM C 920; Type S; Grade NS; Class 25; Uses NT, G, A, and, as applicable to nonporous joint substrates indicated, O; formulated with fungicide, intended for sealing interior ceramic tile joints and other nonporous substrates that are subject to in-service exposures of high humidity and extreme temperatures.

1. Products: Subject to compliance with requirements, provide one of the following:

a. Dow Corning Corporation; Dow Corning 786.
b. GE Silicones; a division of GE Specialty Materials; Sanitary 1700.

Reviewed for Code Compliance
Inspections Division
Approved with Conditions
Date: 10/31/17

c. Pecora Corporation; Pecora 898 Sanitary Silicone Sealant.

1) Color: Clear, unless otherwise indicated.

2.10 MISCELLANEOUS MATERIALS

A. Trowelable Underlayments and Patching Compounds: Latex-modified, portland cement-based formulation provided or approved by manufacturer of tile-setting materials for installations indicated.

B. Metal Edge Strips: Subject to compliance with requirements, provide anodized aluminum metal edge strips as manufactured by Blanke or Milgo Bufkin, in dimensions and finishes selected by the Architect.

C. Temporary Protective Coating: Either product indicated below that is formulated to protect exposed surfaces of tile against adherence of mortar and grout; compatible with tile, mortar, and grout products; and easily removable after grouting is completed without damaging grout or tile.

1. Petroleum paraffin wax, fully refined and odorless, containing at least 0.5 percent oil with a melting point of 120 to 140 deg F per ASTM D 87.
2. Grout release in form of manufacturer's standard proprietary liquid coating that is specially formulated and recommended for use as temporary protective coating for tile.

D. Tile Cleaner: A neutral cleaner capable of removing soil and residue without harming tile and grout surfaces, specifically approved for materials and installations indicated by tile and grout manufacturers.

E. Grout Sealer: Manufacturer's standard silicone product for sealing grout joints and that does not change color or appearance of grout.

1. Products: Subject to compliance with requirements, provide one of the following:

a. Bonsal American; an Oldcastle company; Grout Sealer.
b. C-Cure; Penetrating Sealer 978.

2.11 MIXING MORTARS AND GROUT

A. Mix mortars and grouts to comply with referenced standards and mortar and grout manufacturers' written instructions.

B. Add materials, water, and additives in accurate proportions.

C. Obtain and use type of mixing equipment, mixer speeds, mixing containers, mixing time, and other procedures to produce mortars and grouts of uniform quality with optimum performance characteristics for installations indicated.

PART 3 - EXECUTION

3.1 EXAMINATION

A. Examine substrates, areas, and conditions where tile will be installed, with Installer present, for

Reviewed for Code Compliance
Inspections Division
Approved with Conditions
Date: 10/31/17

compliance with requirements for installation tolerances and other conditions affecting performance of installed tile.

1. Verify that substrates for setting tile are firm, dry, clean, free of coatings that are incompatible with tile-setting materials including curing compounds and other substances that contain soap, wax, oil, or silicone; and comply with flatness tolerances required by ANSI A108.01 for installations indicated.
2. Verify that concrete substrates for tile floors installed with adhesives bonded mortar bed or thin-set mortar comply with surface finish requirements in ANSI A108.01 for installations indicated.

    a. Verify that surfaces that received a steel trowel finish have been mechanically scarified.
    b. Verify that protrusions, bumps, and ridges have been removed by sanding or grinding.

3. Verify that installation of grounds, anchors, recessed frames, electrical and mechanical units of work, and similar items located in or behind tile has been completed.
4. Verify that joints and cracks in tile substrates are coordinated with tile joint locations; if not coordinated, adjust joint locations in consultation with Architect.

B. Proceed with installation only after unsatisfactory conditions have been corrected.

3.2 PREPARATION

A. Fill cracks, holes, and depressions in concrete substrates for tile floors installed with adhesives or thin-set mortar with trowelable leveling and patching compound specifically recommended by tile-setting material manufacturer.

B. Where indicated, prepare substrates to receive waterproofing by applying a reinforced mortar bed that complies with ANSI A108.1A and is sloped 1/4 inch per foot toward drains.

C. Blending: For tile exhibiting color variations, verify that tile has been factory blended and packaged so tile units taken from one package show same range of colors as those taken from other packages and match approved Samples. If not factory blended, either return to manufacturer or blend tiles at Project site before installing.

3.3 ACOUSTICAL UNDERLAYMENT INSTALLATION

A. Acoustical Underlayment Installation: Install acoustical underlayment according to the underlayment manufacturer’s written instructions, using manufacturer’s recommended adhesive.

3.4 TILE INSTALLATION

A. Comply with TCA's "Handbook for Ceramic Tile Installation" for TCA installation methods specified in tile installation schedules. Comply with parts of the ANSI A108 Series "Specifications for Installation of Ceramic Tile" that are referenced in TCA installation methods, specified in tile installation schedules, and apply to types of setting and grouting materials used.

1. For the following installations, follow procedures in the ANSI A108 Series of tile

Reviewed for Code Compliance
Inspections Division
Approved with Conditions
Date: 10/31/17

installation standards for providing 95 percent mortar coverage:

a. Tile floors in wet areas.
b. Tile floors composed of tiles 8 by 8 inches or larger.
c. Tile floors composed of rib-backed tiles.

B. Extend tile work into recesses and under or behind equipment and fixtures to form complete covering without interruptions unless otherwise indicated. Terminate work neatly at obstructions, edges, and corners without disrupting pattern or joint alignments.

C. Accurately form intersections and returns. Perform cutting and drilling of tile without marring visible surfaces. Carefully grind cut edges of tile abutting trim, finish, or built-in items for straight aligned joints. Fit tile closely to electrical outlets, piping, fixtures, and other penetrations so plates, collars, or covers overlap tile.

D. Jointing Pattern: Lay tile in patterns indicated on the Finish Schedule, or if not indicated on the Finish Schedule, as directed by the Architect. Lay out tile work and center tile fields in both directions in each space or on each wall area. Lay out tile work to minimize the use of pieces that are less than half of a tile. Provide uniform joint widths unless otherwise indicated.

1. For tile mounted in sheets, make joints between tile sheets same width as joints within tile sheets so joints between sheets are not apparent in finished work.
2. Where adjoining tiles on floor, base, walls, or trim are specified or indicated to be same size, align joints.
3. Where tiles are specified or indicated to be whole integer multiples of adjoining tiles on floor, base, walls, or trim, align joints unless otherwise indicated.

E. Lay out tile wainscots to dimensions indicated or to next full tile beyond dimensions indicated.

F. Expansion Joints: Provide expansion joints and other sealant-filled joints, including control, contraction, and isolation joints, where indicated. Form joints during installation of setting materials, mortar beds, and tile. Do not saw-cut joints after installing tiles.

1. Where joints occur in concrete substrates, locate joints in tile surfaces directly above them.
2. Prepare joints and apply sealants to comply with requirements in Division 07 Section "Joint Sealants."

G. Stone Thresholds: Install stone thresholds in same type of setting bed as adjacent floor unless otherwise indicated.

1. Do not extend waterproofing or crack isolation membrane under thresholds set in latex-portland cement mortar. Fill joints between such thresholds and adjoining tile set on waterproofing or crack isolation membrane with elastomeric sealant.

H. Metal Edge Strips: Install at locations indicated.

I. Grout Sealer: Apply grout sealer to cementitious grout joints in tile floors according to grout-sealer manufacturer's written instructions. As soon as grout sealer has penetrated grout joints, remove excess sealer and sealer from tile faces by wiping with soft cloth.

Reviewed for Code Compliance
Inspections Division
Approved with Conditions
Date: 10/31/17

3.5 TILE BACKING PANEL INSTALLATION

A. Install tile backing panels and treat joints according to ANSI A108.11 and manufacturer's written instructions for type of application indicated. Use latex-portland cement mortar for bonding material unless otherwise directed in manufacturer's written instructions.

3.6 WATERPROOFING/CRACK ISOLATION MEMBRANE INSTALLATION

A. Install waterproofing to comply with ANSI A108.13 and manufacturer's written instructions to produce waterproof membrane of uniform thickness and bonded securely to substrate.

B. Do not install tile or setting materials over waterproofing until waterproofing has cured and been tested to determine that it is watertight.

3.7 CLEANING AND PROTECTING

A. Cleaning: On completion of placement and grouting, clean all ceramic tile surfaces so they are free of foreign matter.

1. Remove epoxy and latex-portland cement grout residue from tile as soon as possible.
2. Clean grout smears and haze from tile according to tile and grout manufacturer's written instructions but no sooner than 10 days after installation. Use only cleaners recommended by tile and grout manufacturers and only after determining that cleaners are safe to use by testing on samples of tile and other surfaces to be cleaned. Protect metal surfaces and plumbing fixtures from effects of cleaning. Flush surfaces with clean water before and after cleaning.
3. Remove temporary protective coating by method recommended by coating manufacturer and that is acceptable to tile and grout manufacturer. Trap and remove coating to prevent drain clogging.

B. Protect installed tile work with kraft paper or other heavy covering during construction period to prevent staining, damage, and wear. If recommended by tile manufacturer, apply coat of neutral protective cleaner to completed tile walls and floors.

C. Prohibit foot and wheel traffic from tiled floors for at least seven days after grouting is completed.

D. Before final inspection, remove protective coverings and rinse neutral protective cleaner from tile surfaces.

3.8 INTERIOR TILE INSTALLATION SCHEDULE

A. General: Provide interior tile as indicated on the Drawings and Finish Schedule.

END OF SECTION 09300

Reviewed for Code Compliance
Inspections Division
Approved with Conditions
Date: 10/31/17

SECTION 09512

ACOUSTICAL TILE CEILINGS

SEE INTERIOR DESIGN DRAWINGS FOR MATERIAL SPECIFICATIONS

PART 1 GENERAL

1.01 SUMMARY

A. Section Includes:

1. Suspended Metal Grid Systems Complete With Wall Trim

1.02 SUBMITTALS

A. Submit "Letter of Conformance" in accordance with Section 01 33 00 (01330) and the following supporting data:

1. Submit manufacturer's product and maintenance data for each type of ceiling system and accessory

1.03 QUALITY ASSURANCE

A. Qualifications of Installers:

1. The suspended ceiling Subcontractor shall have a record of successful installations of similar ceilings acceptable to the Architect.

2. For the actual fabrication and installation of all components of the system, use only personnel who are thoroughly trained and experienced in the skills required and completely familiar with the requirements established for this work.

B. In addition to complying with all pertinent codes and regulations, suspension system shall be installed according to ASTM C636, Installation of Metal Ceiling Suspension System for Acoustical Tile and Lay-in Panels.

1.04 DELIVERY, STORAGE, AND HANDLING

A. Use all means necessary to protect the materials of this Section before, during, and after installation and to protect work and materials of all other trades.

1.05 PROJECT CONDITIONS

A. Do not install acoustical ceilings until building is enclosed, sufficient heat is provided, dust-generating activities have terminated, and overhead work is completed, tested, and approved.

1.06 REPLACEMENT STOCK

A. Refer to Section 01790.

PART 2 PRODUCTS

Reviewed for Code Compliance
Inspections Division
Approved with Conditions
Date: 10/31/17

2.01 STRUCTURAL EXPOSED SUSPENSION SYSTEM

A. Approved Manufacturers:

1. System used shall be as shown in Interior Finish Index or approved substitution by:

a. Chicago Metallic Corp. (800-323-7164)

b. USG Interiors, Inc. (800-874-4968)

B. Type I Grid: "DX-24 Grid System" by USG Interiors; "Prelude XL 9/16" Exposed Tee System" by Armstrong; or "200 Snap-Grid System" by Chicago Metallic

1. System used shall be double web, direct hung exposed system.

a. General: The systems shall be such that the ceiling panels may be removed without damage; that the main runner and cross runners may be removed and replaced without deforming the runners or disturbing the balance of the grid system.

2. Main Runners

a. Acceptable Products:

1) Suprafine XL Exposed Tee Grid System 9/16"

2) DONN Centricitee, 9/16" face, steel; USG Interiors

3) 4000 Tempra 9/16" face, steel; Chicago Metallic

b. The main runner shall have a non-directional bayonet coupling.

3. Cross Runners: Designed to support lay-in lighting fixtures and to receive acoustical tile at sides of fixture opening.

a. Acceptable Products:

1) "ML7520 Cross Tee"; Armstrong

2) "DX-T222 Cross Tee"; USG Interiors

3) "Number 402201.CH Cross Tee"; Chicago Metallic

4. Perimeter Wall Angles: Hemmed edge, 7/8" x 7/8".

5. Accessories: Provide all accessories needed for proper installation of system.

6. Finish: All exposed surfaces shall be finished white.

2.02 ACOUSTICAL MATERIALS

A. Product: By Interior Designer

Reviewed for Code Compliance
Inspections Division
Approved with Conditions
Date: 10/31/17

2.03 LIGHTING: Contractor shall be responsible for providing sufficient support on grid systems support light fixtures. All fixtures shall be supported at each and every corner.

PART 3 EXECUTION

3.01 SURFACE CONDITIONS

A. Inspection: Prior to all work of this Section, carefully inspect the installed work of all other trades and verify that all such work is complete to the point where this installation may properly commence. Verify that suspended ceiling systems may be installed in strict accordance with all pertinent codes and regulations, and the manufacturer's recommendations.

B. Discrepancies: In the event of discrepancy, immediately notify the Architect. Do not proceed in areas of discrepancy until all such discrepancies have been fully resolved.

3.02 INSTALLATION

A. General:

1. Install acoustical panel, suspension system and accessories in compliance with manufacturers instructions and requirements of ASTM C636.

2. Install ceiling system in a true and even plane with straight line courses laid out symmetrically about center lines of area or as indicated. Border tile shall be minimum 6" wide and neatly fit against vertical surfaces to form a tight fit.

3. Provide metal edge angle at perimeter of units as detailed on Drawings. Cut and fit around light fixtures, diffusers, etc.

B. Lay-In Ceiling System:

1. Hanging main tees parallel in a flat plane by means of #10 gauge wire hangers attached to construction above. Hangers shall be spaced not over 4'-0" along the main tees and within 6" of the ends and splices of main tees, and other interruptions. Main tees shall be spaced 2'- 0" o.c. Cross tees shall be interlocked to main tees and spaced as required to support tile edges.

2. Attachment to ducts, pipes, etc. will not be permitted. Bridge under obstructions with a grid of 1-1/2" cold rolled channels or other suitable members to support ceiling grid.

3. Install wall angle at perimeter of walls, partitions, columns, pipes, and other obstructions that extend above the ceiling. Securely attach with appropriate fastening devices at maximum 16" o.c. Form reveal of same depth and width as that formed between edge of panel and flange at exposed suspension grid. Neatly cut and fit around light fixtures, diffusers, etc. Provide wall angles fabricated to diameter required to fit penetrations.

4. Insert ceiling panels, installing hold down clips on panels extending over partitions and where required to maintain fire ratings.

5. At all locations where ceiling tiles are cut, the cut edges of the tiles shall match the premanufactured edges (i.e. cut edges are to be beveled to match beveled edged tiles). Exposed cut edges are to be painted to match face of tile with paint as approved by tile manufacturer.

Reviewed for Code Compliance
Inspections Division
Approved with Conditions
Date: 10/31/17

3.03 CLEANING UP: Completely remove all finger prints and traces of soil and damage from surfaces of grid and acoustical materials, using only those cleaning materials recommended that purpose by the manufacturer of the material being cleaned. Replace units which are damaged or improperly installed.

END OF SECTION

Reviewed for Code Compliance
Inspections Division
Approved with Conditions
Date: 10/31/17

SECTION 09900

PAINTING

PART 1 GENERAL

1.01 SUMMARY

A. Section Includes:

1. This Section includes surface preparation and the application of paint materials to exposed interior and exterior items and surfaces scheduled. Surface preparation, prime and finish coats specified are in addition to shop-priming and surface treatments.

2. Paint all exposed surfaces, whether or not colors are designated, except where a surface or material is indicated not to be painted or is to remain natural. Where an item or surface is not mentioned, paint the same color as similar adjacent materials or surfaces. If color or finish is not designated, the Owner will select from standard colors or finishes available.

3. **Use Vapor Barrier Primer Sealer on the interior face of all exterior walls and at ceilings at the roof level. All exterior insulated walls and ceilings at the roof level shall receive Vapor Barrier Primer Sealer with low vapor permeability.**

4. Except in mechanical and electrical rooms, paint all exposed plumbing, heating, fire protection, and electrical material to match the walls and ceilings of that area unless noted otherwise. This shall include, but not be limited to, pipes, sprinkler piping, insulation, conduit, ducts, access panels, grilles, diffusers, hangers, exposed steel and iron supports, HVAC and electrical equipment that do not have a factory applied finish, whether the adjacent surfaces receive paint or not, and the like. Include dampers or baffles behind grilles.

5. Unless noted otherwise, painting is not required on pre-finished items, finished metal surfaces, concealed surfaces, operating parts, sprinkler heads, or labels.

   a. All louvers and grilles to be painted to match adjacent surfaces.

   b. Labels: Do not paint over Underwriter's Laboratories, FMG or other code-required labels, or equipment name, identification, performance rating, or nomenclature plates.

B. Related Sections:

1. Prime coat on new hollow metal work shall be furnished under the "Steel Doors and Frames" Section 08 11 13 (08110).

2. Prime coat on lintels shall be furnished under the Division 05 Sections.

3. Spray applied textured coating specified in Section 09 21 16 (09255).

4. Prime and finish coat for exposed exterior ferrous metal items and ferrous metal items located within Interior Pool areas shall be furnished under the "High Performance Coatings", Section 09 96 00 (09960). Refer to that Section for items included.

Reviewed for Code Compliance
Inspections Division
Approved with Conditions
Date: 10/31/17

1.02 DEFINITIONS:

A. "Paint" includes coating systems materials, primers, emulsions, enamels, stains, sealers a fillers, and other applied materials whether used as prime, intermediate or finish coats.

1.03 SUBMITTALS

A. Submit "Letter of Conformance" in accordance with Section 01 33 00 (01330) with the following supporting data:

1. Product Data: Submit manufacturer's technical information, label analysis, and application instructions for each paint material proposed for use.

2. Samples: Submit two representative samples of each major type of surface or material. Do not proceed with final painting until samples are approved.

3. Color Charts: In duplicate, for all paints, stains and special coatings. Identify with numbers used on the "Interior Finish Index" or on the Drawings.

4. Painting Schedule: In a form similar to the schedule herein outlining the type of paint to be used for each category, application, and color. Indicate each material and cross-reference specific coating, finish system, and application. Identify each material by manufacturer's catalog number and general classification.

5. Quality Control Submittals:

a. Certifications: Manufacturer's statement that paint materials conform to current regulations relating to lead content and air pollution emission requirements.

B. Written Permission in writing by the Owner's Representative for the use of Mechanical application methods.

1.04 QUALITY ASSURANCE

A. Single Source Responsibility: Provide primers and undercoat paint produced by the same manufacturer as the finish coats.

B. Coordination of Work: Review Sections in which primers are provided to ensure compatibility of the total systems for various substrates.

C. Material Quality: Provide the manufacturer's best quality trade sale type paint material of the various types specified. Paint material containers not displaying manufacturer's product identification will not be acceptable. Proprietary names used to designate colors or materials are not intended to imply that products named are required or to exclude of equal products of other manufacturers.

1.05 DELIVERY AND STORAGE

A. Deliver materials to the job site in manufacturer's original, unopened packages and containers bearing manufacturer's name and label with trade name and manufacturer's instructions.

B. Store materials not in use in tightly covered containers in a well-ventilated area at a minimum ambient temperature of 45 deg. F. Protect from freezing. Keep storage area neat and orderly. Remove oily rags and waste daily.

Reviewed for Code Compliance
Inspections Division
Approved with Conditions
Date: 10/31/17

1.06 PROJECT CONDITIONS:

A. Do not apply paint in snow, rain, fog, or mist, or when the relative humidity exceeds 85 percent, or at temperatures less than 5 degrees F. above the dew point, or to damp or wet surfaces.

1.07 MATERIALS:

A. Except where noted otherwise, all finishing materials, thinners, etc., shall be the best quality, first line materials as manufactured by:

B. Approved Manufacturers:

1. Pratt and Lambert, Inc. (Division of Sherwin Williams (P&L) (800-289-7728)
2. Benjamin Moore & Co. (BM) (888-236-6667)
3. Martin Senour (MN) (800-677-5270)
4. ICI Paints (800-984-5444)

C. Raw linseed oil, turpentine, benzene, gloss oil, or coal oil shall not be used in any of the materials for painting work.

D. Low Vapor Permeable primer sealer shall be SUPER SPEC LATEX VAPOR BARRIER PRIMER SEALER 260 by Benjamin Moore, or approved equal. Perm rating of .5 when tested under ASTM E 96.

PART 2 PRODUCTS

2.01 PAINT MATERIALS - GENERAL

A. Material Compatibility: Provide block fillers, primers, and finish-coat materials that are compatible with one another and with the substrates indicated under conditions of service and application, as demonstrated by manufacturer based on testing and field experience.

B. Material Quality: Provide manufacturer's best-quality paint material of the various coating types specified that are factory formulated and recommended by manufacturer for application indicated.

1. Paint-material containers not displaying manufacturer's product identification will **NOT** be acceptable.

2.02 PAINT SCHEDULE – SEE PAINT SCHEDULE BY INTERIOR DESIGNER

2.03 PROTECTIVE COATINGS

A. Bituminous Paint: Acid and alkali resistant type conforming to ASTM D1187.

B. Zinc Chromate Primer: Standard zinc chromate primer, selected from manufacturers listed in this Section.

C. Aluminum Pigmented Paint: Fibrated aluminum complying with ASTM D2824, Type IV.

D. Apply protective coating, bituminous paint, to isolate aluminum member as required.

Reviewed for Code Compliance
Inspections Division
Approved with Conditions
Date: 10/31/17

2.04 COLOR SAMPLES:

A. The Contractor shall furnish samples of all finishes in triplicate and obtain the approval color match before starting work. Final colors must match exactly with the approved sample. Colors selection and quantity of different colors, as specified by Interior Designer, and approved by Owner's Representative.

B. Where a different manufacturer is utilized that product identified in Interior Finish Index, color must match listed name or number.

PART 3 EXECUTION

3.01 EXAMINATION

A. Examine substrates and conditions under which painting will be performed for compliance with requirements. Do not begin application until unsatisfactory conditions have been corrected.

1. Start of painting will be construed as Applicator's acceptance of surfaces and conditions within a particular area.

3.02 SURFACES TO BE COATED

A. Paint access doors, panels, registers, diffusers, light fixture trim, metal speaker covers and grilles the same color as adjacent surfaces. Paint access doors and panels in open position.

B. Paint interiors of ducts showing through registers and grilles flat black.

C. Paint prime coated or previously painted hinges the same as door frame to which they are attached.

D. Finish edges of doors to match faces.

E. Do not paint electrical device face plates or devices, sprinkler heads, smoke alarms or thermostats/covers.

F. Unless otherwise directed, remove and spray paint metal items/products that are removable such as vents, registers, access panels, covers, louvers and diffusers. Reinstall upon completion.

G. **Paint all interior gypsum board faces on exterior insulated walls and ceilings as part of the roof assembly with Low Vapor Permeable primer sealer with a perm rating of .5 when tested under ASTM E 96.**

3.03 PREPARATION:

A. Remove hardware and hardware accessories, plates, machined surfaces, lighting fixtures, and items in place that are not to be painted, or provide protection prior to surface preparation and painting. Remove items if necessary for complete painting of the items and adjacent surfaces. Following completion of painting, reinstall items removed using workmen skilled in the trades involved.

B. Clean surfaces before applying paint or surface treatments. Schedule cleaning and painting so dust and other contaminants will not fall on wet, newly painted surfaces.

C. Provide protection for adjacent surfaces as necessary to prevent paint from coming into contact with adjacent materials not scheduled for painting.

Reviewed for Code Compliance
Inspections Division
Approved with Conditions
Date: 10/31/17

3.04 SURFACE PREPARATION:

A. Clean and prepare surfaces to be painted in accordance with manufacturer's instructions for each particular substrate condition. Notify Architect in writing of problems anticipated using specified finish coat material with substrates primed by others.

B. Ferrous Metals: Clean non-galvanized ferrous metal surfaces that have not been shop-coated; remove oil, grease, dirt, loose mill scale and other foreign substances. Use solvent or mechanical cleaning methods that comply with recommendations of the Steel Structures Painting Council.

1. Touch-up shop-applied prime coats that have been damaged, and bare areas. Wire-brush, clean with solvents, and touch-up with the same primer as the shop coat.

2. At areas to receive epoxy paint, prepare steel surfaces to SSPC-SPII power tool clean.

C. Galvanized Surfaces: Utilize SSPC-SP1 solvent cleaning and chemical wash (tri-sodium phosphate). Power wash with tri-sodium phosphate type cleaner (5% solution at 140 degrees F.) and solvent clean after rinsing and drying with a non-petroleum based solvent cleaner so that surface is free of oil and surface contaminants. Remove pretreatment from galvanized sheet metal fabricated from coil stock, by mechanical methods.

1. Touch-up shop-applied prime coats that have been damaged, and bare areas. Wire-brush clean with solvents, and touch-up with the same primer as the shop coat.

D. Wood Surfaces:

1. General:

a. Clean surfaces of dirt, oil, and other foreign substances with scrapers, mineral spirits, and sandpaper, as required. Sand surfaces exposed to view smooth and dust off.

b. Scrape and clean small, dry, seasoned knots, and apply a thin coat of white shellac or other recommended knot sealer before applying primer. After priming, fill holes and imperfections in finish surfaces with putty or plastic wood filler. Sand smooth when dried.

c. Delete subparagraphs below if these requirements are specified in other Sections.

d. Prime, stain, or seal wood to be painted immediately on delivery. Prime edges, ends, faces, undersides, and backsides of wood, including cabinets, counters, cases, and paneling.

e. When transparent finish is required, backprime with spar varnish.

f. Backprime paneling on interior partitions where masonry, plaster, or other wet wall construction occurs on backside.

g. Seal tops, bottoms, and cutouts of unprimed wood doors with a heavy coat of varnish or sealer immediately on delivery.

3.05 MATERIALS PREPARATION:

A. Mix and prepare paint in accordance with manufacturer's directions.

Reviewed for Code Compliance
Inspections Division
Approved with Conditions
Date: 10/31/17

B. Stir material before application to produce a mixture of uniform density; stir as requi during application. Do not stir surface film into material. Remove film and, if necessa strain before using.

C. Use only thinners approved by manufacturer, and only within recommended limits.

3.06 APPLICATION:

A. Apply paint in accordance with manufacturer's directions. Use applicators and techniques best suited for substrate and type of material being applied. Do not paint over dirt, rust, scale, grease, moisture, scuffed surfaces, or conditions detrimental to formation of a durable paint film.

B. Paint colors, surface treatments, and finishes are indicated in "schedules."

C. The number of coats and film thickness required is the same regardless of application method. Do not apply succeeding coats until previous coat has cured. Sand between applications where required to produce a smooth, even surface. Apply additional coats when undercoats or other conditions show through final coat, until paint film is of uniform finish, color, and appearance.

D. The term "exposed surfaces" includes areas visible when permanent or built-in items are in place. Extend coatings in these areas to maintain system integrity and provide desired protection.

E. Paint back sides of access panels and removable or hinged covers to match exposed surfaces.

F. Omit primer on metal surfaces that have been shop-primed, unless primer becomes worn, damaged, or more than six months old from date of delivery to job site.

G. Paint all edges of every door to match faces, including top and bottoms.

3.07 MINIMUM COATING THICKNESS:

A. Apply materials at the manufacturer's recommended spreading rate. Provide total dry film thickness of the system as recommended by the manufacturer.

3.08 BLOCK FILLERS:

A. Apply block fillers at a rate to ensure complete coverage with pores filled.

3.09 PRIME COATS:

A. Before application of finish coats, apply a prime coat as recommended by the manufacturer to material required to be painted or finished, and has not been prime coated by others.

B. **Apply to all interior gypsum board faces on exterior insulated walls and ceilings as part of the roof assembly Low Vapor Permeable primer sealer with a perm rating of .5 when tested under ASTM E 96.**

C. Tinting of primers will not be permitted.

D. Re-coat primed and sealed substrates where there is evidence of suction spots or unsealed areas in the first coat to assure a finish coat with no burn-through or other defects due to insufficient sealing.

E. Back Priming:

1. All wood trim shall be back primed before installation. Spot prime all ends of trim.

Reviewed for Code Compliance
Inspections Division
Approved with Conditions
Date: 10/31/17

3.10 BRUSH APPLICATION:

A. Brush-out and work brush coats into surfaces in an even film. Eliminate cloudiness, spotting, holidays, laps, brush marks, runs, sags, ropiness, or other surface imperfections. Draw neat glass lines and color breaks. Apply primers and first coats by brush unless manufacturer's instructions permit use of mechanical applicators.

3.11 ROLLER APPLICATION

A. Rollers: Use rollers of carpet, velvet-back, or high-pile sheep's wool as recommended by manufacturer for material and texture required.

3.12 MECHANICAL APPLICATIONS:

A. Mechanical methods for paint application will ONLY be permitted by written permission of the Architect. All suite entry doors must be brush applied.

3.13 COMPLETED WORK:

A. Match approved samples for color, texture and coverage. Remove, refinish or repaint work not in compliance with specified requirements.

3.14 CLEANING

A. At the end of each work day, remove empty cans, rags, rubbish, and other discarded paint materials from the site.

B. Upon completion of painting, clean glass and paint-spattered surfaces. Remove spattered paint by washing, scraping, or other proper methods, using care not to scratch or damage adjacent finished surfaces.

C. Protect work of other trades, whether to be painted or not, against damage from painting. Correct damage by cleaning, repairing or replacing, and repainting, as acceptable to Architect.

D. Provide "Wet Paint" signs to protect newly-painted finishes. Remove temporary protective wrappings provided by others for protection of their work after completion of painting operations. At completion of construction activities of other trades, touch-up and restore damaged or defaced painted surfaces.

END OF SECTION

Benjamin Moore®

SUPER SPEC®
LATEX VAPOR BARRIER PRIMER SEALER 260

Reviewed for Code Compliance
Inspections Division
Approved with Conditions
Date: 10/31/17

Features

- Ideal for wallboard and plaster surfaces
- Forms a moisture vapor barrier and reduces heat loss
- Easy to apply; fast dry for quicker recoat
- Good adhesion
- Perm rating of .5 when tested under ASTM E 96
- Hides well with excellent hold out

General Description

A specially designed interior latex primer sealer that provides a film with low vapor permeability. This fast-drying, non breathing primer-sealer acts as a moisture vapor barrier when applied on interior walls and ceilings.

Recommended For

- For commercial and residential applications
- For new or previously painted drywall construction, plaster, composition board, non-bleeding woods, and concrete

Limitations

- Do not apply when air and surface temperatures are below 50°F (10°C)
- Do not apply to plaster surfaces that are not fully cured. Full cure typically requires 30 days. Plaster will not cure properly if sealed before full cure.

Product Information

Colors — Standard:

260 00 White
(May be tinted with up to 2.0 fl. oz. of Benjamin Moore® Color Preview® colorants per gallon.)

— Tint Bases:

Not available

— Special Colors:

Contact your Benjamin Moore representative.

Certification:

VOC compliant in all regulated areas

ASTM E 96; Water Vapor Permeance -.5 perms.

Class A (0-25) over non-combustible surfaces when tested in accordance with ASTM E-84

Qualifies for LEED® Credit (PRIMER)

Technical Assistance:

Available through your local authorized independent Benjamin Moore® retailer. For the location of the retailer nearest you, call 1-800-826-2623, see www.benjaminmoore.com, or consult your local Yellow pages.

Technical Data◊		White
Vehicle Type		Styrene Butadiene Acrylic
Pigment Type		Titanium Dioxide
Volume Solids		27%
Coverage per Gallon at Recommended Film Thickness		450 Sq. Ft.
Recommended Film Thickness	– Wet	3.6 mils
	– Dry	1.0 mils
Depending on surface texture and porosity. Be sure to estimate the right amount of paint for the job. This will ensure color uniformity and minimize the disposal of excess paint.		
Dry Time @ 77°F (25°C) @ 50% RH	– To Touch	1 Hour
	– To Recoat	2 Hours
Painted surfaces can be washed after two weeks. High humidity and cool temperatures will result in longer dry, recoat and service times.		
Dries By		Evaporation, Coalescence
Viscosity		88 ± 2 KU
Flash Point		None
Gloss / Sheen		Flat
Surface Temperature at Application	– Min.	50°F
	– Max.	90°F
Thin With		Clean Water
Clean Up Thinner		Clean Water
Weight Per Gallon		10.5 lbs
Storage Temperature	– Min.	40°F
	– Max.	90°F

Volatile Organic Compounds (VOC)

99 Grams/Liter .82 lbs./Gallon

Reviewed for Code Compliance
Inspections Division
Approved with Conditions
Date: 10/31/17

Surface Preparation

Surfaces to be primed must be clean, dry, and free of wax, grease, dust, dirt, and mildew. Previously coated surfaces should be sound and tight adhering. All plaster surfaces must be thoroughly cured. Patch all holes and cracks with spackling compound. Apply Super Spec® Latex Vapor Barrier Primer Sealer (260) before and after filling nail holes, cracks, and other surface imperfections. Glossy areas should be dulled. Remove all peeling and scaling paint by scraping or use of power equipment.

Poured and pre-cast concrete must be allowed to cure for 30 days; block construction should be allowed to cure for 30 days. All surfaces must be thoroughly brushed with stiff fiber bristles to remove loose particles.

Difficult Substrates: Benjamin Moore® offers a number of specialty primers for use over difficult substrates such as bleeding woods, grease, crayon markings, hard glossy surfaces, galvanized metal, or other substrates where paint adhesion or stain suppression is a particular problem. Your Benjamin Moore® retailer can recommend the right problem-solving primer for your special needs.

WARNING! If you scrape, sand or remove old paint, you may release lead dust. **LEAD IS TOXIC. EXPOSURE TO LEAD DUST CAN CAUSE SERIOUS ILLNESS, SUCH AS BRAIN DAMAGE, ESPECIALLY IN CHILDREN. PREGNANT WOMEN SHOULD ALSO AVOID EXPOSURE.** Wear a NIOSH-approved respirator to control lead exposure. Carefully clean up with a HEPA vacuum and a wet mop. Before you start, find out how to protect yourself and your family by contacting the National Lead Information Hotline at 1-800-424-LEAD or log on to www.epa.gov/lead.

Primer/Finish Systems

For best hiding results, tint Super Spec® Latex Vapor Barrier Primer Sealer (260) to the approximate shade of the finish coat, especially when a significant color change is desired. **Special Note:** Certain custom colors require a Deep Color Base Primer tinted to a special prescription formula to achieve the desired color. Consult your retailer.

Wood and engineered wood products:
Primer: Super Spec® Latex Vapor Barrier Primer Sealer (260)
Finish: Appropriate Benjamin Moore® interior finish paint

Plaster/Drywall:
Primer: Super Spec® Latex Vapor Barrier Primer Sealer (260)
Finish: Appropriate Benjamin Moore® interior finish paint

Rough or Pitted Masonry:
Fill: Super Spec® Latex Block Filler (160) or Super Spec® Masonry Interior/Exterior Hi-Build Block Filler (206)
Primer: Super Spec® Latex Vapor Barrier Primer Sealer (260)
Finish: Appropriate Benjamin Moore® interior finish paint

Smooth Poured or Precast Concrete:
Primer: Super Spec® Latex Vapor Barrier Primer Sealer (260)
Finish: Appropriate Benjamin Moore® interior finish paint

Repaint, All Substrates: Prime bare areas with the primer recommended for the substrate above.

Application

Stir thoroughly before use. Apply one or two coats. For b results, use a Benjamin Moore® Professional custom-blen nylon/polyester brush, Benjamin Moore® Professional roller, or a similar product. This product can also be sprayed.

Spray, Airless: Fluid Pressure— 1,500 to 3,000 PSI;
Tip — .013–.017 Orifice

Thinning/Cleanup

Thinning is unnecessary, but if required to obtain desired application properties, a small amount of clean water may be added. Never add other paints or solvents.

Clean brushes, rollers and other painting tools in warm soapy water immediately after use. Spray equipment should be given a final rinse with mineral spirits to prevent rusting or follow state/local guidelines on solvent use.

USE COMPLETELY OR DISPOSE OF PROPERLY. Dry, empty containers may be recycled in a can recycling program. **Local disposal requirements vary; consult your sanitation department or state-designated environmental agency on disposal options.**

Environmental, Health & Safety Information

Use only with adequate ventilation. Do not breathe spray mist or sanding dust. Ensure fresh air entry during application and drying. Avoid contact with eyes and prolonged or repeated contact with skin. Wear an appropriate, properly fitted respirator (NIOSH approved) during application, sanding, and clean-up. Follow respirator manufacturer's directions for respirator use. Close container after each use. Wash thoroughly after handling.

WARNING: This product contains a chemical known to the state of California to cause cancer and birth defects, or other reproductive harm.

FIRST AID: In case of eye contact, flush immediately with plenty of water for at least 15 minutes; for skin, wash thoroughly with soap and water. If symptoms persist, seek medical attention. If you experience difficulty breathing, leave the area to obtain fresh air. If continued difficulty is experienced, get medical attention immediately.

IN CASE OF SPILL – Absorb with inert material and dispose of as specified under "Cleanup".

KEEP OUT OF REACH OF CHILDREN
PROTECT FROM FREEZING

Refer to Material Safety Data Sheet for additional health and safety information.

Benjamin Moore & Co., 101 Paragon Drive, Montvale, NJ 07645 Tel: (201) 573-9600 Fax: (201) 573-9046 www.benjaminmoore.com M72 260 US 042314

Benjamin Moore, Color Preview, Super Spec and the triangle "M" symbol are registered trademarks, licensed to Benjamin Moore & Co.
All other trademarks belong to their respective owners.
© 2002, 2012 Benjamin Moore & Co. All rights reserved

Reviewed for Code Compliance
Inspections Division
Approved with Conditions
Date: 10/31/17

SECTION 09910

INTERIOR PAINTING

PART 1 - GENERAL

1.1 RELATED DOCUMENTS

A. Drawings and general provisions of the Contract, including General and Supplementary Conditions and Division 01 Specification Sections, apply to this Section.

1.2 SUMMARY

A. Section Includes:

1. Exposed interior items and surfaces.
2. Prime coat only on all wall surfaces scheduled to receive vinyl wall covering, mirror, back painted glass or tack wall.
3. Surface preparation, priming, and finish coats specified in this Section are in addition to shop priming and surface treatment specified in other Sections.

B. Paint exposed surfaces, except where the paint schedules indicate that a surface or material is not to be painted or is to remain natural. If the paint schedules do not specifically mention an item or a surface, paint the item or surface the same as similar adjacent materials or surfaces whether or not schedules indicate colors. If the schedules do not indicate color or finish, the Architect will select from standard colors and finishes available.

1. Painting includes field painting of exposed bare and covered pipes and ducts (including color coding), hangers, exposed steel and iron work, and primed metal surfaces of mechanical and electrical equipment.
2. Painting include behind louver openings, blank off panels, exposed framing within open joints, open reveals, open light through, light coves and etc.
3. Include reveals, trims, and control joints.
4. Painting of steel unitized curtain wall supports and framing that is visible through daylight openings.

C. Do not paint prefinished items, concealed surfaces, finished metal surfaces, operating parts, and labels.

1. Prefinished items include the following factory-finished components:

a. Architectural woodwork and casework.
b. Metal and glass partitions.
c. Metal lockers.
d. Doors and frames of elevator cabs.
e. Finished mechanical and electrical equipment.
f. Light fixtures.
g. Distribution cabinets.
h. Pipe railing as specified.

2. Concealed surfaces include walls or ceilings in the following generally inaccessible spaces:

Reviewed for Code Compliance
Inspections Division
Approved with Conditions
Date: 10/31/17

a. Furred areas.
b. Ceiling plenums.
c. Pipe spaces.
d. Duct shafts.

3. Finished metal surfaces include the following:

a. Anodized aluminum.
b. Stainless steel.
c. Chromium plate.

4. Operating parts include moving parts of operating equipment and the following:

a. Valve and damper operators.
b. Linkages.
c. Sensing devices.
d. Motor and fan shafts.

5. Labels: Do not paint over Underwriters Laboratories (UL), Factory Mutual (FM), or other code-required labels or equipment name, identification, performance rating, or nomenclature plates.

1.3 DEFINITIONS

A. General: Standard coating terms defined in ASTM D 16 apply to this Section.

1. Flat refers to a lusterless or matte finish with a gloss range below 15 when measured at an 85-degree meter.
2. Eggshell refers to low-sheen finish with a gloss range between 5 and 20 when measured at a 60-degree meter.
3. Satin refers to low-sheen finish with a gloss range between 15 and 35 when measured at a 60-degree meter.
4. Semigloss refers to medium-sheen finish with a gloss range between 30 and 65 when measured at a 60-degree meter.

1.4 SUBMITTALS

A. Product Data: For each paint system specified. Include block fillers and primers.

1. Material List: Provide an inclusive list of required coating materials. Indicate each material and cross-reference specific coating, finish system, and application. Identify each material by manufacturer's catalog number and general classification.
2. Manufacturer's Information: Provide manufacturer's technical information, including label analysis and instructions for handling, storing, and applying each coating material proposed for use.
3. Certification by the manufacturer that products supplied comply with local regulations controlling use of volatile organic compounds (VOCs).

B. Samples for Initial Selection: Manufacturer's color charts showing the full range of colors available for each type of finish-coat material indicated.

1. After color selection, the Architect will furnish color chips for surfaces to be coated.

Reviewed for Code Compliance
Inspections Division
Approved with Conditions
Date: 10/31/17

C. Samples for Verification: Of each color and material to be applied, with texture to simula actual conditions, on representative Samples of the actual substrate.

1. Provide stepped Samples, defining each separate coat, including block fillers and primers. Use representative colors when preparing Samples for review. Resubmit until required sheen, color, and texture are achieved.
2. Provide a list of materials and applications for each coat of each sample. Label each sample for location and application.
3. Submit Samples on the following substrates for the Architect's review of color and texture only:

   a. Concrete Masonry: Provide two 4-by-8-inch samples of masonry, with mortar joint in the center, for each finish and color.
   b. Ferrous Metal: Provide two 4-inch- square samples of flat metal and two 8-inch-long samples of solid metal for each color and finish.

D. Qualification Data: For firms and persons specified in the "Quality Assurance" Article to demonstrate their capabilities and experience. Include lists of completed projects with project names and addresses, names and addresses of architects and owners, and other information specified.

1.5 QUALITY ASSURANCE

A. Applicator Qualifications: Engage an experienced applicator who has completed painting system applications similar in material and extent to that indicated for this Project with a record of successful in-service performance.

B. Source Limitations: Obtain block fillers, primers, and undercoat materials for each coating system from the same manufacturer as the finish coats.

C. Mock-Up: Provide a 12 foot by 12 foot mock-up of each color specified in the following spaces:

1. Guestroom.
2. Corridors.
3. Bathrooms.
4. Level 5 finish spaces.

1.6 DELIVERY, STORAGE, AND HANDLING

A. Deliver materials to the Project Site in manufacturer's original, unopened packages and containers bearing manufacturer's name and label, and the following information:

1. Product name or title of material.
2. Product description (generic classification or binder type).
3. Manufacturer's stock number and date of manufacture.
4. Contents by volume, for pigment and vehicle constituents.
5. Thinning instructions.
6. Application instructions.
7. Color name and number.
8. VOC content.

Reviewed for Code Compliance
Inspections Division
Approved with Conditions
Date: 10/31/17

B. Store materials not in use in tightly covered containers in a well-ventilated area at a minim ambient temperature of 45 deg F. Maintain containers used in storage in a clean condition, free of foreign materials and residue.

1. Protect from freezing. Keep storage area neat and orderly. Remove oily rags and waste daily. Take necessary measures to ensure that workers and work areas are protected from fire and health hazards resulting from handling, mixing, and application.

1.7 PROJECT CONDITIONS

A. Apply water-based paints only when the temperature of surfaces to be painted and surrounding air temperatures are between 50 and 90 deg F.

B. Apply solvent-thinned paints only when the temperature of surfaces to be painted and surrounding air temperatures are between 45 and 95 deg F.

C. Do not apply paint when the relative humidity exceeds 85 percent; or at temperatures less than 5 deg F above the dew point; or to damp or wet surfaces.

1.8 EXTRA MATERIALS

A. Furnish extra paint materials from the same production run as the materials applied in the quantities described below. Package paint materials in unopened, factory-sealed containers for storage and identify with labels describing contents. Deliver extra materials to the Owner.

1. Quantity: Furnish the Owner with extra paint materials in the quantities indicated below:

a. Interior, Flat and Eggshell Acrylic Paint: One case of each color applied.
b. Interior, Low-Luster Acrylic Finish: One case of each color applied.
c. Interior, Semigloss and Highgloss Acrylic Enamel: 2 gal. of each color applied.
d. Interior, High Performance, Polyamide-Epoxy Coating: One case of each color applied.

PART 2 - PRODUCTS

2.1 MANUFACTURERS

A. Products: Subject to compliance with requirements, provide products by one of the following, or equal acceptable to the Architect:

1. Refer to finish schedules.

2.2 PAINT MATERIALS, GENERAL

A. Material Compatibility: Provide block fillers, primers, undercoats, and finish-coat materials that are compatible with one another and the substrates indicated under conditions of service and application, as demonstrated by manufacturer based on testing and field experience.

B. Material Quality: Provide manufacturer's best-quality paint material of the various coating types specified. Paint-material containers not displaying manufacturer's product

Reviewed for Code Compliance
Inspections Division
Approved with Conditions
Date: 10/31/17

identification will not be acceptable.

1. Proprietary Names: Use of manufacturer's proprietary product names to designate colors or materials is not intended to imply that products named are required to be used to the exclusion of equivalent products of other manufacturers. Furnish manufacturer's material data and certificates of performance for proposed substitutions.

C. Chemical Components of Field-Applied Interior Paints and Coatings: Provide products that comply with the following limits for VOC content, exclusive of colorants added to a tint base, when calculated according to 40 CFR 59, Subpart D (EPA Method 24) and the following chemical restrictions; these requirements do not apply to primers or finishes that are applied in a fabrication or finishing shop:

1. Flat Paints and Coatings: VOC content of not more than 50 g/L.
2. Nonflat Paints and Coatings: VOC content of not more than 150 g/L.
3. Aromatic Compounds: Paints and coatings shall not contain more than 1.0 percent by weight of total aromatic compounds (hydrocarbon compounds containing one or more benzene rings).
4. Restricted Components: Paints and coatings shall not contain any of the following:

   a. Acrolein.
   b. Acrylonitrile.
   c. Antimony.
   d. Benzene.
   e. Butyl benzyl phthalate.
   f. Cadmium.
   g. Di (2-ethylhexyl) phthalate.
   h. Di-n-butyl phthalate.
   i. Di-n-octyl phthalate.
   j. 1,2-dichlorobenzene.
   k. Diethyl phthalate.
   l. Dimethyl phthalate.
   m. Ethylbenzene.
   n. Formaldehyde.
   o. Hexavalent chromium.
   p. Isophorone.

   q. Lead.
   r. Mercury.
   s. Methyl ethyl ketone.
   t. Methyl isobutyl ketone.
   u. Methylene chloride.
   v. Naphthalene.
   w. Toluene (methylbenzene).
   x. 1,1,1-trichloroethane.
   y. Vinyl chloride.

5. Anti-corrosive and anti-rust paints: VOC content of not more than 250 g/L.
6. Block Filler Sealant: VOC content of not more than 150 g/L.
7. Floor Coatings: VOC content of not more than 100 g/L.

Reviewed for Code Compliance
Inspections Division
Approved with Conditions
Date: 10/31/17

D. Colors: Provide color selections made by the Architect and as scheduled in the Room Finis Code. Allow for 15 different colors.

PART 3 - EXECUTION

3.1 EXAMINATION

A. Examine substrates, areas, and conditions, with the Applicator present, under which painting will be performed for compliance with paint application requirements.

1. Do not begin to apply paint until unsatisfactory conditions have been corrected and surfaces receiving paint are thoroughly dry.
2. Start of painting will be construed as the Applicator's acceptance of surfaces and conditions within a particular area.

B. Coordination of Work: Review other Sections in which primers are provided to ensure compatibility of the total system for various substrates. On request, furnish information on characteristics of finish materials to ensure use of compatible primers.

1. Notify the Architect about anticipated problems using the materials specified over substrates primed by others.

3.2 PREPARATION

A. General: Remove hardware and hardware accessories, plates, machined surfaces, lighting fixtures, and similar items already installed that are not to be painted. If removal is impractical or impossible because of the size or weight of the item, provide surface-applied protection before surface preparation and painting.

1. After completing painting operations in each space or area, reinstall items removed using workers skilled in the trades involved.

B. Cleaning: Before applying paint or other surface treatments, clean the substrates of substances that could impair the bond of the various coatings. Remove oil and grease before cleaning.

1. Schedule cleaning and painting so dust and other contaminants from the cleaning process will not fall on wet, newly painted surfaces.

C. Surface Preparation: Clean and prepare surfaces to be painted according to manufacturer's written instructions for each particular substrate condition and as specified.

1. Provide barrier coats over incompatible primers or remove and reprime.
2. Gypsum Board Substrates: Knock off bulges, fill holes, level gouges and feather scaled paint areas as required to prevent telegraphing of substrate imperfections and achieve finish indicated, or if not indicated, as directed by the Architect. Do not begin paint application until finishing compound is dry and sanded smooth.
3. Existing Plaster Substrates: Knock off bulges, fill holes, level gouges and feather scaled paint areas as required to prevent telegraphing of substrate imperfections and to achieve finish indicated, or if not indicated, as directed by the Architect. Do not begin paint application until plaster is fully cured and dry.
4. Cementitious Materials: Prepare concrete masonry block surfaces to be painted.

Reviewed for Code Compliance
Inspections Division
Approved with Conditions
Date: 10/31/17

Remove efflorescence, chalk, dust, dirt, grease, oils, and release agents. Rough as required to remove glaze. If hardeners or sealers have been used to impro curing, use mechanical methods of surface preparation.

a. Use abrasive blast-cleaning methods if recommended by paint manufacturer.
b. Determine alkalinity and moisture content of surfaces by performing appropriate tests. If surfaces are sufficiently alkaline to cause the finish paint to blister and burn, correct this condition before application. Do not paint surfaces where moisture content exceeds that permitted in manufacturer's written instructions.

5. Ferrous Metals: Clean ungalvanized ferrous-metal surfaces that have not been shop coated; remove oil, grease, dirt, loose mill scale, and other foreign substances. Use solvent or mechanical cleaning methods that comply with the Steel Structures Painting Council's (SSPC) recommendations.

a. Blast steel surfaces clean as recommended by paint system manufacturer and according to requirements of SSPC-SP 10.
b. Treat bare and sandblasted or pickled clean metal with a metal treatment wash coat before priming.
c. Touch up bare areas and shop-applied prime coats that have been damaged. Wire-brush, clean with solvents recommended by paint manufacturer, and touch up with the same primer as the shop coat.

D. Materials Preparation: Mix and prepare paint materials according to manufacturer's written instructions.

1. Maintain containers used in mixing and applying paint in a clean condition, free of foreign materials and residue.
2. Stir material before application to produce a mixture of uniform density. Stir as required during application. Do not stir surface film into material. If necessary, remove surface film and strain material before using.
3. Use only thinners approved by paint manufacturer and only within recommended limits.

E. Tinting: Tint each undercoat a lighter shade to simplify identification of each coat when multiple coats of the same material are applied. Tint undercoats to match the color of the finish coat, but provide sufficient differences in shade of undercoats to distinguish each separate coat.

3.3 APPLICATION

A. General: Apply paint according to manufacturer's written instructions. Use applicators and techniques best suited for substrate and type of material being applied.

1. Paint colors, surface treatments, and finishes are indicated in the schedules.
2. Do not paint over dirt, rust, scale, grease, moisture, scuffed surfaces, or conditions detrimental to formation of a durable paint film.
3. Provide finish coats that are compatible with primers used.
4. The term "exposed surfaces" includes areas visible when permanent or built-in fixtures, convector covers, covers for finned-tube radiation, grilles, and similar components are in place. Extend coatings in these areas, as required, to maintain

Reviewed for Code Compliance
Inspections Division
Approved with Conditions
Date: 10/31/17

the system integrity and provide desired protection.

5. Paint surfaces behind movable equipment and furniture the same as sim exposed surfaces. Before the final installation of equipment, paint surfaces behind permanently fixed equipment or furniture with prime coat only.
6. Paint interior surfaces of ducts with a flat, nonspecular black paint where visible through registers or grilles.
7. Paint back sides of access panels and removable or hinged covers to match exposed surfaces.
8. Sand lightly between each succeeding enamel or varnish coat.

B. Scheduling Painting: Apply first coat to surfaces that have been cleaned, pretreated, or otherwise prepared for painting as soon as practicable after preparation and before subsequent sur-face deterioration.

1. The number of coats and the film thickness required are the same regardless of application method. Do not apply succeeding coats until the previous coat has cured as recommended by the manufacturer. If sanding is required to produce a smooth, even surface according to manufacturer's written instructions, sand between applications.
2. Omit primer on metal surfaces that have been shop primed and touchup painted.
3. If undercoats, stains, or other conditions show through final coat of paint, apply additional coats until paint film is of uniform finish, color, and appearance. Give special attention to ensure edges, corners, crevices, welds, and exposed fasteners receive a dry film thickness equivalent to that of flat surfaces.
4. Allow sufficient time between successive coats to permit proper drying. Do not recoat surfaces until paint has dried to where it feels firm, does not deform or feel sticky under moderate thumb pressure, and where application of another coat of paint does not cause the undercoat to lift or lose adhesion.

C. Application Procedures: Apply paints and coatings by brush, roller, spray, or other applicators according to manufacturer's written instructions.

1. Brushes: Use brushes best suited for the type of material applied. Use brush of appropriate size for the surface or item being painted.

2. Rollers: Use rollers of carpet, velvet back, or high-pile sheep's wool as recommended by the manufacturer for the material and texture required.
3. Spray Equipment: Use airless spray equipment with orifice size as recommended by the manufacturer for the material and texture required.

D. Apply concrete sealer to concrete surfaces in accordance with sealer manufacturer’s written instructions.

1. Do not leave excess sealer residue on treated concrete surfaces. Remove excess hardened sealer.
2. Do not use curing compound.
3. Do not dilute sealer.

E. Minimum Coating Thickness: Apply paint materials no thinner than manufacturer's recommended spreading rate. Provide the total dry film thickness of the entire system as recommended by the manufacturer.

Reviewed for Code Compliance
Inspections Division
Approved with Conditions
Date: 10/31/17

F. Mechanical and Electrical Work: Painting of mechanical and electrical work is limited to ite exposed in equipment rooms and in occupied spaces.

G. Mechanical items to be painted include, but are not limited to, the following:

1. Piping, pipe hangers, and supports.
2. Ductwork.
3. Insulation.
4. Motors and mechanical equipment.
5. Accessory items.

H. Electrical items to be painted include, but are not limited to, the following:

1. Conduit and fittings.
2. Panelboards.

I. Block Fillers: Apply block fillers to concrete masonry block at a rate to ensure complete coverage with pores filled.

J. Prime Coats: Before applying finish coats, apply a prime coat of material, as recommended by the manufacturer, to material that is required to be painted or finished and that has not been prime coated by others. Recoat primed and sealed surfaces where evidence of suction spots or unsealed areas in first coat appears, to ensure a finish coat with no burn through or other defects due to insufficient sealing.

K. Pigmented (Opaque) Finishes: Completely cover surfaces as necessary to provide a smooth, opaque surface of uniform finish, color, appearance, and coverage. Cloudiness, spotting, holi-days, laps, brush marks, runs, sags, ropiness, or other surface imperfections will not be accept-able.

L. Completed Work: Match approved samples for color, texture, and coverage. Remove, refinish, or repaint work not complying with requirements.

3.4 FIELD QUALITY CONTROL

A. The Owner reserves the right to invoke the following test procedure at any time and as often as the Owner deems necessary during the period when paint is being applied:

1. The Owner will engage the services of an independent testing agency to sample the paint material being used. Samples of material delivered to the Project will be taken, identified, sealed, and certified in the presence of the Construction Manager.
2. The testing agency will perform appropriate tests for the following characteristics as required by the Owner:

   a. Quantitative material analysis.
   b. Abrasion resistance.
   c. Apparent reflectivity.
   d. Flexibility.
   e. Washability.
   f. Absorption.
   g. Dry opacity.
   h. Accelerated yellowness.

Reviewed for Code Compliance
Inspections Division
Approved with Conditions
Date: 10/31/17

i. Recoating.
j. Skinning.
k. Color retention.
l. Alkali and mildew resistance.

2. The Owner may direct this Contractor to stop painting if test results show material being used does not comply with specified requirements. This Contractor shall remove non-complying paint from the site, pay for testing, and repaint surfaces previously coated with the rejected paint. If necessary, this Contractor may be required to remove rejected paint from previously painted surfaces if, on repainting with specified paint, the 2 coatings are incompatible.

3.5 CLEANING

A. Cleanup: At the end of each workday, remove empty cans, rags, rubbish, and other discarded paint materials from the site.

1. After completing painting, clean glass and paint-spattered surfaces. Remove spattered paint by washing and scraping. Be careful not to scratch or damage adjacent finished surfaces.

3.6 PROTECTION

A. Protect work of other trades, whether being painted or not, against damage by painting. Correct damage by cleaning, repairing or replacing, and repainting, as approved by Architect.

B. Provide "Wet Paint" signs to protect newly painted finishes. Remove temporary protective wrappings provided by others to protect their work after completing painting operations.

1. At completion of construction activities of other trades, touch up and restore damaged or defaced painted surfaces. Comply with procedures specified in PDCA P1.
   a. Use the schedules below as guides only. See the Evaluations for further discussion. Products listed in the schedules have been researched and evaluated and are believed to be comparable to products of other manufacturers listed. However, due to differences between different manufacturers' individual product formulas, some products listed may have some advantages or disadvantages when compared to similar products of other manufacturers. Base final product selection on coating.

C. Protect sealed concrete surfaces from traffic until sealer has cured.

3.7 PAINT SYSTEM SCHEDULE

A. Concrete Masonry Units: Provide the following finish systems over exposed interior concrete masonry block units :

1. Semigloss, High Performance, Polyamide-Epoxy Finish: Provide two coats with dry film thickness not less than 4 mils (0.1 mm).

   a. Block Filler: Acrylic based, block filler applied at spreading rate recommended by the manufacturer.

Reviewed for Code Compliance
Inspections Division
Approved with Conditions
Date: 10/31/17

1) Tnemec: Series 130 Envirofill Waterborne Cementitious Acrylic.

b. First and Second Coats: High Performance, polyamide-epoxy coating.

1) PPG: 97-1 Series Aquapon Polyamide Epoxy.
2) Moore: Ironclad Chemical and Water Resistant Epoxy Enamel 182.

2. Semigloss, Latex Eco-Spec-Enamel Finish: 2 finish coats over a block filler.

a. Block Filler: High-performance, latex based, block filler applied at spreading rate recommended by the manufacturer to achieve a total dry film thickness of not less than 5.0 mils.

1) Moore: Moorcraft Interior & Exterior Block Filler #173.

b. First and Second Coats: Semigloss, acrylic-latex, interior enamel applied at spreading rate recommended by the manufacturer to achieve a total dry film thickness of not less than 2.6 mils.

1) Moore: Moore's Pristine-EscopeVinyl-Acrylic Latex Semigloss 224.

B. Gypsum Board: Provide the following finish systems over interior gypsum board surfaces:

1. Matte Finish: 2 finish coats (ceilings only).

a. First and Second Coats: Matte, acrylic-latex-based, interior paint applied at spreading rate recommended by the manufacturer.

2. Low Luster Acrylic Eggshell Finish: 2 finish coats.

a. First and Second Coats: Eggshell, acrylic latex based, interior paint applied at a spreading rate recommended by the manufacturer.

3. Gypsum Board to receive vinyl wall covering finish:

a. Primer: One coat latex based, interior primer applied at a spreading rate to achieve a total dry film thickness of not less than 1.2 mils

C. Ferrous Metal: Provide the following finish systems over ferrous metal. Primer is not required on shop primed metal. Ferrous metals include, but are not limited to, steel doors and frames including elevator hoistway doors and frames, miscellaneous metal fabrications and supports and all other items of ferrous metals shown or specified:

1. Full-Gloss, Acrylic-Enamel Finish: 2 finish coats over a primer.

a. Primer: Quick-drying, rust-inhibitive, alkyd-based or epoxy-metal primer, as recommended by the manufacturer for this substrate, applied at spreading rate recommended by the manufacturer to achieve a total dry film thickness of not less than 1.5 mils.

1) Moore: IronClad Retardo Rust-Inhibitive Paint #163.

b. First and Second Coats: Full-gloss, acrylic-latex, interior enamel applied at

Reviewed for Code Compliance
Inspections Division
Approved with Conditions
Date: 10/31/17

spreading rate recommended by the manufacturer to achieve a total film thickness of not less than 2.5 mils.

1) Moore: Impervex Enamel #309.

2. Water based polyurethane(Scuffmaster).

a. Metallic series as scheduled.

D. Trim, Doors and Base: Provide the following finish systems over trim, doors and base:

1. Semi-Gloss Finish: 2 finish coats.

a. First and Second Coats: Semi-Gloss, acrylic-latex-based, interior paint applied at spreading rate recommended by the manufacturer.

E. Zinc-Coated Metal: Provide the following finish systems over zinc-coated metal:

1. Full-Gloss, Acrylic-Enamel Finish: 2 coats over a primer.

a. Primer: Galvanized metal primer applied at spreading rate recommended by the manufacturer to achieve a total dry film thickness of not less than 1.2 mils.

1) Moore: IronClad Galvanized Metal Latex Primer #155.

b. First and Second Coats: Full-gloss, acrylic-latex, interior enamel applied at spreading rate recommended by the manufacturer to achieve a total dry film thickness of not less than 2.5 mils.

1) Moore: Impervex Enamel #309.

F. Concrete Substrates: Provide the following finish system on concrete surfaces indicated to be painted:

1. Interior/Exterior Latex Floor and Porch Paint (Low Gloss): MPI #60 (maximum Gloss Level 3; VOC Content: E Range of E3; Environmental Performance Rating: EPR 3.

a. First and Second Coats: Moore's Latex Floor and Porch Paint.

G. Concrete Substrates, Traffic Surfaces: Provide the following finish system on concrete floor surfaces indicated to be painted including, but not limited to, Mechanical Rooms, Electric Ser-vice Rooms, Electric Closets, Electric Substation, Data Closets, Main Data Distribution Room, Main Telephone Distribution Room, Chemo Waste, Paint/Flammable Storage, Regulated Waste Holding, Soiled Linen Storage Room, Medical Gas Room, Building Management Equip-ment Room, Environmental Services Equipment Storage Room, Wheelchair Storage Repair, Biomedical Workshop and other spaces indicated on the Contract Drawings and the Finish Schedule:

1. High Performance, Polyamide-Epoxy Coating: Provide two coats with dry film thickness not less than 4 mils (0.1 mm).

a. First and Second Coats: High Performance, polyamide-epoxy coating

Reviewed for Code Compliance
Inspections Division
Approved with Conditions
Date: 10/31/17

1) PPG: 97-1 Series Aquapon Polyamide Epoxy.
2) Moore: Ironclad Chemical and Water Resistant Epoxy Enamel 182.

2. Water-Based Clear Sealer System: Provide the following two-coat clear sealer on concrete floors indicated to recieve seal-coat (SC) including, but not limited to, Staging Area, Breakdown Room, Loading Dock and other concrete floor surfaces indicated on the Contract Drawings and the Finish Schedule:

   a. Coat: Interior/exterior clear concrete floor sealer (water based).
   b. Topcoat: Interior/exterior clear concrete floor sealer (water based).

3.8 PAINT COLOR SCHEDULE

A. General: Provide paint colors as indicated on the Drawings and Finish Schedule.

END OF SECTION 09910

Reviewed for Code Compliance
Inspections Division
Approved with Conditions
Date: 10/31/17

SECTION 09960

HIGH-PERFORMANCE COATINGS

PART 1 GENERAL

1.01 SUMMARY

A. Section Includes:

A. Special coating for exterior and indoor pool area and exposed ferrous metals.

B. Epoxy Floor Coating

C. Concrete Stain/Sealer

D. This Section includes surface preparation and the application of special coating materials to items scheduled.

a. Surface preparation, prime and finish coats specified are in addition to shop-priming and surface treatments.

E. Paint all exposed surfaces, whether or not colors are designated, except where a surface or material is indicated not to be painted or is to remain natural. Where an item or surface is not mentioned, paint the same color as similar adjacent materials or surfaces. If color or finish is not designated, the Owner will select from standard colors or finishes available.

F. Painting is not required on pre-finished items, operating parts, or labels.

a. Labels: Do not paint over Underwriter's Laboratories, Factory Mutual or other code-required labels, or equipment name, identification, performance rating, or nomenclature plates.

B. Related Sections:

A. Section 03 30 00 (03300) - Cast-in-Place Concrete

B. Section 03 54 13 (03500) - Cementitious Decks and Underlayment

C. Section 05 52 00 (05520) - Handrails and Railings

D. Section 08 11 13 (08110) - Steel Doors and Frames

E. Section 09 90 00 (09900) - Painting

1.02 DEFINITIONS:

A. "Special Coatings" includes coating systems materials, primers, emulsions, enamels, stains, sealers and fillers, and other applied materials whether used as prime, intermediate or finish coats.

1.03 SUBMITTALS

A. Submit “Letter of Conformance” in accordance with Section 01 33 00 (01330) with the following supporting data:

A. Product Data: Submit manufacturer's technical information, including basic materials analysis and application instructions for each coating material specified.

Reviewed for Code Compliance
Inspections Division
Approved with Conditions
Date: 10/31/17

a. List each material and cross-reference the specific coating and finish system a application. Identify each material by the manufacturer's catalog number a general classification.

B. Color Charts: In duplicate, for all paints, stains and special coatings.

1.04 QUALITY ASSURANCE

A. Single Source Responsibility: Provide primers and undercoat paint produced by the same manufacturer, unless noted otherwise. Use only thinners recommended by the manufacturer, and only within recommended limits.

B. Coordination of Work: Review sections in which other coatings are provided to ensure compatibility of the total systems for various substrates.

A. Notify the Owner's Representative of problems anticipated using the materials specified.

C. All ferrous metal shall be inspected for conformance with these Specifications and manufacturer specifications shall be for:

A. Surface Preparation

B. Prime and Intermediate Coats

1.05 DELIVERY, STORAGE, AND HANDLING

A. Deliver materials to the job site in manufacturer's original, unopened packages and containers bearing manufacturer's name and label with trade name and manufacturer's instructions.

B. Store materials not in actual use in tightly covered containers at a minimum ambient temperature of 50 degrees F. in a well-ventilated area. Maintain containers used in storage of coatings in a clean condition, free of foreign materials and residue.

A. Protect from freezing. Keep storage area neat and orderly. Remove oily rags and waste daily. Take necessary precautionary measures to ensure that workmen and work areas are adequately protected from fire hazards and health hazards resulting from handling, mixing, and application of coatings.

1.06 PROJECT CONDITIONS

A. Apply coatings only when the temperature of surfaces to be coated and surrounding air temperatures are above 50 degrees F., unless otherwise permitted by manufacturer's printed instructions. High solids products require temperature range of 70-90 degrees F.

B. Do not apply coatings in snow, rain, fog, or mist, or when the relative humidity exceeds 85 percent, or at temperatures less than 5 degrees F. above the dew point, or to damp or wet surfaces, unless otherwise permitted by manufacturer's printed instructions. Allow wet surfaces to dry thoroughly and attain the temperature and conditions specified before proceeding with or continuing the coating operation.

1.07 WARRANTY

A. Provide a five-year material and labor warranty from the manufacturer and the applicator.

Reviewed for Code Compliance
Inspections Division
Approved with Conditions
Date: 10/31/17

PART 2 PRODUCTS

2.01 MANUFACTURERS

A. Epoxy Coating for Interior Concrete Floors:

a. The Sherwin-Williams Company or equal.

B. Approved Manufacturers:

A. Exterior and Interior Pool Exposed Ferrous Metals:

a. Tnemec

2.02 MATERIALS

A. Material Compatibility: Provide block fillers, primers, finish coats, and related materials that are compatible with one another and the substrates indicated under conditions of service and application as demonstrated by the manufacturer based on testing and field experience.

B. Exterior and Interior Pool and Ferrous Metals: All structural steel and metal fabrications, miscellaneous metal (including Lintels), handrails, uninsulated piping, mechanical and electrical equipment at exterior (including all component parts, but not including stainless steel or prefinished aluminum):

A. Shop Priming:

a. SP6 Commercial Blast

b. Primer: Tnemec Series 901K-97 Tnemec-Zinc at 3.0 mils DFT.

B. Field Application:

a. SP3 power tool clean

b. Spot Prime: Tnemec Series 901K-97, Tneme-Zinc.

c. Finish (required at exposed items only): Tnemec Series 113 (color) Tneme-Tufcoat 5.0 – 6.0 mils DFT. Color as selected by Owner's Representative. Apply one coat if spray applied, two coats if brush or roller applied.

C. Exterior Steel Doors and Frames (Galvanized):

A. Factory Primer (By Door Manufacturer)

a. To be sanded or abraded as recommended by Tnemec Co., Inc..

B. Tie Coat: “Clean ‘n Etch” pretreatment solution by Great Lakes Laboratories or equal.

C. Back-prime frames and all edges with Tnemec Series 66 HB Epoxoline at 2.0 mils DFT.

D. Finish: One coat Tnemec Series 113 Tneme-Tufcoat (Semi-Gloss Color) at 3.0 mils DFT.

2.03 COLOR SAMPLES:

A. The Contractor shall furnish samples of all finishes in triplicate and obtain the approval of color match before starting work. Final colors must match exactly with the approved sample. Colors selection and quantity of different colors, as shown on Drawings, and approved by Owner's Representative.

Reviewed for Code Compliance
Inspections Division
Approved with Conditions
Date: 10/31/17

PART 3 EXECUTION

3.01 EXAMINATION

A. Examine substrates and conditions under which painting will be performed for compliance with requirements. Do not begin application until unsatisfactory conditions have been corrected.

B. Start of coating work will be construed as the applicator's acceptance of surfaces within particular area.

3.02 PREPARATION:

A. Remove hardware and hardware accessories, plates, machined surfaces, lighting fixtures, and items in place that are not to be painted, or provide protection prior to surface preparation and coating. Remove items, if necessary, for complete painting of the items and adjacent surfaces. Following completion of coating operation, reinstall items removed using workmen skilled in the trades involved.

3.03 SURFACE PREPARATION:

A. Clean and prepare surfaces to be painted in accordance with manufacturer's instructions for each particular substrate condition.

B. Ferrous Metal: Clean ungalvanized ferrous metal surfaces that have not been shop-coated. Remove oil, grease, dirt, loose mill scale and other foreign substances. Use solvent or mechanical cleaning methods that comply with the recommendations of the Steel Structures Painting Council.

A. Blast-clean steel surfaces as recommended by the coating system manufacturer and according to the requirements of SSPC Specification SSPC-SP 10.

C. Galvanized Steel/Non Ferrous Metals: Utilize SSPC-SP1 solvent cleaning and chemical power wash (tri-sodium phosphate) to remove solvent and non-solvent soluble sealers and other substrate contaminants.

A. Touch-up shop-applied prime coats that have been damaged and bare areas. Wire-brush, solvent clean, and touch-up with the same primer as the shop coat.

D. Material Preparation: Carefully mix and prepare materials according to the coating manufacturer's directions.

A. Maintain containers used in mixing and application of coatings according to the manufacturer's directions.

B. Stir materials before applying to produce a mixture of uniform density. Stir as required during application. Do not stir surface film into the material. Remove film and, if necessary, strain the coating material before using.

3.04 APPLICATION

A. General: Apply special coatings by brush, roller, spray, squeegee, or other applicators according to the manufacturer's directions. Use brushes best suited for the material being applied. Use rollers of carpet, velvet back, or high-pile sheep's wool as recommended by the manufacturer for the material and texture required.

A. Do not apply coatings over dirt, rust, scale, grease, moisture, scuffed surfaces, or conditions detrimental to forming a durable coating film.

Reviewed for Code Compliance
Inspections Division
Approved with Conditions
Date: 10/31/17

B. Provide finish coats compatible with the primers used.

B. The number of coats and film thickness required is the same regardless of the application method. Do not apply succeeding coats until the previous coat has cured as recommended by the manufacturer. Where sanding is required, according to the manufacturer's directions, sand between applications to produce a smooth, even surface.

C. The term "exposed surfaces" includes areas visible when permanent or built-in. Extend coatings in these areas, as required, to maintain the system integrity and provide desired protection.

A. Coat surfaces behind movable equipment and furniture the same as similar exposed surfaces.

B. Coat the back sides of access panels, removable or hinged covers, and similar hinged items to match exposed surfaces.

D. Minimum Coating Thickness: Apply each material no thinner than the manufacturer's recommended spreading rate. Provide total dry film thickness (DFT) of the entire system as recommended by the manufacturer.

E. Prime Coats: Before applying finish coats, apply a prime coat of material, as recommended by the manufacturer, to the material required to be coated or finished that has not been prime-coated by others.

A. Recoat primed and sealed substrates where there is evidence of suction spots or unsealed areas in the first coat to ensure a finish coat with no burn-through or other defects caused by insufficient sealing.

F. Brush Application: Brush-out and work brush coats into surfaces in an even film. Eliminate cloudiness, spotting, holidays, laps, brush marks, runs, sags, ropiness, or other surface imperfections. Neatly draw glass lines and color breaks.

A. Apply primers and first coats by brush unless the manufacturer's instructions permit using mechanical applicators.

G. Mechanical Applications: Use mechanical methods to apply coating when permitted by the manufacturer's recommendations and governing regulations, only when approved by Architect.

A. Wherever using spray application, apply each coat to provide the equivalent hiding of brush-applied coats. Do not double-back with spray equipment building-up film thickness of two coats in one pass, unless recommended by the manufacturer.

H. All field connections such as bolts, nuts, and other fasteners shall be totally encapsulated with special coating system to match adjacent material.

3.05 FIELD QUALITY CONTROL

A. Applicator to maintain accurate records of the application and provide copies of the records to the manufacturer, if requested.

A. Minimum information required in the records:

a. Daily temperatures - morning and evening

b. Weather conditions

Reviewed for Code Compliance
Inspections Division
Approved with Conditions
Date: 10/31/17

c. Total area applied daily

d. Amount of materials used daily

e. Computed square foot coverage rate

B. Manufacturer's written instructions will be kept at job site. Before application begins, all personnel involved will read these instructions.

3.06 COMPLETED WORK:

A. Match approved samples for color, texture, and coverage. Remove, refinish, or repaint work not in compliance with specified requirements.

3.07 FIELD QUALITY CONTROL:

A. The Owner reserves the right to engage the services of an independent testing laboratory to sample paint material being used. Samples of material delivered to the project will be taken, identified, sealed, and certified in the presence of the Contractor.

B. The testing laboratory will perform appropriate tests as required by the Owner.

C. If tests shown that material being used does not comply with specified requirements, the Contractor may be directed to stop painting and remove non-complying paint, pay for testing, repaint surfaces coated with rejected paint, remove rejected paint from previously painted surfaces if, upon repainting with specified paint, the two coatings are non-compatible.

3.08 CLEAN-UP:

A. At the end of each work day, remove empty cans, rags, rubbish, and other discarded paint materials from the site.

B. Upon completion of painting, clean glass and paint-spattered surfaces. Remove spattered paint by washing, scraping, or other proper methods, using care not to scratch or damage adjacent finished surfaces.

C. Protect work of other trades, whether to be painted or not, against damage from painting. Correct damage by cleaning, repairing or replacing, and repainting, as acceptable to Owner’s Representative.

D. Provide "Wet Paint" signs to protect newly-painted finishes. Remove temporary protective wrappings provided by others for protection of their work after completion of painting operations.

A. At completion of construction activities of other trades, touch-up and restore damaged or defaced painted surfaces.

END OF SECTION

Reviewed for Code Compliance
Inspections Division
Approved with Conditions
Date: 10/31/17

SECTION 10260

WALL AND CORNER GUARDS

PART 1 GENERAL

1.01 SUMMARY

A. Section Includes:

1. Wall Protection Corner Guards

1.02 SUBMITTALS

1. Provide manufacturer's technical data, installation instructions, setting drawings, templates, instructions, and directions for installation of anchorage devices in other work.

1.03 DELIVERY, STORAGE, AND HANDLING

A. Do not deliver guards to site until rooms in which they are to be installed are ready to receive them.

B. Store packages to prevent physical damage or wetting.

C. Pack all parts individually in a manner to protect finish.

D. Maintain protective covers on all units until final clean-up.

1.04 WARRANTY

A. Work of this Section shall be jointly warrantied by the manufacturer and the installer for a period of one year after final payment. Any material or workmanship that is judged defective during this period shall be replaced at no cost to the Owner.

PART 2 PRODUCTS

2.01 MANUFACTURERS

1. Korogard Wall Protection Systems, or equal

2.02 WALL PROTECTION CORNER GUARDS

A. Surface mounted corner guards of various materials. Provide backing in walls for mounting.

B. Corner Guards: “Rigid extruded PVC, 90 degree type”; adhesive applied.

1. Size:

a. Guest Rooms: ¾” x ¾”. Thickness: 0.080”

b. Corridors: 1-1/2” x 1-1/2”. Thickness: 0.080”.

c. Height to be from top of resilient or carpet base to underside of ceiling with no gaps top or bottom.

1) Where ceiling heights are greater than 8'-0", provide corner guards in one piece, no joints or seams will be permitted.

2. Color: By Owner

3. Self-Adhesive tape application not permitted.

C. Stainless Steel Corner Guards, 90 degree type with 1/8” radius, adhesive applied.

Reviewed for Code Compliance
Inspections Division
Approved with Conditions
Date: 10/31/17

1. Locations: All public areas and back of the house.
2. Size: 3-1/2” x 3-1/2”
   a. Height to be from top of base to underside of ceiling.
3. Finish: No. 4, brushed finish
4. Attachment: Adhesive cement as recommended by manufacturer.

2.03 ACCESSORIES

A. Provide all appropriate mounting systems including all screws, bolts, brackets, end caps, and base plates as required for complete installation.

PART 3 EXECUTION

3.01 INSTALLATION

A. Attach retainers to wall with appropriate anchorage devices furnished by manufacturer. Snap-lock covers onto retainers after paint or wallcoverings have been applied.

B. Install guards, accessories, and items in accordance with manufacturer's printed instructions.

C. Use concealed fastenings wherever possible.

D. Install true, plumb, and level, securely and rigidly anchored to substrate in accordance with manufacturer's instructions for each item and each type of substrate construction.

   1. Attach with manufacturer’s recommended adhesive.

END OF SECTION

Reviewed for Code Compliance
Inspections Division
Approved with Conditions
Date: 10/31/17

SECTION 10400

SIGNAGE

PART 1 GENERAL

1.01 SUMMARY

A. Section Includes:

1. Interior and Exterior Graphic Plaques, Characters and Accessories.
2. Mounting Devices and Fittings.

1.02 REFERENCES

A. Reference American National Standard for Buildings and Facilities Providing Accessibility and Usability for Physically Handicapped People as published by the American National Standards Institute, Inc. - ANSI A117.1.

1.03 SUBMITTALS

1. A copy of the manufacturer's printed installation manual shall accompany Bid for review and approval by the Owner's Representative.
2. Shop Drawings showing sign layout, lettering style, materials, and other pertinent information.

1.04 QUALITY ASSURANCE

A. Graphic signs, including materials, fabrication, mounting and installation, shall conform to state and local code regulations and requirements.

1.05 DELIVERY, STORAGE AND HANDLING

A. Coordinate delivery of materials comprising the complete graphics package. Store materials upon approval of Owner. Take precautions to protect materials and be responsible for same until installed, inspected and accepted in writing by Owner.

1.06 PROJECT CONDITIONS

A. Inspection:

1. Examine areas for conditions detrimental to completion of the delivery and installation work. Report findings to the Owner’s Representative immediately. Do not proceed with work until unsatisfactory conditions have been corrected or until advised in writing by the Owner.
2. Starting work constitutes acceptance of conditions under which the work is to be performed. After such acceptance Contractor shall, at his own expense, be responsible for correcting all unsatisfactory and defective work resulting from such unsatisfactory conditions.

B. Coordinate work with all trades affected by Contractor's work and be fully cognizant of their requirements as pertaining to Contractor's work.

C. Perform all cutting and fitting necessary for installation and completion of the work while accommodating the work of other trades. Immediately repair damage to existing surfaces or finishes caused by work of this Contractor at no cost to Owner.

Reviewed for Code Compliance
Inspections Division
Approved with Conditions
Date: 10/31/17

1.07 WARRANTIES

A. All materials, finishes and workmanship shall be warranted for a period of two (2) years after final acceptance of the work. If during the warranty period, any defects or faulty materials are found, the Contractor shall immediately proceed at his own expense to replace and/or repair same at not cost to Owner.

PART 2 PRODUCTS

2.01 INTERIOR SIGNAGE MANUFACTURER/FABRICATOR

A. As specified by Owner

PART 3 EXECUTION

3.01 INSTALLATION

A. Sign items are to be cut out and assembled according to the design drawings.

B. Install signs specified herein in accordance with Owner' schedule requirements.

C. Coordinate installation with Owner.

D. Guestroom evacuation plaques shall be subsurface screened.

E. Signs shall be individually wrapped in protective coating and coded for installation coordination.

F. No items shall be delivered to the site without prior arrangement for receipt and security of the product delivered.

G. Items shall be inspected, adjusted and cleaned after final installation. Use protective coating over installed product if other work is ongoing at time of installation completion.

H. Provide cleanup and removal of debris resulting from the installation work.

END OF SECTION

Reviewed for Code Compliance
Inspections Division
Approved with Conditions
Date: 10/31/17

SECTION 10520

FIRE PROTECTION SPECIALTIES

PART 1 GENERAL

1.01 SUMMARY

A. Section Includes:

1. Fire Extinguishers and Brackets
2. Fire Extinguisher Cabinets
3. Hose Valve Cabinet
4. Accessories

1.02 REFERENCES

A. NFPA 10 - Portable Fire Extinguishers

1.03 SUBMITTALS

A. Submit product data which shall include physical dimensions, operational features, color and finish, anchorage details, rough-in measurements, location, and details.

B. Submit manufacturer's installation instructions.

1.04 QUALITY ASSURANCE

1. NFPA 10 - Portable Fire Extinguishers
2. UL 4A-60BC classification

1.05 OPERATION AND MAINTENANCE DATA

A. Do not install extinguishers when ambient temperatures may cause freezing.

PART 2 PRODUCTS

2.01 ACCEPTABLE MANUFACTURERS

A. Approved Manufacturers:

1. J. L. Industries, Inc. or equal.

2.02 EXTINGUISHERS:

A. Multi-Purpose, Dry-Chemical Type: Steel Tank, pressurized, including hose and nozzle; 10-pound, ABC classification, UL 4A/60BC.

2.03 BRACKET:

A. Furnish wall mount bracket where shown on Drawings complete with mounting hardware.

2.04 CABINETS:

A. Items specified below are by Larsen's Manufacturing Co.

1. Wall mounted on Bracket (FE): "MP10" Extinguisher with "B2" bracket.

Reviewed for Code Compliance
Inspections Division
Approved with Conditions
Date: 10/31/17

2. Semi-recessed Cabinet (FEC-1): "MP10" Extinguisher with "G-2409-6R"; semi-recess cabinet, projecting 2-1/2", rough opening of 10-1/2" x 25" x 4". With flame shield rated walls.

B. Cabinet: 18 gauge steel with acrylic thermosetting enamel finish, flat trim type with continuous hinged 1/4" acrylic plastic "Gemini" series door with black vertical letters on white background stating equipment in cabinet.

1. Provide lock similar to “Larsen-Loc” on all cabinets.
2. Color: Door and frame to be White.
3. Provide text “FIRE EXTINGUISHER” on side of cabinet where required by code.

C. Mounting Hardware: Appropriate to Cabinet

D. Fabrication

1. Form body of cabinet with tight inside corners and seams.
2. Pre-drill holes for anchorage.
3. Form perimeter trim and door stiles by welding, filling, and grinding smooth.
4. Hinge doors for 180 degree opening with continuous piano hinge. Provide pull handle and roller type catch.

2.05 FINISHES

A. Extinguishers: Red Enamel

PART 3 EXECUTION

3.01 INSPECTION

A. Verify rough openings for cabinet are correctly sized and located.

B. Beginning of installation means acceptance of existing conditions.

3.02 INSTALLATION

A. Install cabinets plumb and level in wall openings. Secure rigidly in place in accordance with manufacturer's instructions.

END OF SECTION

Reviewed for Code Compliance
Inspections Division
Approved with Conditions
Date: 10/31/17

SECTION 10670

METAL STORAGE SHELVING

PART 1 GENERAL

1.01 SUMMARY

A. Section Includes:

1. Metal Storage Shelving

1.02 SUBMITTALS

A. Submit "Letter of Conformance" in accordance with Section 01330) with the following supporting data:

1. Mark each copy to identify applicable products, characteristics, models, options and other supplemental data to clearly communicate information specific to this project.
2. Color Chart: Each product specified.

1.03 QUALITY ASSURANCE

A. Installer Qualifications: Manufacturer's authorized representative who is trained and approved for installation of units required for this Project.

B. Source Limitations: Obtain metal storage shelving through one source from a single manufacturer.

1.04 DELIVERY, STORAGE, AND HANDLING

A. Deliver metal storage shelving palleted, wrapped, or crated to provide protection during transit and Project-site storage.

1.05 PROJECT CONDITIONS

A. Environmental Limitations: Do not deliver or install metal storage shelving until spaces are enclosed and weatherproof, wet work in spaces is completed and dry, and ambient temperature is being maintained at the levels indicated for Project when occupied for its intended use.

1.06 COORDINATION

A. Coordinate locations and installation of metal storage shelving that may interfere with ceiling systems including lighting, HVAC, and sprinklers.

PART 2 PRODUCTS

2.01 STORAGE SHELVING

A. Approved Manufacturers:

1. "Open Clip Type Shelving" - Republic Storage Systems Company (800-477-1255)
2. "Clip - Support Shelving" - Adapto Storage Products, (800-923-2786)
3. "8000 Series" - - Lyon Workspace Products, LLC (800-433-8488)
4. "Clipper Shelving" - Penco Products, Inc (800-562-1000)

B. Design:

1. Stand alone clip type consisting of 4 angle posts, 2 back sway braces, 4 side sway braces and 6 shelves.
   a. 3'-0" Long Units: Minimum 800 pounds load capacity per shelf.
   b. 4'-0" Long Units: Minimum 550 pounds load capacity per shelf.

C. Components:

Reviewed for Code Compliance
Inspections Division
Approved with Conditions
Date: 10/31/17

1. Angle posts; 13 gage steel, with slots to receive shelf clips.
2. Shelves: 18 gage steel. Front and back shelf flanges turned down to accommodate 1" x 1" x 1" x 1/8" reinforcing angles.
3. Shelf Clips: Type recommended and used by shelving manufacturer for required loading.
4. Sway Braces: 1" x 1/8" band iron with holes at ends for attachment to shelving units.
5. Accessories: As required by classification, design and installation requirements.

D. Finish:

1. Factory finish in manufacturers standard color selected by Owner's representative.

E. Size and layout as indicated on the Drawings.

PART 3 EXECUTION

3.01 INSTALLATION

A. Set units plumb, level and square. Do not secure to adjacent walls. Adjust for rigidity.

END OF SECTION

Reviewed for Code Compliance
Inspections Division
Approved with Conditions
Date: 10/31/17

SECTION 10800

TOILET, BATH, AND LAUNDRY ACCESSORIES

PART 1 GENERAL

1.01 SUMMARY

A. Section Includes:

1. Toilet Accessories
2. Bath Accessories
3. Attachment hardware

B. Related Sections:

1. Section 05 50 00 (05500) - Metal Fabrications
2. Section 06 10 00 (06100) - Rough Carpentry: Blocking
3. Section 09 30 13 (09310) - Ceramic Tiling: Coordinate installation of accessories
4. Section 10 21 13 (10165) - Toilet Compartments: Coordinate installation of accessories

1.02 SUBMITTALS

A. Shop Drawings for each item.

1.03 REFERENCE STANDARDS

A. ASTM A167 - Stainless and Heat Resisting Chromium-Nickel Steel Plate, Sheet, and Strip.

B. ASTM A366 - Cold Rolled Carbon Steel Sheets, Commercial Quality.

1.04 QUALITY ASSURANCE:

A. Provide products of the same manufacturer for each type of accessory unit and for units exposed in the same area.

1.05 DELIVERY, STORAGE, AND HANDLING

A. Do not deliver accessories to site until rooms in which they are to be installed are ready to receive them.

B. Store packages to prevent physical damage or wetting.

C. Pack accessories individually in a manner to protect accessory and its finish.

D. Maintain protective covers on all units until final clean-up.

E. Protection: Protect adjacent or adjoining finished surfaces and work from damage during installation of work of this Section.

1.06 WARRANTY

A. Work of this Section shall be jointly warrantied by the manufacturer and the installer for a period of one year after final payment. Any material or workmanship that is judged defective during this period shall be replaced at no cost to the Owner.

Reviewed for Code Compliance
Inspections Division
Approved with Conditions
Date: 10/31/17

PART 2 PRODUCTS

2.01 MANUFACTURERS

A. Approved Manufacturers:

1. Kohler or Equal
2. Wingits LLC or equal
3. Franklin Brass or Equal
4. American Specialties Inc. or Equal
5. Mincey marble or Equal

2.02 MATERIALS - TOILET ACCESSORIES

A. All metal items to be Stainless Steel with Satin Finish.

B. Exposed surfaces to be protected with a factory applied PVC film to be left in place until final clean-up.

C. Mirrors to be 1/4" polished plate glass with 10-year guarantee against silver spoilage.

D. Stainless steel tubing: 18 ga., Type 304, seamless welded.

E. Fasteners, screws, and bolts: Hot dip galvanized. Expansion shields: Fiber, lead, or rubber as recommended by accessory manufacturer for component substrate.

F. Adhesive: Epoxy type contact cement.

2.03 FINISHES

A. Submit Finishes for Owner Approval.

2.04 FABRICATION - TOILET ACCESSORIES

A. Provide steel anchor plates and anchor components for installation on building finishes.

B. Form surfaces flat without distortion. Maintain flat surface without scratches or dents.

C. Back paint components where contact is made with building finishes to prevent electrolysis.

D. Hot dip galvanize ferrous metal anchors and fastening devices.

E. Shop assemble components and package complete with anchors and fittings.

2.05 PUBLIC RESTROOM ITEMS

A. Double Toilet Tissue Dispenser

To be American Specialties Inc. #AS 7305-2S x R009 or equal.

B. Coat Hook

To be American Specialties #AS 7382-S or equal to be mounted 6’-0” A.F.F. Provide additional Hook at 40” A.F.F. at entry door

C. Paper Towel Dispenser -Bobrick #B-72974 Universal Automatic Roll Towel Dispenser

Reviewed for Code Compliance
Inspections Division
Approved with Conditions
Date: 10/31/17

D. Sanitary Napkin Dispenser/Disposal

Shall be American Standard Model #AS 04684-50 or equal Factory installed coin operation denomination shall be 50 Cents

E. Surface Mounted Soap Dispenser – REMOVED- TO BE FF&E ITEM

F. Grab Bars

Grab bars to be #WPGB55SN, Bevel satin finish or equal. #WPG5SN, Halo, satin finish or equal. #WPGB5SN,Taper Satin Finish or equal. Proper backing/blocking is to be provided for secure installation. All grab bars must be securely anchored and capable of withstanding 250 lbs. of pull. Cement adhesive is not acceptable. Grab bars must have flange covers to conceal the mounting screws.

G. Surface Mounted Facial Tissue Dispenser to be Bobrick B-8397

GUEST ROOM ITEMS

H. Toilet Tissue Dispenser- To be Moen Kingsley #YB5488- Double toilet tissue dispenser

I. Robe Hook

Shall be Kohler Model #K-13433-CP or equal. Mount at 6'-0" AFF on the bathroom door. An additional robe hook, mounted as required by ADA, is to be provided in the accessible guest rooms.

J. Shower Rod

All guest bath shower rods (except ADA showers) are to have curved rods equal to Arcs and Angles #HBA60ARC91 60” Stainless Steel Finish. They must be mounted 6'-8" AFF to the centerline of the rod. The rod is typically mounted vertically centered on the back side of the tub edge. The rods must be permanently secured.ADA showers (not tubs) are to have straight rods equal to Franklin Brass #165

K. Grab Bars

Grab bars to be Wingit Innovations #WPGB55SN, Bevel satin finish or equal. #WPG5SN, Halo, satin finish or equal. #WPGB5SN,Taper Satin Finish or equal. Proper backing/blocking is to be provided for secure installation. All grab bars must be securely anchored and capable of withstanding 250 lbs. of pull. Cement adhesive is not acceptable. Grab bars must have flange covers to conceal the mounting screws.

L. Wall Mounted Soap Dishes

Two cultured marble soap dishes are required. Soap dishes must not have grab handles and should not be metal. For the shower only rooms, the soap dish shall be Mincey Marble SS-02 Corner Mount Shampoo Shelf in Matte Finish Color; Mincey Classic #2250 Solid White and must be placed in the corner on the showerhead wall (48" AFF) and a foot rest in the

Reviewed for Code Compliance
Inspections Division
Approved with Conditions
Date: 10/31/17

corner opposite the showerhead on the back wall (15" AFF) shall be Mincey marble FR-02 Corner Mount Foot Rest in Matte Finish Color; Mincey Classic #2250 Solid White. For the tub/shower combos, the shower height dish remains on the showerhead corner with the tub height dish Mincey marble SD-01 wall Mount Soap dish in Matte Finish Color; Mincey Classic #2250 Solid White centered on the back wall (24"AFF).

M. Towel Bar

All guest rooms with separate tub and vanity areas as well as accessible rooms require an additional towel bar, to be located in the vanity area. To be Kohler 13431-CP or equal. The light switches and receptacles at the vanity must not be concealed when towels are placed on the towel bar.

N. Tub Seat

Tub seats shall be Hafele America Co. HEWI 988.77.299-99 (White Finish) or Equal

PART 3 EXECUTION

3.01 PREPARATION

A. Deliver inserts and rough-in frames to job site and in appropriate time for building-in. Provide templates and rough-in measurements as required.

B. Before starting work, notify Owner's Representative in writing of any conflicts detrimental to installation or operation of units.

C. Verify with Owner's Representative exact location of accessories.

3.02 INSTALLATION

A. Install fixtures, accessories, and items in accordance with manufacturer's printed instructions.

B. Use concealed fastenings wherever possible.

C. Install true, plumb, and level, securely and rigidly anchored to substrate in accordance with manufacturer's instructions for each item and each type of substrate construction.

1. Wood blocking shall be provided at grab bars and fold down shower seats, and as shown on Drawings.

2. Strap metal may be used for all other areas, as approved by Owner's Representative, unless indicated otherwise.

D. Fasteners for all accessory mounting to be theft-resistant.

END OF SECTION

Reviewed for Code Compliance
Inspections Division
Approved with Conditions
Date: 10/31/17

SECTION 11521
MOTORIZED FRONT PROJECTION SCREENS

PART 1 GENERAL

1.1 SECTION INCLUDES

A. Electrically operated, ceiling recessed, front projection screens.

1.2 RELATED SECTIONS

A. Division 5 - Metal Fabrications: Suspension systems for projection screens.

B. Section 06 40 00 - Architectural Woodwork: Wood trim for recessed screen installation.

C. Section 09 22 26 - Suspension Systems: Supports and trim for suspended ceilings.

D. Section 09 21 16 - Gypsum Board Assemblies: Ceiling for recessed screen installation.

E. Section 09 51 00 - Acoustical Ceilings: Ceiling for recessed screen installation.

F. Division 16 for electrical wiring, connections, and installation of remote control switches for electrically operated projection screens.

1.3 REFERENCES

A. NFPA 70 - National Electrical Code.

B. NFPA 701-99 - Fire Tests for Flame-Resistant Textiles and Films.

C. GREENGUARD Environmental Institute Children & Schools.

D. US Green Building Council.

E. Cradle to Cradle Certified - Cradle to Cradle Products Innovation Institute.

1.4 SUBMITTALS

A. Submit under provisions of Section 01330.

B. [Product Data]: Manufacturer's data sheets on each product to be used, including:
   1. Preparation instructions and recommendations.
   2. Storage and handling requirements and recommendations.
   3. Installation methods.

C. Wiring diagram for electrically operated units.

D. Shop Drawings: Shop drawings showing layout and types of projection screens. Show the following:

Reviewed for Code Compliance
Inspections Division
Approved with Conditions
Date: 10/31/17

1. Location of screen centerline.
2. Location of wiring connections.
3. Seams in viewing surfaces.
4. Detailed drawings for concealed mounting.
5. Connections to suspension systems.
6. Anchorage details.
7. Accessories.
8. Frame details.

E. Selection Samples: For each finish product specified, two complete sets of color chips representing manufacturer's full range of available colors and patterns.

F. Verification Samples: For each finish product specified, two samples, minimum size 6 inches (150 mm) square, representing actual product, color, and patterns.

1.5 QUALITY ASSURANCE

A. Single Source Responsibility: Obtain each type of projection screen required from a single manufacturer as a complete unit, including necessary mounting hardware and accessories.

B. Coordination of Work: Coordinate layout and installation of projection screens with other construction supported by, or penetrating through, ceilings, including light fixtures, HVAC equipment, fire-suppression system, and partitions.

1.6 DELIVERY, STORAGE, AND HANDLING

A. Do not deliver projection screens until building is enclosed and other construction where screens will be installed is substantially complete.

B. Store products in manufacturer's unopened packaging until ready for installation.

C. Protect screens from damage during delivery, handling, storage, and installation.

1.7 COORDINATION

A. Coordinate work with installation of ceilings, walls, electric service power characteristics, and location.

PART 2 PRODUCTS

2.1 MANUFACTURERS

A. Acceptable Manufacturer: Draper, Inc., which is located at: 411 S. Pearl P. O. Box 425 ; Spiceland, IN 47385-0425; Toll Free Tel: 800-238-7999; Tel: 765-987-7999; Fax: 866-637-5611; Email: request info (drapercontract@draperinc.com); Web: www.draperinc.com

B. Requests for substitutions will be considered in accordance with provisions of Section 01330.

Reviewed for Code Compliance
Inspections Division
Approved with Conditions
Date: 10/31/17

2.2 MOTORIZED, CEILING RECESSED, FRONT PROJECTION SCREENS

A. Signature/Series V: Electric motor operated, extruded aluminum case, independently motorized closure, tab tensioned. Screen case extruded aluminum, white finish. UL approved "Suitable for use in environmental air space." Case size, 9-3/4 inches (248 mm) deep and 9-1/8 inches (232 mm) wide for screen sizes through 144 inches wide; 11 inches (279 mm) x 9-1/8 inches (232 mm) for larger screen sizes. Bottom of case fully enclosed by aluminum panels and motorized aluminum trap door with concealed hinges. Trap door supported entirely along front and back edges without crack around perimeter of door. Trap door opens into case when screen is lowered. Closure panels screw-attached to case and may be removed manually for access to roller and drive assembly.

1. Motor mounted inside screen roller on rubber isolation insulators. Motor UL certified, rated 110-120V AC, 60 Hz, three wire, instantly reversible, lifetime lubricated with pre-set accessible limit switches.
2. Quiet Motor mounted inside screen roller on rubber isolation insulators. Motor operates at 44db and is UL certified, rated 110-120V AC, 60 Hz, three wire, instantly reversible, lifetime lubricated with pre-set accessible limit switches.
3. Motor Screen Controls, UL certified.
   a. Single station control rated 115V AC, 60 Hz with 3-position rocker switch with cover plate to stop or reverse screen at any point.
   b. Low voltage control unit with three button 24V switches and cover plate to stop or reverse screen at any point.
   c. Low voltage 24V control unit with hand held RF remote three button control switch to stop or reverse screen at any point.
   d. Key Operated power supply switch to control power to control system.
   e. Locking switch cover plate for limited access to three position switch.
   f. Key operated 3-position control switch rated 115V AC, 60 Hz to stop or reverse screen at any point.
   g. Video Interface Control for use with equipment with a 115V switched outlet.
   h. Video Interface Control for use with equipment with a 6V switched outlet.
   i. Motor shall be left mounted.
4. Projection Viewing Surface:
   a. Grey XH600V – On Axis gain of 0.6. Provides excellent contrast and color reproduction. GREENGUARD for Children and Schools certified.
5. Tab-Tensioning System:
   a. Viewing surface with integrated tabs and cable on each side of fabric to provide tension and ensure flat viewing surface. Viewing surface and tabs CNC cut as a single piece. Tabs RF welded to the back of viewing surface to prevent tab separation. Tab adhesives are not acceptable. Viewing surface inserted into aluminum bottom dowel.
6. Viewing Area H x W.
   a. Audio Visual Format. Black masking borders are standard.
      1) 9 feet x 7 feet (4.27 m x 4.27 m).

Reviewed for Code Compliance
Inspections Division
Approved with Conditions
Date: 10/31/17

PART 3 EXECUTION

3.1 EXAMINATION

A. Do not begin installation until substrates have been properly prepared.

B. Verify rough-in openings are properly prepared.

C. If substrate preparation is the responsibility of another installer, notify Architect of unsatisfactory preparation before proceeding.

3.2 PREPARATION

A. Clean surfaces thoroughly prior to installation.

B. Prepare surfaces using the methods recommended by the manufacturer for achieving the best result for the substrate under the project conditions.

3.3 INSTALLATION

A. Install in accordance with manufacturer's instructions.

B. Install front projection screens with screen cases in position and relationship to adjoining construction as indicated, securely anchored to supporting substrate, and in manner that produces a smoothly operating screen with plumb and straight vertical edges and plumb and flat viewing surfaces when screen is lowered.

C. Test electrically operated units to verify that screen, controls, limit switches, closure and other operating components are in optimum functioning condition.

3.4 PROTECTION

A. Protect installed products until completion of project.

B. Touch-up, repair or replace damaged products before Substantial Completion.

END OF SECTION

Reviewed for Code Compliance
Inspections Division
Approved with Conditions
Date: 10/31/17

SECTION 11523

PROJECTOR LIFTS AND MOUNTS

PART 1 - **GENERAL**

1.1 SECTION INCLUDES

A. Motorized projector lifts.

1.2 ACTION SUBMITTALS

A. Refer to Section 01330 Submittal Procedures.

B. Product Data: For each type of lift, including manufacturer recommended installation procedures.

C. Shop Drawings: Include dimensions, method of attachment, structural support, bracing, and electrical wiring.

D. Samples: Provide finish samples.

1.3 CLOSEOUT SUBMITTALS

A. Refer to Section 01770 Project Closeout.

B. Maintenance data.

1.4 QUALITY ASSURANCE

A. Source limitation: Obtain motorized projector lifts from single manufacturer as a complete unit including necessary mounting hardware and accessories.

B. Motors for projector lifts shall be certified for use in the United States and Canada by Underwriters Laboratory (UL), Inc. and shall bear UL label.

C. Seismic Bracing: Motorized projector lift suspension components and method of installation shall comply with requirements for Seismic Zone (Refer to Structural Drawings).

1.5 DELIVERY, STORAGE AND HANDLING

A. Refer to Section 01600 Product Requirements.

Reviewed for Code Compliance
Inspections Division
Approved with Conditions
Date: 10/31/17

B. Deliver motorized projector lifts in manufacturer's original, unopened, undamaged containers with identification labels intact.

C. Inspect motorized projector lifts for freight damage, concealed or otherwise, upon delivery to project site. Report damage to freight carrier immediately for replacement of motorized projector lifts.

D. Store motorized projector lifts in resealed manufacturer's original containers.

PART 2 - **PRODUCTS**

2.1 MANUFACTURER

A. Draper, Inc.; 411 South Pearl Street; Spiceland, IN 47385-0425; Phone 765.987.7999; website www.draperinc.com

1. Subject to compliance with requirements, manufacturers of products of equivalent design may be acceptable if approved in accordance with Section 01330 Substitution Procedures.

2.2 MOTORIZED PROJECTOR LIFTS

A. Electrically Operated, Orbiting Lift: Electrically operated, ceiling recessed projector lift for rotating projector from ceiling storage location to position for show or service. Assembly to include controls, mounting hardware, wiring, and other components required for complete operation.

1. Basis-of-Design Product: Orbiter; Model B.

a. Maximum Lift Capacity: 26 lbs.

B. Operating Mechanism: Rotating closure panel operated by 12V DC quiet motor, instantly reversible, thermally protected, and lifetime lubricated motor.

C. Projector Attachment: Mounted at inside of closure panel to universal bracket suitable for projectors up to 26 lbs with adjustable arms that can be manipulated to fit most projectors with three or four mounting holes. Tilt, yaw and pan adjustments can be made quickly using spring-loaded bolts.

1. Basis-of-Design Product: Universal Projector Mount as manufactured by Draper, Inc.

D. Limit switches: Provide factory set limit switches to automatically stop travel at open and closed positions.

Reviewed for Code Compliance
Inspections Division
Approved with Conditions
Date: 10/31/17

E. Ceiling Closure Panel: Steel closure panel suspended below projector from rods attached operating pan. Closure mounted flush with adjacent ceiling surface and finished with white powder coat paint finish.

a. Trim: Metal trim ring to finish ceiling opening.

F. Environmental Airspace Housing: Fabricated from aluminum and steel panels for recessing projector lift in ceiling space used as return air plenum. Provide with universal closure and metal trim to finish ceiling opening.

G. Ceiling Access Door: Provide 24 by 24 inch (610 by 610 mm) hinged ceiling access door recessed to accept ceiling finish (gypsum panel) installed to allow access to projector and mount installed above ceiling.

2.3 CONTROLS

A. Single Station Control: Double-pole, double-throw wall switch.

1. Provide 1 control stations to lower, raise, and stop projector lift.
2. Radio Frequency Remote Control: Hand held 3 button control for up, down, and stop functions and receiver unit to connect to low voltage control unit.

B. Key Operated Power Supply Switch: Key operated switch to control power to mount operating switch. Provide with 2 keys.

PART 3 - EXECUTION

3.1 PREPARATION

A. Coordinate layout and installation of motorized projector lifts with ceiling construction and related components penetrating or above ceilings such as lighting fixtures, mechanical equipment, ductwork, and fire-suppression system.

B. Coordinate requirements for blocking, structural supports, bracing, and ceiling openings to ensure proper installation of motorized projector lifts.

C. Coordinate location and requirements for power supply conduit, and wiring required for motorized projector lifts and controls.

D. Coordinate installation of recessed motorized projector lifts with construction of suspended gypsum board ceilings specified in Section 09250 Gypsum Board.

E. Coordinate interface and installation of motorized projector lift controls with provision of motorized screen.

Reviewed for Code Compliance
Inspections Division
Approved with Conditions
Date: 10/31/17

3.2 INSTALLATION

A. Install motorized projector lifts and controls at locations and heights indicated on Drawings.

B. Install motorized projector lifts complete with necessary hardware, anchors, brackets and fasteners; according to manufacturer's written instructions and as specified.

3.3 TESTING AND DEMONSTRATION

A. Test motorized projector lifts to verify that lifts, controls, limit switches, closures, and other operating components are functional. Correct deficiencies.

B. Demonstrate operation of motorized projector lifts to Owner's designated representatives.

3.4 PROTECTING

A. Protect motorized projector lifts after installation from damage during construction operations. If damage occurs, remove and replace damaged components or entire unit as required to provide units in their original, undamaged condition.

END OF SECTION

Reviewed for Code Compliance
Inspections Division
Approved with Conditions
Date: 10/31/17

SECTION 13152
Swimming Pool – INDOOR

PART 1: GENERAL

1.01 RELATED DOCUMENTS

A. Drawings and general provisions of the Contract, including General and Supplementary Conditions and other Division 1 Specification Sections, apply to this Section.

1.02 DESCRIPTION OF WORK: work in this Section includes, but is not necessarily limited to furnishing and installing the following;

A. Pool & Spa Constructed of Gunite and Shotcrete System:
   1. The Pool Contractor shall be responsible for design and installation of indoor pool and spa system.

B. Pool Contractor shall be responsible for submitting and securing necessary approvals and permits, including payment of fees, and expenses for the preparation of any required documentation.

1.03 RELATED SECTIONS

A. Section 02300: Earthwork
B. Section 09310: Ceramic Tile
C. Division 15 and 16 Specifications for the following:

1. Excavation for electrical and plumbing lines.
2. Pool deck hose bibs.
3. Cold water supply with in pool equipment room. .
4. Gas line for pool heaters.
5. Conduit wiring receptacles and disconnects to the pool equipment room.
6. Pool and Spa heater flues.
7. Filter room, decks, sealing of joints between pool and deck, shall be provided as work of other sections.
8. Connection of floor & deck drains and hose bibs is specified in Division 15.
9. Connection of pool heater to gas source and heater vent piping in equipment room shall be performed by Contractor.
10. Provisions for combustion air (make-up).
11. Connection of automatic water fill system and fill spout cold water lines from water source in equipment room is specified in Division 15.

Reviewed for Code Compliance
Inspections Division
Approved with Conditions
Date: 10/31/17

12. Connection of all pool equipment. starters and switches: grounding pool, pool equipment, pool lights and niches, and wiring of pool lights from electrical panel in equipment room is specified in Division 16.

1.04 REFERENCES

A. Applicable requirements of the following Specifications and Codes apply to Work of this Section:
   1. National Spa and Pool institute (NSPI): Minimum Standards for Public Swimming Pools
   2. Local building and health codes.
   3. National Electrical Code (NBC).
   4. National Sanitation Foundation (NSF): Seal of approval program.
   5. Gunite Contractors Association (GCA): Technical Publication G-84. entitled Gunite and Shotcrete.
   6. American Society for Testing and Materials (ASTM): Specifications referenced herein.
   7. American. Society of Mechanical Engineers (ASMB) Coding and Labeling.
   8. Tile Council of America, Inc. "Handbook for Ceramic Tile Installation".

1.05 SYSTEM DESCRIPTION

A. System shall include:
   1. Provide systems of fully compatible components and construction methods required for complete and operable systems for indoor swimming pool & spa including but not limited to excavation. De-watering of construction area and removal of excess earth from site.
   2. Gunite and shotcrete shell.
      a. Finish Plaster Mix.
   3. Excavating, hauling, backfilling grading and incidental earthwork in conjunction with the construction of the swimming pool.
      a. Handle and dispose of excess materials, regardless of type, character or composition.
   4. Connections of water and gas to pool equipment.
   5. Connections of motors, pumps, compressors, switches and timers. Lights and wiring necessary for interfacing of equipment.
   6. Pool Equipment.
      a. Filter System
      b. Flow Meters
      c. Water Treatment Systems
      d. Heaters
      e. Recirculation Pumps and Motora
      f. Piping
      g. Fittings. Lights and Accessories
      h. Deck Drain System

Reviewed for Code Compliance
Inspections Division
Approved with Conditions
Date: 10/31/17

1.06 SUBMITTAL

A. Product Data:
   1. Manufacturer's technical literature with installation and storage institutions for each product specified.
   2. Pumps: Pump performance curves indicating GPM vs, TDH maximum efficiency point, and maximum an amperage draw, together with current characteristics and service factor of motor.

B. Shop Drawings:

   1. Submit the following Shop Drawings to the Owner's Agent for approval:
      a. Complete design of swimming pool, including all component parts, attachments devices, or other work, filtration filter, size, turn-over
      capacity and supporting calculations.
      b. Foundation plan and details and Sections through pool shall be included.
      c. Mechanical Schematic.
      d. Detail for ladder and pool wall interface.
   2. Show all shop erection details.
   3. All Shop Drawings shall be certified and sealed by a Professional Engineer, registered in the state in which the project is being submitted.
   4. The pool manufacturer shall certify to the Owner that the depth and configuration of the pool is acceptable and compatible with all known safety standards for the manufacturer’s designed product.

C. Samples:
   1. Precast concrete pool coping deck and in spa deck, One-l2 inch long section of coping, complete with stenciled depth marking (markings shall be on top of coping and side of pool- provide depth markings/and no dive symbols in both English and Metric)
   2. Submit three (3) samples of each type and color of tile required.

D. Quality Control:
   1. Design Data:
      a. Hydraulic analysis: Engineer's sealed calculations and total dynamic head (TDH) for swimming pool system for equipment other than that specified.
      b. Structural analysis: Engineer's sealed calculations and analysis for pool concrete design.

Reviewed for Code Compliance
Inspections Division
Approved with Conditions
Date: 10/31/17

E. At the completion of the work, tile Pool Contractor shall furnish to the Owr two bound copies of an operation manual. Minimum content of these manuals shall be:
   1. Operating Instructions.
   2. Equipment Literature with Parts Listed of all Equipment.
   3. Water Chemistry Procedures.
   4. Suggested safety Procedures.
   5. Repainting Refinishing Procedures.
   6. Include Chemical Analysis of Source Make-Up Water Supply.
   7. Copies of Manufacturer's Warranties.
   8. Test Reports.
   9. Sealed Engineer's Drawings.
   10. Certificates: From Local Authorities Indicating that Pool Construction and Performance Conforms to Requirements of Respective Authorities.

F. At the completion of the work, the Pool Contractor shall fill the pool with water and instruct the Owner's operating personnel in the operation of all equipment.

G. The Pool Contractor Shall test the Owner's natural water supply and furnish and supply start-up chemicals as required for start-up, including chorine and requirements to balance total alkalinity and calcium hardness, and shall obtain same.

H. The Pool Contractor shall provide a "Certified" start-up of the pool and all equipment.

1.07 QUALITY ASSURANCE

A. All work under this Section must be performed by a Contactor experienced and regularly engaged in building, commercial swimming pools. Contractors bidding this work must have completed five (5) projects within the past ten years equal to or larger than this project.

B Pool specifications and related pool drawings are to be considered as performance guidelines only meeting minimum requirements which may change as result of local code and health department requirements.
   1. The project Drawings and Specifications supplement each other. In the event of a conflict the Specifications shall govern. Piping locations are schematic. Precise locations of piping shall be determined by actual field condition. Fittings are not shown. The Pool Contractor shall include all fittings normally required for a complete system.
   2. This contractor shall be responsible for reviewing the complete Set of Contract Documents and coordinate work with other trades.

C. All work under this Section shall be inspected and installed in accordance with all current local and, state codes and regulations.
   1. The Pool Contractor shall obtain the following:
      a. Board of Health Design Approvals
   b. State Board of Health Inspections and Final Approvals

Reviewed for Code Compliance
Inspections Division
Approved with Conditions
Date: 10/31/17

c. Structural and Electrical Inspections and Final approvals on his Porti the work.

D. The standards of these Plans and Specification are intended to provide the Owner with a low maintenance pool.

E. Pool Contractor to be responsible for design and installation of pools, including layouts, routing of piping, as well as the proper location and quantities of required accessories. Responsibilities also include necessary valves, devices, and controls for pool system as required.

F. Contractor's design drawings must be sealed and signed by a licensed Engineer registered in State in which project is being constructed

G. Contractor shall submit, on his letter head, a list of all variations and deviations he finds that differ between local code requirements and bid drawings.

1.08 PROJECT CONDITIONS

A. Coordination: Coordinate this work with the work of other Sections to avoid any delay or interference with other work.

1. Filter room, decks, sealing of joints between pool and deck, fencing and landscaping shall be provided as work by other Sections.
2. Connection of all pool equipment, starter and switches: grounding of pool, pool equipment, pool lights and niches, and wiring of pool lights shall be preformed by Pool Subcontractor from electrical panel in equipment room.
3. Connection of floor drains, deck drains and hose bibs shall be provided as work of other Sections.
4. Connection of pool heater to gas source and heater vent piping in equipment room shall be performed by Pool Subcontractor.
5. Provisions for combustion air will be provided as work by other Sections.
6. Connection of automatic water fill system and fill spout cold water lines from water source in equipment room shall be performed by Pool Subcontractor.

B. Lines, Grades, and Elevations:

1. The General Contractor shall establish a bench mark for elevations and control points for measurements and layouts. The Pool Contractor shall be responsible for lines, grades and measurements from these points required for the installation of the pool

C. Utilities:

1. The Contractor shall supp1y the water required for construction and filling and testing of the pool from permanent accepted system.

1.09 WARRANTY

A. The Pool Contractor shall warranty his work against defects in labor and

Reviewed for Code Compliance
Inspections Division
Approved with Conditions
Date: 10/31/17

equipment, including paint, for a period of one year from Substantial Completion. Substantial Completion shall be defined. as the date of acceptance by the Owner or initial usage, whichever occurs first. This warranty shall not include minor defects that do not affect the use of the pool such as scratches minor dents, or concrete curing cracks.

PART 2: PRODUCTS.

2.01 MANUFACTURERS: The following manufactures are approved for as identified in the individual paragraph below:

A. Approved Manufactures:

1. A&B rush
2. American Olean tile Co, (800-933-8453)
3. American Products
4. Anchor Industries, Inc, (800-544-4445)
5. Berkeley (Sta-Rite Water Systems) (888-237-5353)
6. Bio-Lab, Inc. (404-378-1753)
7. Blue 'White Industries (714-893-8529)
8. Cal-June, Inc. (888-237-5353)
9. Dal- Title Corp (630- 789- I 479)
10. Degroot Studios (954-587-5487)
11. Federal Stone (800-513-5030)
12. Frost Co. (800-248-0325)
13. Gould Pumps, (315-568-2811)
14. Grace Construction Products (800-778-2880)
15. Hydrotech Chemical Co. (800-195-7946)
16. Mameco International, Inc, a Division of Tremco, Inc. (800-321-6412)
17. Mar-Max
18. Mec-O-Matic (Pulsafeeader) (800-333-6677)
19. Mortex Manufacturing. Inc. (800-338-3255)
20. PAC-FAB, Inc. (see paragon aquatics) (800-983-7665)
21. Paragon Aquatics, a Division of PAC-FAB, Inc, (914-452-5500)
22. Purex (724-863-8005)
23. Quaker Plastic Corporation (888-288-6644)
24. Rainbow (845~890-8320)
25. Raypak, Inc. (818-889-1500)
26. George Fischer Signet Scientific Co. (800-854-4090)
27. Spectrum Pool Products (800-776-5309)
28. Spiralock
29. Sta-Rite Pool/Spa Group (800-752-0183)
30. Stenner
31. Swan Manufacturing (800-325- 7008)
32. Swimquip (see Sta-Rite Pool/Spa Group) (800-752-0183)

Reviewed for Code Compliance
Inspections Division
Approved with Conditions
Date: 10/31/17

33. Taylor Devices, Inc. (716-694-0800)
34. Telodyne Laar (415-382-8220)
35. Whitten (Aquatic Development Group) (518-783-0038)
36. W.R. Meadowss. Pool Deck Const. Prod. (800-542-7665)
37. VAC PAK (800-877-1824)

2.02 POOL STRUCTURE -GENERAL

A. Size of pool shall be as shown on Drawings.
B. Joint sealant shall be polyurethane, **Mameco Vulkem No. 45**.
C. Ceramic Tile: Tile used in conjunction with surface in contact with water shall be furnished and installed by pool Contractor.

2.03 POOL & SPA MATERIALS

A. Concrete:
1. Definitions:
a. **Gunite;** Dry mix. Original1y a trade name used to designate a mixture of Portland cement and sand thoroughly mixed dry, passed through a cement
gun and conveyed by air through a flexible tube, hydrated at the nozzle and placed by air pressure.
b. **Shotcrete:** Wet-mix. Transit-mix (ready-mix) combination of Portland cement aggregates and water, pumped in a plastic state to the nowle, where air is added to place the material.
2. Materials and mixes for Gunite and Shottcrete shall conform to GCA publication G-84.
3. Gunite:
a. Aggregate: ASTM C 33, washed sand; clean, hard, sharp particles, well graded in size within the following limits:

SIZE	PERCENT BY WEIGHT
Passing through 3.8 inch screen	100
Passing through No.4	95 to 100
Passing through No.8	65 to 90
Passing through No. 16	45 to 75
Passing through No. 30	30 to 50
Passing through No. 50	10 to 22
Passing through No. 100	2 to 8

b. Mix one part cement to 4 ½ parts of sand based on dry, loose volume (minimum 3,000 psi compressive strength in 28 days).
c. Portland cement and water: specified hereinafter.
4. Shotcrete:

Reviewed for Code Compliance
Inspections Division
Approved with Conditions
Date: 10/31/17

a. Transit mix (ready-mix) materials conforming to aggregate specified above for "Gunite" and with the additional following grading for pea gravel:

Sieve Size	Percent by Weight
1/2"	100
3/8"	90

b. Mix Strength: Minimum 5,000 psi compressive strength in 28 days.
c. Submit design mix and certify material for weight, water content and mixing time.
d. Portland Cement and Water. As specified hereinafter.

5. Portland Cement; ASTM C 150, Type r or II.
6. Water: Potable
7. Forms: Exterior plywood, APA-B8 Plyform Class 1, mill-oiled.
8. Form Oil: Lacquer or resin type compatible with mill-oil.
9. Reinforcing Steel: ASTM A 615 grade 40.
10. Gauging Wire: Piano wire, 0.027" thick

B. Ceramic Tile:

1. "No Diving"(International Symbol) and Depth Marker Tiles:
   a. DeGroot Studios, (945-587-5487)
2. Unglazed Ceramic Mosaic tile at step Nosings:
   a. Approved Manufacturers:
      1. Dal- Tile
      2. American Clean Tile Co.
3. Provide certification by Manufacturer for use in pools.
4. 2"x 2" at water line below coping cap and at spa seating areas refer to (Interior Finish Index). See Drawings for location of special 8"x 8" tile with 6" high silk screened depth marking in feet and inches are required by local and state public swimming pool codes. Adjacent to each depth marker, provide international symbol "No Diving" sign tile. "No Diving tile shall be 8"x 8" for skim-line and 8" x 8" for deck (non-slip) white ceramic with black lettering and markings and a red circle with cross hatch.
5. Depth markings and no diving tiles shall be placed on the vertical pool walls as part of the 8” tile band below the coping so as to be easily readable from waterside. Depth markings and "No Diving” tiles on horizonta1 surface of deck, shall be within 18" of the water edge and positioned to be read while standing on the deck facing the water. Pool markings shall be placed at maximum and minimum depths, all points of slope change, and even foot of depth increment. Markers shall be spaced at no more than 25-foot intervals and arranged to be uniformly located at the ends and sides of pool.

Reviewed for Code Compliance
Inspections Division
Approved with Conditions
Date: 10/31/17

6. 2" x 2" non-slip unglazed ceramic mosaic tile in color as shown in In Finish Index at step nosings forming a 2" horizontal and 2" vertical band.
7. Tile Mortar and Grout: as specified in section 0931 a-Ceramic Tile.
8. Refer to Interior Finish Index for colors.

C. Finish Plaster Mix: White marble, White waterproof cement and bonding agent.

D. Sealant and Back-Up Material: See Section 07920 –Sealants.

E. Precast Concrete Pool and Spa Coping.
   1. Precast concrete, wet pour, white, 12" wide x minimum 2' long bull nosed coping stone with raised slip resistant pattern on upper surface. Provide one-piece radius comers.

2.04 FILTER SYSTEM

A. Pressure Filters:
   1. Approved Manufacturers:
      a. Pac-Fab
      b. Sta-Rite
      c. Approved Substitution
   2. Filter systems: Listed as approved by the National Sanitation Foundation for sand filters at flow rates of 20 GPM per square foot of filter area and bear the National Sanitation Foundation Seal of Approval. Maximum filter flow rate shall not exceed 15 GPM per square foot of filter area.
   3. Filter or Filter Battery Stainless steel of fiberglass hi-rate pressure sand filters.
   4. Include with each filter top mounted influent pressure gauge, reading 0 to 60 psi, manual air release valve, multi-port dia. valve, backwash site glass and transparent dame top.

B. Filter Media: Sand, with an effective size of 0.45 to 0.55 mm with uniformly coefficient of 1.6 maximum.

C. Filter Face Piping:
   1. Pipe, valves and fittings shall make a complete unit or battery from inlet to outlet.
   2. Arrange piping to carry out operations of filtering, backwashing and by-pass of filter for pool draining.
   3. Face pipe and fittings: PVC SCH 40.

2.05 FLOW METERS

A. Flow Meter;
   1. Approved Manufacturers:
      a. Pac-Fab
      b. Sta-Rite
      c. "CF-300 Series; Blue White Industries, pilot tube type.
      d. Approved Substitution by Signet Scientific Co.

2.06 WATER TREATMENT SYSTEM

A. Chemical Feeder:

Reviewed for Code Compliance
Inspections Division
Approved with Conditions
Date: 10/31/17

1. Approved Manufacturers:
   a. Model CB8-19 "SpaBrom" - Hydrotech
   b. Approved Substitution
2. Included in-line flow meter, flow control valve, clear dome top and shut-off valves on both sides of feeder.
3. Quantity: Two-One at spa; one at pool.

B. Chemicals
1. Approved Manufacturers:
   a. “SpaBrom" bromine sticks" Hydrotech 20 lb.
   b. Approved Substitution

C. Test Kit:
1. Approved Manufacturers:
   a. "No. 1744H" .Taylor
   b. 1'4940" -Bio-Lab
   c. Approved Substitution

2.07 POOL HEATERS

A. Pool Heaters:
1. Approved Manufacturers:
   a. Teledyne Laars
   b. Raypak
   c. Approved Substitution

B. Heaters:
1. Size for pool as shown on the Drawings, complete. Design based on maintaining a temperature of 80 degreed F.
2. Heaters must be A.S.M.E. coded and labeled. .

C. Furnish in-line thermometer with 2 degrees F. intervals and a minimum range of 60-120 degrees F.

2.08 RECIRCULATING PUMP AND MOTOR

A. Pumps:
1. Approved Manufacturers:
   a. Sta-rite
   b. Purex
   c. Pac-Fab
   d. Approved Substitution

B. Pump Motors:
1. Energy efficient. UL listed "E-plus Century"; Gould Pump Inc.
2. Electrical Characteristics: As shown on Drawings

2.09 PIPING

A. Piping within filter room: Polyvinyl chloride (PVC), Type 1-1220, Schedule 40 IPS, Class #135 N.S.F. approved and labeled.

B. Pool fill line: Schedule K copper

Reviewed for Code Compliance
Inspections Division
Approved with Conditions
Date: 10/31/17

C. Filtered water supply piping to pool: Schedule 80 PVC N.S.F. approved

D. Filter connection piping which connects the filter plant to the filter pump and to the recirculation piping, backwash piping and other piping associated with filter system: PVC. Type 1-1220. Schedule 40 IPS, Class #135 N.S.F. approved and labeled,

E. Fittings for PVC pipe: Whenever PVC pipe is used; all fittings shall be heavy weight. Schedule 40 of same manufacture as PVC pipe used.

F. NOTE: The first 24" of piping coming from pool heater shall be copper. Where the copper connects to PVC piping, after the 24", provide a copper to PVC transition .connection.

G. Valves:
   1. Small Valves (up to and including 2-1/2" in size): Gate valves, all brass with threaded ends for ferrous pipe, 1251b. Non-rising stem type.
   2. Large Valves (larger than 2 1/2 "); Rubber lined. cast iron. water type butterfly valves. Valves shall be hand operated with cadmium plated ductile iron discs. stainless steel stems and pins, and Buna-N seats and rated for 125 psi.
   3. Valve extension stems and key~: Provide as required to operate the system.
   4. Pipe identification: plastic tags for valves in filter room. .

H. Pipe Joints:
   1. Cement and thinners; Use for marking solvent welded joints. Of type compatible kind of piping used.
   2. Teflon tape (.003" min thickness): Use on the male threads of threated pipe joints.

.

I. Fillers and levelers; Provide instrumental sensors and valves to automatically fill and maintain level of pool complete with wiring and controls.

J. Chemical feed and heater controls: Provide instrumentation sensors and valves to automatically feed chemicals and maintain temperature of pool complete with wiring and controls.

2.10 SCHEDULES OF POOL FITTINGS, LIGHTS AND EQUIPMENT ACCESSORIES

Description	Manufacturer	Model Number
A. Pool Fittings		
1. Floor Inlet	Frost	A-41014
2. Pool Wall Inlet	Swimquip	8429
3. Auto Water Level Control	Mar-Max	LTC 0O24S
4. Hydrostat Valve 1-1/2"	Frost	A-414452
5. Hydrostat Tube 1-1/2"	Swimquip	7017-157
6. Skimmer 1-1/2"	American Prod.	844201

Reviewed for Code Compliance
Inspections Division
Approved with Conditions
Date: 10/31/17

7. Fill Spout 1"	Frost	A-41240
8. Pool Main Drain Sump	Swimquip	7017 -0103
9. Pool Main Drain Grate	Swimquip	7010741

B. Underwater Lights:

1. l00W/300W/12VLight (TWO)	Purex	PHL-301/PHL-300
2. Light Niche	Purex	425.4

C. Deck Fittings:

1. Grab Rail 1-1/2 II dia with smooth grip finish	Swan Mfg.	DMS-100B
2. Deck Anchor	Swan Mfg.	IAS-100B
3. Escutcheon Plate	SwanMfg,	IEP-100
4. Ladder 3 tread with Mirror finish Provide every 75' at perimeter	Swan Mfg.	LFB -24 -3B

D. Maintenance Accessories:

1. Vacuum Cleaner Head Swivel Wheel	Rainbow	Flex-A-Vacuum
2. Vacuum Hose Heavy Duty	Spiralock	1-1/2" X 35'.
3. Vacuum Pole	Rainbow	#812-168"-16"
4. Utility Pole	Frost	A40177-2
5. Curved Wall Brush 18'	A&B Brush	600/900
6. Algae Brush	A&B Brush	512/912
7. Pole Adapter	Frost	A-41420w/brass bolts & wing nuts
8. Deck Swab	Halogen Supply	48" CR Rubber
9. Brush Stabilizer	A&B Brush	Water Foil

E. Safety Accessories:

1. Life Buoy (24" Approx.)	Cal-June Inc.	U.S.C.G.
2. Throw Line (40, min)	Berkley Mfg.	B&W ¼"
3. Life Hook	Rainbow	#153 Double Arm
4. Life Hook Pole	Rainbow	820-16
5. Life Hook Pole Adapter	Frost	A-14420 w/brass bolts & wing nuts
6. Spine Board w/Ties		
7. 16 Unit First aid Kit		

2.11 DECK DRAIN SYSTEM

Reviewed for Code Compliance
Inspections Division
Approved with Conditions
Date: 10/31/17

A. Deck Drain System
   1. Approved Manufactures:
      a. “Deck-O-Drain”, W.R. Meadows, Pool Deck Construction Prod. (800-542-7665)
      b. "Deck Drain A Way System II™, Quaker Plastic Corp. (888-288-6644)
      c. "Drain Rite" Mortex Manufacturing (800-338-3255)
      d. Approved Substitution

B. Material
   1. Heavy wall, bondable, non-corrosive PVC
   2. Provide all nailing clips, couplers & fittings, end adapters, clean-o out plugs and protective tape over drain surface.

C. Size: +/- 1- ½ " x 3 ¼ " high x min. 8 ft. lengths, Center Channel

D. Color: As selected by Owner's Representative

2.12 HANDICAP LIFTS (One hole for Pool and One hole for Spa to accept lift):

A. Handicapped Lift:
   1. Approved Manufacturers:
      a. "Model WC-7C2" -Whitten Corporation
         1). "Model WC-HSP-3R, cast floor sleeve.
         2). "Model WC~HSP-5", Swimming Pool Extension Arm.
         3). "WC-112-D", Seat, chains, 24" swivel bar, and components
      b. Economy-Lift", Spectrum Pool Products
      c. Approved Substitution

B. Hydraulic therapy lifter, stainless steel frame with a capacity to support. 400 LB with the horizontal arm fully extended.

C. Provide lifter and all components required for a complete and operational installation. Provide sleeves in deck at pool and at spa.

PART 3: EXECUTION

3.01 EXAMINATION

A. Examine areas in which work is to be performed, Report in writing to Owner's Representative all prevailing conditions that will adversely affect satisfactory execution of work. Do not proceed with work until satisfactory conditions have been corrected.

B. Starting work constitutes acceptance of the existing conditions and this Contractor shall then, at his expense, be responsible for correcting all unsatisfactory and defective work encountered.

3.02 PREPARATION

Reviewed for Code Compliance
Inspections Division
Approved with Conditions
Date: 10/31/17

A. Perform earthwork and dewater excavation in compliance with Section 02300. Earthwork: Remove excess earth from site if required and as directed by Owner's Representative.

B. Trench for system as specified in Section 02300 - Earthwork and provide system as specified in Section 02500 -Utility Services.

3.03 INSTALLATION

A. Formwork and Reinforcement:
   1. Install formwork to lines and profiles shown. Brace forms for work to prevent movement during concrete placing operations.
      a. Allow other trades sufficient time for installation of equipment and materials which must be fastened to forms.
      b. Clean form surfaces prior to concrete placing operations.
   2. Place reinforcing steel as shown on drawings. Steel shall be free from dirt "rust" oil, paint and mill scale.
   3. Securely wire-tie steel at points where bars cross. Stagger splices and laps.
   4. Install gauging wires to establish thickness of finish work.
   5. After placing pool reinforcing, but before placing concrete, confirm that grounding circuits have been provided by the electrical contractor to steel reinforcement, grab rails and hand rails, as required by the National Electrical Code, Article 680. No concrete shall be placed, until this requirement has been complied with.

B. Concrete:
   1. Placing of "Gunite" and shotcrete: Conform to the requirements of GCA publication G-84 as specified herein.
   2. Gunite:
      a. Mixing: Mix dry in batch mixing machine for a period of not less than 1 minute.
      b. Mix and strength: as specified in Part 2
   3. Shotecrete
      a. Mixing time: Mixing for materials delivered by ready- mix trucks to job site, shall not exceed two hours or 250 revolutions of drum, whichever comes first. Additional water may be added at job site only if requested by contractor. When additional water rotate drum minimum of 30 additional revolutions.
   4. Placing Concrete
      a. Place concrete against original undisturbed soil, thoroughly compacted earth.
      b. Remove all loose, fine aggregate or rebound from surfaces receiving concrete before placing succeeding layers. Whenever possible, first layer shall entirely cover reinforcing steel to secure in proper position.

Reviewed for Code Compliance
Inspections Division
Approved with Conditions
Date: 10/31/17

c. Where new concrete is applied against existing concrete, thoroughly clean the existing surface and drenched with water at least twice on the day before placing new concrete. Surfaces upon which concrete will be applied shall be sufficiently, damp to prevent excessive absorption of water content in new concrete mix but no so wet as to overcome suction.

d. Concrete deposited on vertical surfaces shall be shot at right angle to surface starting at the bottom and continuing upward. Build up in layers of a thickness that will not slump, allowing sufficient time between placing of layers for initial set to take place.

5. Finishing:

a. When thickness and planes outlined by forms and gauging wires have been reached, rod surfaces to true lines. After rodding, remove gauging wires. Finish all exposed surfaces to straight and true lines.

b. Finish: Gun finish as left by nozzle.

6. Continuously moisture cure for no less than 7 days.

C. Equipment:

1. Flow meters: install in straight run of pipe having minimum length of 10 pipe diameters. Upstream and 4 pipe diameters downstream and in position that can be easily reached by operator.
2. Chemical Peed injection: Locate Injection points downstream from all filter room equipment.

D. Deck Drain System

1. Install deck drain system in strict accordance with manufactures recommendations and written instructions.
2. Grade sub soil, slopping it toward drain location. Drive 3-1/2" short stake into ground at 30" o/c two nailing strips per 10 ft. section. Attach nailing clips and place drain over the stakes. Use couplers to ensure a straight line. After aligning, nail firmly to stakes.
3. Insert adapter. Install Clean-out. Place concrete and trowel gradual (min 1/4"ft.) slope to drain. After concrete has set, install end plug.
4. Coordinate removal of protective tape with deck finish coating application.

E. Piping:

1. Cut all pip with mechanical cutter without damage to pipe.
2. Placing and Laying: Inspect pipe for defects before installation. Clean the interior of pipe thoroughly of foreign matter and keep clean during laying operation. Pipe shall not be laid in water or when trench conditions are unacceptable as determined by the Owner's Representative. Water shall be kept. out of the trench until the pipe is installed. When work is not in

Reviewed for Code Compliance
Inspections Division
Approved with Conditions
Date: 10/31/17

progress, open ends of pipe and fittings shall be securely closed so 1 no trench water, earth or other substance will enter the pipes or fittings.

3. Threaded Joints: After cutting and before threading the pipe shall be reamed and shall have buns removed. Screw joints shall be made with graphite or inert filter and oil or with an approved graphite compound applied to male threads only. Threads shall be full-cut and not more than 3 threads on pipe remain exposed. Use Teflon 11 tape on the male threads of
all threaded pipe joints. Caulking of threaded joints to stop or prevent leaks will not be permitted. Union shall be provided where required for disconnection of exposed piping. Unions will be permitted where access is provided.
4. Solvent welded joint shall be made in accordance with the manufacturer's printed instructions and the following minimum standards:
   a. Fittings shall fit easily on the pipe before applying cement. The outer surface area of pipe and inner wall of fitting shall be dry and clean. Thinner is to be applied to the outer surface of the pipe, and to the inner surface of the fitting. Cement is to be applied to the outer surface of the pipe or on the male section of fittings only. When the outside surface area of the pipe is satisfactorily covered with cement allow ten (10) seconds open time to elapse before inserting pipe end into fitting. After full insertion of pipe into fitting, turn fitting about the pipe end approximately 1/8 to 1/4 of a turn. Wipe off excess Cement at the joint in a neat cove bead.
   b. Joints shall remain undisturbed for a minimum of 10 minutes from time of jointing the pipe and fitting. If necessary to apply pressure to a newly made joint, limit y 10% of rated pipe pressure) during the first 24 hours after the joint has been made.
   c. Full working pressure shall not be applied until the joints have set for a period of 24 hours.
   d. Make provisions for expansion and contraction by way of swing joints or snaking,
   e. Protect plastic pipe from exposure to aromatic hydro-carbons, halogenated hydracarbons, and most of esters and ketones that attack the material.
   Protect all pipe from mechanical damage and long exposure to sunlight during storage,
5. Install piping without cross connections or inter-connection between distribution supply for drinking purposes and swimming pool that will permit backflow of water into potable water supply. Pipe openings shall

Reviewed for Code Compliance
Inspections Division
Approved with Conditions
Date: 10/31/17

be closed with caps or plugs during installation. Equipment and poc fittings shall be
tightly covered and protected against dirt, water and chemical or mechanical injury. At completion of work fittings, materials and equipment shall be thoroughly clean and adjustable for proper operation.

6. Fi1ter Face Piping: arrange to carry out operations of filtering backwashing and filter draining
7. Value Identification: Label all valves.
8. Testing and Flushing:
   a. Pressure Piping: After the pipe is laid, the joints completed, and the trench partially backfilled leaving joints exposed for examination, subject new lines to hydrostatci pressure of not less than 50 pounds per square inch.
      Joints shall remain water tight under this pressure for a period of two hours.
   b. Gravity Lines: A water test shall be applied to all gravity drain piping system either in their entirety or in sections. All openings shall be tightly plugged and each system filled with water and tested with at least a 10 foot head of water. Water shall be kept in the system, or in the portion under tests for at least 15 minutes before inspection starts. System shall be tight at all joints.
   c. Flushing: Pipelines leading to tile pool shall be thoroughly flushed clean with chlorinated water before the pool is filled and placed in use.

F. Plaster Finish:
   1. Finish concrete surfaces in pool with a wood float finish to a smooth consistent finish acceptable to Owner Representative.
   2. Fill uneven surfaces and depressions with cement plaster brown coat.
   3. Wash all pool surfaces thoroughly with dilute solution of muriatic acid and flush with fresh water to assure a clean surface free to loose materials, dust and foreign matter.
   4. Plaster installation:
      a. Do not apply plaster when rain is imminent or at room temperatures below 60 degrees F.
      b. Apply in two coats using the double-back method to obtain a total thickness of not less than 3/8" or more than ½”. Use tile as screed.
   5. Trowel to smooth dense, impervious surface free of stains and uniform white color consistency.
   6. Fill pool as plasterwork progresses.

G. Title Installation: Where shown on Drawings use setting materials and grout in accordance with section 09310.

Reviewed for Code Compliance
Inspections Division
Approved with Conditions
Date: 10/31/17

3.04 FIELD QUALITY CONTROL

A. For Gunite Shotcrete Work:

1. **Compressive strength test: Take 1 sample for pool floor construction and 1 sample for wall construction but no less than a minimum test for each 50 cu. yd. of concrete.**
2. Submit copy of test results to Owner's Representative.

B. Water Treatment:

1. Obtain a chemical analysis of the source/make-up water supply and submit to Owner's Representative. Include the following:
   a. Total Alkalinity/ppm
   b. Calcium Hardness/ppm
   c. Chlorine/ppm
   d. pH
   e. Iron
   f. Copper
2. Treat and balance pool water prior to turnover of pool to Owner's Operation Division.
3. Balance Water to Establish:

Total alkalinity:	80-100 ppm
Calcium hardness	20-275 ppm I
Total Available CHL (Pool):	1.5 ppm
Free Available CHL (Pool):	1.5 ppm
Total Available CHL (Spa):	3.0 ppm
Free Available (Spa);	3.0 ppm
pH:	7.4-7.6
Iron content:	0.0 ppm
Copper content:	0.0 ppm
Saturation Index:	-3 - +.3

4. Stabilization (outdoor pool) 40 ppm

4.0 GENERAL REQUIREMENTS OF RENOVATION

Prior to the submission of sub-bids, the subcontractor will thoroughly inspect the existing conditions. It is expected that there will be variations in actual conditions from what is assumed on the design plans. Only major deviations in existing conditions will be grounds for additional payments. It is also expected that the construction will be complete in those areas shown on the plan for renovation. Additional monies for additional materials or labor to complete the work will not be considered.

END OF SECTION

Reviewed for Code Compliance
Inspections Division
Approved with Conditions
Date: 10/31/17

SECTION 14240

HYDRAULIC ELEVATOR

1. GENERAL:

1.1 REFERENCES: Drawings and general provisions of Contract, including General Conditions and Division 1 specifications, apply to work in this section.

1.2 RELATED WORK SPECIFIED ELSEWHERE:

A. 110 volt branch circuit to the terminals of the elevator controller for car light supply and 110 volt light and outlet in the elevator pit, complete with switch adjacent to the pit ladder as shown on Elevator Drawings.

B. Any cutting, patching or painting of walls and grouting under thresh-holds and hoistway frames.

C. Adequate supports for guide rail brackets.

D. Sill support angles.

E. Electrical current during erection and testing of equipment.

F. Necessary recesses to accommodate doors, sills, (min. 2-1/2" deep) and signal equipment such as indicators, push buttons, hall lanterns, etc.

G. Pit access ladder.

H. General Contractor to receive, handle and store in the building approximately ten (10) tons of elevator materials.

I. Smoke sensors in each elevator lobby and elevator machine room complete with necessary wiring to elevator controller. A shunt trip circuit breaker with heat detectors will also be provided as required.

1.3 REGULATORY AGENCIES: Perform all work in accordance with the National Electrical Code, American Standard Safety Code and such state and local codes as may be applicable.

1.4 SUBMITTALS: Shop Drawings-

A. Submit six (6) blue print copies of elevator layout drawings to the Architect for approval.

Reviewed for Code Compliance
Inspections Division
Approved with Conditions
Date: 10/31/17

B. Upon completion submit to Owner, warrantee operating manual and maintenance information.

1.5 GUARANTEE:

A. Elevator Contractor shall guarantee that materials and workmanship of apparatus installed by him under these Specifications shall be first class in every respect; and that he will make good any defects not due to ordinary wear and tear or improper use which may develop within one (1) year from date of completion and installation.

B. In addition to the other requirements, inspection, tests and remedies herein provided upon completion of elevator installation and before final approval and final payment, Elevator Contractor shall make, in speed test with full maximum load on elevator to determine whether elevator equipment as installed meets the speed, capacity and all other requirements of the Specifications.

C. In event equipment does not meet all requirements of Specifications, Elevator Contractor shall promptly remove from the premises all work condemned by Architect as failing to conform to the contract and shall bear all expense of making good all work of other Contractors destroyed or damaged by such removal or replacement. If Elevator Contractor does not remedy such condemned work within a reasonable time, fixed by written notice from Architect, General Contractor may correct such condemned work at expense of Elevator Contractor and withhold such cost from final payment under contract price. In the event the remainder due under Contract price is insufficient to cover such a cost, Elevator Contractor shall, immediately upon request, reimburse General Contractor in full.

1.6 PERMITS, TAXES AND LICENSES: All permits, inspection fees and licenses necessary for the execution of the work shall be secured and paid for by the Elevator Contractor.

1.7 TEMPORARY USE: The General Contractor, Sub-contractors, Owner or others will not be permitted use of the elevators during construction except under a written agreement as stipulated by the Elevator Contractor.

2. PRODUCTS:

2.1 ACCEPTABLE MANUFACTURES:

A. Except as otherwise specified herein, or specifically approved by Architect, the Elevator Contractor shall be regularly engaged in installation of elevators of type specified herein, and shall be able to demonstrate at least three (3) installations of this type made by him within the State of New Hampshire which have provided satisfactory operation for a period of one (1) year prior to the date of receipt of General Bids, for this project.

Reviewed for Code Compliance
Inspections Division
Approved with Conditions
Date: 10/31/17

B. Demonstrate that he has provided satisfactory maintenance service for elevators of typ specified and that he has maintained a complete maintenance organization comprised of regularly employed inspectors and mechanics for a period of at least one (1) year prior to the date of receipt of General Bids.

C. Provide 1 year maintenance warrantee for insuring problem free operation of elevator, and make available complete ongoing maintenance service package.

D. Elevator shall be equal to Canton Elevator Company, Otis Elevator or Pine State, or approved equal. Elevator shall meet latest ANSI handicapped requirements and State Elevator Code.

E. Delivery of elevator systems shall be guaranteed by Manufacturer to be on site sixteen (16) weeks after receipt of approved Shop Drawings. Shop Drawings shall be submitted to the General Contractor for review by the Architect within ten (10) days of Sub-Contractors award.

2.2 MATERIALS AND FABRICATIONS:

A. Description of equipment -

Capacity:	3500 lbs. Hydraulic
Speed:	125 fpm
Operation:	Selective Collective
Inside Cab Dim	6'-8" x 4'-3" inside dim.
Travel:	Approximately (43'- 2-1/8") as shown on Drawings
Power supply:	208 v 3 phase, 60 cycle.
Machine Location:	As shown on Drawings
Stops & Openings:	Four (4) stops
Car Enclosure:	See Interior Design Drawings
	One (1) set Protection pads and hooks.
	Include: ADA compliant telephone Fan Emergency Lighting Proximity detectors, door protection

Reviewed for Code Compliance
Inspections Division
Approved with Conditions
Date: 10/31/17

Hoistway Door Frames:	Hollow metal U.L. "B: labeled door, square frame
Door Size & Type:	Single slide side open 3'-6" W x 7'-0"H (clear opening) finish to be baked enamel; color to be selected from standard selection charts
Door Operation:	D.C. Power Operation
Signals:	Illuminated halo buttons, (Braille) alarm bell, in car location. Hall position indicator at main floor level. In – Car Direction Lantern
Special Features:	Special handicap provisions Door Hold Key Service Independent Operation Key Switch
Motor HP:	3 Phase Power 40 HP Max
Starter	Solid state soft start

B. Jack unit:

1. The jack unit shall be designed and constructed in accordance with the applicable requirements of the American Standard Safety Code for Elevators A-17. It shall be of sufficient size to lift the gross load the height specified. It shall be factory tested to insure adequate strength and freedom for leakage. No brittle material, such as gray cast iron, shall be used in the jack construction.

2. The jack unit shall consist of the following parts: a plunger of heavy polished steel tubing accurately turned; a stop ring shall be electrically welded to the plunger to positively prevent plunger leaking its casing made of steel tubing and provided with a pipe connection and air bleeder; Brackets shall be welded to jack casing and supporting the elevator on pit channels.

3. A sealed PVC cylinder protection system shall be installed. The system shall provide a means to monitor the space between the PVC sleeve and cylinder wall and evacuate unwanted fluids, so as to prevent such fluids from remaining in contact with the cylinder.
4. A standard wellhole with steel pipe casing to retain the hole shall be provided**.** All drilling spoils are to be removed by the general contractor. Water for drilling, if required, will be provided by others also. Should obstructions such as rock,

Reviewed for Code Compliance
Inspections Division
Approved with Conditions
Date: 10/31/17

boulders, debris, water, quicksand or any other condition other than normal soil or clay be encountered, additional time to drill the hole will be treated as a change order. Work cease until a change order is issued.

C. Car:

1. Platform and Sling: The platform and sling have a fabricated frame of formed and structural steel shapes, gusseted and rigidly welded. Flooring shall be wood top floor laid over wood sub-floor. Finished flooring shall be provided, by others, on top of the car platform.

2. The sling shall consist of heavy steel channel stiles properly affixed to a steel cross head and bolster, with adequate bracing members, to remove all strain from the car enclosure.

3. Steel bumper plates shall be affixed to bottom of bolster channels; and a platen plate with clamps and car screws shall be furnished for fastening sling to plunger.

D. Car doors: The car entrance shall be provided with horizontal sliding doors. Panel rigidity to be obtained by suitable steel reinforcements. Doors shall be hung on sheave hangers with polyurethane tires and sheaves not less than 2-1/2" diameter running on a polished steel track, and guided at the bottom by non-metallic shoes sliding in a smooth threshold groove.

E. Alarm bell: An emergency alarm bell shall be located in conformance with ANSI A-17 Code requirements, and connected to a plainly marked push button in the car. Alarm bell shall be connected to the emergency lighting power pack.

F. Guide and Guide Shoes: Guides for the elevator car shall be planed steel elevator guide rails, properly fastened to the building structure with steel brackets. The car stile shall be fitted at top and bottom with sliding guide shoes.

G. Power Unit:

1. (Oil pumping and control mechanism) shall be compactly and neatly designed with all of the components listed below combined in a self-contained unit; structural steel outer base with tank supports; floating inner base for mounting motor pump assembly; over head oil reservoir with tank cover and controller compartment with cover; metal drip pan; oil-hydraulic pump; electric motor; and oil control unit with the following components built into a single housing: a high pressure relief valve, a check valve, an automatic unloading up start valve, a lowering and leveling valve, and a magnetic controller, or a self contained submersible of manufactures standard type.

Reviewed for Code Compliance
Inspections Division
Approved with Conditions
Date: 10/31/17

2. The pump shall be especially designed and manufactured for oil-hydraulic elevator service. It shall be of positive displacement screw type, inherently designed for steady discharge with minimum pulsations to give smooth and quiet operation. Output of pump shall not vary more than ten percent (10%) between no load and full load on elevator car.

3. Motor shall be especially designed for oil-hydraulic elevator service, of standard manufacturer and of duty rating to comply with herein specified speeds and loads.

4. Oil control unit shall consist of the following components, all built into a single housing. Welded manifolds with separate valves to accomplish each function will not be acceptable under this Specification. All adjustments shall be accessible and shall be made without removing the assembly from the oil lines:

   a. Relief valve shall be externally adjustable and shall be capable of bypassing the total oil flow without increasing back pressure more than ten percent (10%) above that required to barely open the valve.

   b. Up start and stop valve shall be externally adjustable, and designed to bypass oil flow during start and stop of motor pump assembly. Valve shall close slowly, gradually diverting oil to or from the jack unit, insuring smooth up starts and up stops.

   c. Check valve shall be designed to close quietly without permitting any perceptible reverse flow.

   d. Lowering valve and leveling valve shall be externally adjustable for drop-away speed, lowering speed, leveling speed and stopping speed to insure smooth "Down" starts and stops. The leveling valve shall be designed to level the car to the floor in the direction the car is traveling when slow down is initiated.

5. Electric controller shall be of the full magnetic type or solid-state integrated circuitry. Silver to silver contacts shall be utilized on all relays and contractors. Thermal overload relays to be provided to protect the motor. All component switches to be mounted in a steel panel designed for wall to floor mounting. Shall have built in diagnostics, no proprietary tools required to service unit.

H. Mainline Strainer: A mainline strainer of the self-cleaning type, equipped with a 40-mesh element shall be furnished and installed in the oil line.

I. Failure Protection: The electrical control circuit shall be designed so that if a malfunction should occur, due to motor starter failure, oil becoming low in the system, or the car failing to reach a landing in the up direction within a predetermined time, the elevator car will automatically descend to the lowest terminal landing. If power operated doors are used, the doors will automatically open when the car reaches the

Reviewed for Code Compliance
Inspections Division
Approved with Conditions
Date: 10/31/17

landing to allow passengers to depart. The doors will then automatically close and all control buttons, except the "door open" button in the car station, shall be made inoperative.

J. Sound Isolating Coupling: Install a minimum of two in the oil line in the machine room between pump and jack.

K. Oil-Hydraulic Silencer (muffler device): Install in oil line near power unit. It shall contain pulsation-absorbing material inserted in a blowout-proof housing arranged for inspecting interior parts without removing unit from oil line. Rubber hose without blowout-proof features will not be acceptable.

L. Vibration Pads: Mount under the power unit assembly to isolate the unit from the building structure.

M. Automatic Terminal Limits: Place electric limit switches in the hatchway near the terminal landing; designed to cut off the electric current and stop the car should it run beyond either terminal landing.

N. Automatic Self-leveling: Provide elevator with a self-leveling feature that will automatically bring the car to the floor landings. This self-leveling shall, within its zone, be entirely automatic and independent of the operating device, and shall correct for over travel or under travel. The car shall also be maintained approximately level with the landing regardless of the load.

O. Buffers: Furnish and install substantial buffers under the car in the elevator pit. They shall be mounted on continuous channels fastened to the elevator guide rail or securely anchored to the pit floor and substantial extensions will be provided, if required. Buffers shall comply with ANSI A-17.1 Code requirements.

P. Car Top Inspection Station: A car top inspection station with an "emergency stop" switch and with constant pressure "up-down" direction buttons shall make the normal operating devices inoperative and give the inspector complete control of the elevator.

Q. Door Operation: Furnish and install a direct current motor driven heavy-duty operator designed to operate the car and hoistway doors simultaneously. Door movements shall be electrically cushioned at both limits of travel and door-operating mechanism shall be arranged for manual operation in event of power failure. The leading edge of the car door shall be provided with a retractable reversal edge arranged to automatically return car and hoistway doors to the open position in the event the doors are obstructed during closing cycle. Doors will then resume closing cycle.

Doors shall automatically open as the car arrives at the landing and shall automatically close after an adjustable time interval or when the car is dispatched to another landing.

Reviewed for Code Compliance
Inspections Division
Approved with Conditions
Date: 10/31/17

Direct drive geared operators, A.C. controlled units with oil checks, or other deviatio for the above are not acceptable.

R. Interlock: Equip each hoistway entrance with an approved type interlock tested as required by Code. The interlock shall be designed to prevent operation of the car away from the landing until the doors are locked in the closed position as defined by Code and shall prevent opening the doors at any landing from the corridor side unless the car is at rest at the landing or is in the leveling zone and stopping at the landing. Interlocks shall bear Underwriter's Laboratories "B" label of approval.

S. Hoistway Door Unlocking Device: Provide hoistway door unlocking devices as specified by the ANSI A-17.1 Code to permit authorized persons to gain access to hoistway when elevator car is away from the landing.

T. Door Hangers and Tracks: For each hoistway sliding door, furnish and install sheave type two point suspension hangers and tracks complete. Sheaves shall be 2-1/2" in diameter and have polyurethane tires with ball bearings properly sealed to retain grease. Hangers shall be provided with an adjustable slide to take the up-thrust of the doors. Tracks are to be drawn steel shapes, smooth surface and shaped to conform to the hanger sleeves.

U. Hoistway Entrances: Hoistway entrances of the hollow metal, horizontal sliding type shall be furnished and installed complete at each of the hoistway openings. Note that entrances must be at least minimum legal width for wheelchair use, meeting ANSI A-17.1.

1. Entrances shall be manufacturer's standard design and shall bear Underwriter's Laboratories "B" labels. They shall consist of frames, sills, doors, hangers, hanger supports, hanger covers, fascia plates, and all necessary hardware. Finish to be baked on prime enamel for finish painting in the field by others.

2. The entire front wall of the hoistway is to be left open or a rough opening provided which is 12" greater in width and 6" greater in height than the finished opening, until after entrances are installed. After guide rails are set and lined, the entrance frames shall be installed in perfect alignment with the guide rails. Finish walls will then be completed by others.

V. ADA telephone shall be furnished with wiring from elevator cab to the machine room and telephone box. Wiring to be coordinated with Electrical Contractor and tied into outside phone system.

W. Operation (Selective Collective Automatic Push-button): Control of the elevator car shall be automatic in operation by means of a push-button in the car marked for each of the landing levels served and an "up-down" button at each intermediate landing with a call button at each terminal landing, wherein all stops registered by the momentary

Reviewed for Code Compliance
Inspections Division
Approved with Conditions
Date: 10/31/17

pressure of landing or car buttons shall be maintained until the car answers the call. A emergency stop switch shall be provided in the car push-button station which, when in the off position, will render the elevator inoperative, and which will enable attendant or passenger to stop the car at any point during its travel. Opening of this switch shall not cancel registered calls, and when the switch is closed the car will continue to answer calls that have been registered. Each landing station shall contain an illuminated push-button which shall "light-up" when pressed to indicate that a call has been registered to bring the car to that particular landing. A time delay non-interference feature shall be incorporated in the control mechanism to allow simple time for opening and closing car and hoistway doors before it is again placed in motion.

X. Special Emergency Service:

1. Special Emergency Service Operation shall be provided in compliance with the latest revision of the ASME/ANSI A17.1 or CAN3-B44 Code.

2. Special Emergency Service Phase I to return the elevator non-stop to a designated floor shall be initiated by an elevator smoke detector system or a keyswitch provided in a lobby fixture.

3. The smoke detector system is to be furnished by others. The elevator contractor shall provide contacts on the elevator controller to receive signals from the smoke detector system.

4. A keyswitch in the car shall be provided for in-car control of each elevator when on Phase II of Special Emergency Service.

5. If an elevator is on independent service when the elevator is recalled on Phase I operation, a buzzer shall sound in the car and a message indicator will be activated.

END OF SECTION

Reviewed for Code Compliance
Inspections Division
Approved with Conditions
Date: 10/31/17

SECTION 14560

LAUNDRY AND LINEN CHUTES

PART 1 GENERAL

1.01 SUMMARY

A. Section Includes:

1. Linen (laundry) Chutes

1.02 REFERENCE STANDARDS

A. NFPA Code: Comply with applicable portions of National Fire Protection Association (NFPA) No. 82.

1.03 SUBMITTALS

1. Product Data: Submit manufacturer's product specifications, standard details, installation instructions and general recommendations for total pre-engineered chute system. Mark-up data sheets to indicate actual selections for sizes and other details of installation.

2. Shop Drawings: Submit 1/4" scale section/elevation drawing, 1/2" scale typical landing plans, and 1-1/2" scale details of chute fabrication. Distinguish between factory fabrication and field assembly work. Show required piping, wiring connections and conduit runs for wiring.

3. Quality Control Submittals:

a. Test Reports: Fire rating, in duplicate.

1.04 QUALITY ASSURANCE

A. Reference Standards: Applicable requirements of standards and specifications referenced herein apply to the Work of this Section.

B. Chute and Accessories: Conform to NEPA, UL and Local Code requirements.

C. Sprinklers: Comply with requirements of NFPA 13, Section 4-4.9 and NFPA 82, Section 4-4.1.

1.05 DELIVERY, STORAGE AND HANDLING

A. Deliver materials to job site in unopened containers bearing manufacturer's name and content identification.

B. Store materials as recommended by the manufacturer.

1.06 PROJECT CONDITIONS

A. Coordination: Coordinate this Work with the Work of other Sections to avoid any delay or interference with other Work.

PART 2 PRODUCTS

2.01 MANUFACTURERS

A. Approved Manufacturers:

1. Wilkinson-Hi-Rise, LLC. - (800-686-6726)

Reviewed for Code Compliance
Inspections Division
Approved with Conditions
Date: 10/31/17

2. Midland Metalcraft Co (847-678-4007)
3. US Chutes Corp. (800-872-4883)
4. Chutes International (800-882-4883)

2.02 LINEN CHUTE

A. Chute Sections: 16 gage aluminized steel per NFPA 82, 24" diameter.

1. Factory assemble sections to greatest extent possible. Disassemble only as necessary for shipping and handling limitations. Clearly mark for reassembly and coordinated installation.
2. Design sections to flash inside sections below, with no bolts, clips or other projections inside chute to snag flow of materials.
3. Except for joints required for shipment and installation, provide factory welded or lock-seamed tight joints.
4. Provide expansion joint in chute between supporting grid floor frames.

B. Vent: Extend full diameter chute section through roof; [terminate top 4'-0" above roof]. Equip 16 gage aluminized steel vent cap with ventilation air space around full diameter of vent riser, insect screen, condensation gutter, roof flashing. [Provide roof curb at low slope roofs, installed by roofing contractor.]

C. Door Units:

1. UL Labeled Door Units: Provide UL 1-1/2 hour labeled door units with 30-minute temperature rise of 250 deg. F., (139 deg. C.), complete with closers.
2. Chute Intake Door/Frame Units: Provide self-closing units at each landing and at heights above floor as indicated. Use manufacturer’s recommended heights if not otherwise shown. Provide 21 inch x 18 inch door size. Equip doors with positive latch, latch handle, and manufacturer's standard keyed cylinder locks. Provide manufacturer's standard stainless steel door units, AISI Type 302/304 with standard satin finish or No. 3 directional polish.
   a. Factory Bolt Doors to Intake Throat.
3. Discharge Hopper: Horizontal rolling, UL 1-1/2 hour labeled, spring counterbalanced with fusible link. Provided with required offsets and reinforcing, structural angle door around discharged opening, 2" IPS drain at low point of hopper, pipe pedestal support, 28" wide x 36" high x 14 gage stainless steel hopper door, manufacturer's standard self-latching devices.
4. Accessories:
   a. Flushing Spray Head: 3/4" IPS; installed above top intake door.
   b. Sprinkler Heads: 1/2 IPS; located at or above top service opening of chute, at alternate floor levels in buildings over two stories in height, and at lowest service area, unless otherwise required by local code.
      1) Recess heads out of chute area through which linen travels, with recessed area designed to avoid collection of foreign matter.

Reviewed for Code Compliance
Inspections Division
Approved with Conditions
Date: 10/31/17

5. Electrical Interlocks: Equip the intake door units with electrical interlocks. All doors a normally unlocked. When system is energized by opening one door, the remain doors shall be automatically locked until system is de-energized. Provide manual control switch stations where indicated.

PART 3 EXECUTION

3.01 EXAMINATION

A. Examine areas in which Work is to be performed. Report in writing, to Owner's Representative, all prevailing conditions that will adversely affect satisfactory execution of Work. Do not proceed with work until unsatisfactory conditions have been corrected.

B. Starting Work constitutes acceptance of the existing conditions and this Contractor shall then, at their expense, be responsible for correcting all unsatisfactory and defective Work encountered.

3.02 INSTALLATION

A. General: Comply with chute manufacturer's instructions and recommendations. Assemble components with tight, non-leaking joints and anchor securely to supporting structure with sufficient anchorages to withstand impact and wind loading stresses on vent units. Provide for thermal expansion movement of chute sections. Except as otherwise indicated, install chutes plumb, without offsets of obstructions, for free fall of materials within chutes. Install chute systems complete with doors, and with safety and fire-resistive components and accessories.

B. Intake and Discharge Doors: Install doors at heights and locations indicated. Provide anchorages, wall/chute interfaces, self-closing operation, self-latching and similar features of installation to comply with labeling and fire-resistive requirements for fire-resistive door construction. Interface door units with throat sections of chutes in a manner which will ensure safe, snag-proof, sanitary depositing of materials in chutes by users.

1. Coordinate foot-pedal door operator installation with door and enclosure wall installation.

3.03 TESTING, ADJUSTING, CLEANING

A. Test operate components of chute system upon completion of installation; demonstrate use and safety features to Owner's personnel. Operate doors, locks and interlock system to demonstrate that hardware is adjusted and electrical wiring is connected correctly. Where possible, complete test operations prior to installation of shaft enclosures.

B. Cleaning: Following completion of enclosure walls and ceilings, clean exposed surfaces of finished metal components of chute system. Remove foreign substances and repair imperfections in finishes, but do not remove UL labels.

3.04 DEMONSTRATION

A. Arrange demonstration of system operation, conducted by manufacturer's representative, to Owner's maintenance personnel

END OF SECTION

Reviewed for Code Compliance
Inspections Division
Approved with Conditions
Date: 10/31/17

SECTION 211313

AUTOMATIC FIRE PROTECTION

PART 1 GENERAL

1.1 DESCRIPTION OF WORK

A. The work covered by this Section of the specifications includes the furnishing of labor, materials, equipment, transportation, permits, inspections and incidentals and the performing of operations required to design, install and test a pressurized, fully supervised, wet or dry pipe fire protection system for full building protection in accordance with NFPA, IBC, and the Owner's insurance underwriter. Areas subject to freezing (such as exterior overhangs) shall have a dry pipe system, dry pendent or sidewall heads, or glycol-and-water loop per NFPA. Provide standpipes in each stairwell with a valve and hose connection at each floor if required by the Biddeford Fire Department. Provide floor control valves if required by the Biddeford Fire Department. Coordinate the exact locations with the Architect and Portland Fire Department.

B. The building sprinkler system design shall be based on NFPA13 requirements and per the City of Portland Fire Department.

1.2 RELATED DOCUMENTS

A. The drawings and the specifications including Section 23 05 00 "Supplemental Mechanical General Requirements" are hereby made a part of the work of this section.

B. Drawings and general provisions of Contract including General and Supplementary Conditions and all Division 1 specification sections.

1.3 QUALIFICATIONS

A. The Fire Protection Work shall be performed by a qualified Contractor primarily engaged in the design and installation of Fire Protection Systems. The fire protection system design shall be performed under the direction of, and sealed by, a professional engineer registered in the State of Maine or with NICET Level III (minimum) Certification.

B. Welding qualifications of individuals installing welded piping shall be certified by the National Certified Welding Bureau for the type(s) of weld(s) proposed for use in piping assembly.

1.4 SUBMITTALS

A. Items for which the submittal requirements of section 23 05 00, Supplemental Mechanical General Requirements, apply are as Follows:

1. Hydrant flow test.
2. System components.

Reviewed for Code Compliance
Inspections Division
Approved with Conditions
Date: 10/31/17

3. Hydraulic calculations.
4. Piping layout, details and control diagram.
5. Flushing and testing records.
6. Certificate of installation.
7. Copy of Fire Protection Contractors License.
8. Welding certificates of individual welding technicians.
9. Sprinkler heads.
10. Alarm valve(s).
11. Fire department connection(s).
12. Firestopping materials and methods.

Submit hydrant flow test, equipment descriptive data, hydraulic calculations and system layout for review by the Owner's Insurance Underwriter. Submit the system layout to the Architect for review. The Architect's review will be limited to checking for conformance with the design concept of the project and general compliance with the contract documents and will in no way assume liability for review for compliance with codes, standards and laws.

B. Section 01330 - Submittal Procedures: Submittal procedures.

C. Product Data: Submit data on product characteristics, performance criteria and limitations.

D. Manufacturer's Installation Instructions: Submit procedure for preparation and installation.

E. Manufacturer's Certificate: Certify products meet or exceed specified requirements.

1.5 SPRINKLER COVERAGE

A. Sprinkler head coverage shall conform with NFPA 13 requirements for the use of the building. Coverage shall be increased accordingly where required by the Authority having jurisdiction.

B. If the requirements of the inspection agency or the Owner's insuring agent are more rigorous than those stated herein, then the more rigorous requirements shall govern.

PART 2 PRODUCTS

2.1 SYSTEM COMPONENTS AND HARDWARE

A. Pipe, Fittings, Joints, Hangers, Valves, Fire Department Connections, Alarms: Conform to NFPA 13, Installation of Sprinkler Systems.

B. Sprinkler Heads:

1. Interior Heated Spaces: Conform to NFPA 13, commercial quick response type. Sprinkler heads in acoustical tile or GWB ceilings shall be “semi-recessed” type with recessed escutcheon to match the ceiling finish. Dry pendent or sidewall heads, where allowed by the Architect, may be standard response type.

Reviewed for Code Compliance
Inspections Division
Approved with Conditions
Date: 10/31/17

2. Provide a spare head cabinet with wrenches, the amount of spare heads for each orifice size, finish, temperature classification, pattern and length furnished in the project shall be in accordance with the following schedule:

Reviewed for Code Compliance
Inspections Division
Approved with Conditions
Date: 10/31/17

Sprinkler Heads on Project	Number of Spare heads of each type.
Less than 300	6
300-999	12
1000 or more	24

3. Provide head protection guards where required.

4. Sprinkler heads in unheated areas shall be dry pendent or sidewall type, or served by a glycol and water loop or separate dry-pipe system.

C. Fire Department Connection: Provide a 4" Storz connection (as verified with the local fire department) at a location coordinated with the local fire department and the Architect.

2.2 WATER SUPPLIES

A. The sprinkler water service shall be cement-lined ductile iron and conform to the requirements of NFPA 13, Installation of Sprinkler Systems.

2.3 DEVICES

A. Detection devices and associated wiring both within the fire protection system and to the building Fire Alarm System shall be the responsibility of the Sprinkler Contractor.

2.4 BACKFLOW PREVENTER

A. Provide AMES MODEL 2000.

2.5 PIPING SYSTEM IDENTIFICATION

A. Piping system and valve identification and color coding shall be in accordance with ANSI.

PART 3 EXECUTION

3.1 PIPING LAYOUT AND DESIGN

A. System requirements, installation requirements, design, plans, and calculations: Conform to NFPA 13, Installation of Sprinkler Systems.

B. Sprinkler piping shall be run concealed above ceilings / soffits in occupied areas. Piping in other areas may be run exposed. Piping shall not be exposed in occupied spaces unless indicated on the drawings.

C. Pipe penetrations through walls and floors shall be in accordance with Section 23 05 00 - Supplemental Mechanical General Requirements. Traverse points of piping shall be escutcheoned with split chrome floor and ceiling plates and spring anchors, where visible to occupancy. Penetrations through walls shall be sleeved in accordance with Section 23 05 00. Sleeves shall be provided by the Fire Protection Contractor.

Reviewed for Code Compliance
Inspections Division
Approved with Conditions
Date: 10/31/17

D. Coordinate design and layout with building structure and building systems. The work shown in the contract documents has precedence for space requirements. Work of other trades may be modified or moved only with permission of the trade involved. Costs associated with modifications or relocations shall be the same as for "Substitutions" Section 23 05 00.

E. The Architect shall review proposed system layout and reserve the right to relocate heads, revise sprinkler head type and location and in general review the final layout for components visible in occupied spaces.

3.2 SYSTEM ACCEPTANCE

A. Approval, flushing, hydrostatic testing, instructions, and certificates of installation: Conform to NFPA 13, Installation of Sprinkler Systems.

B. Disinfect the water piping in accordance with AWWA C601. Fill the piping systems with solution containing a minimum of 50 parts per million of available chlorine and allow solution to stand for minimum of 24 hours. Repeat disinfection if chlorine residual is less than 10 parts per million after 24 hours. Flush the solution from the systems with clean water until maximum residual chlorine contents is not greater than 0.2 parts per million.

C. Closing in Work:

1. General: Cover up or enclose work after it has been properly and completely reviewed.

2. No additional cost to the Owner will be allowed for uncovering and recovering, work that is covered or enclosed prior to required review and acceptance.

D. Cleanup and Corrosion Prevention:

1. Upon completion of the work thoroughly clean and flush piping systems to the sewer with water.

2. Piping and equipment shall be thoroughly cleaned. Dirt, dust, and debris shall be removed and the premises left in a clean and neat condition.

3. Before uncovered piping is permitted to be concealed, corrosion and rust shall be wire brushed and cleaned and in the case of iron products, a coat of approved protective paint applied to these surfaces. When corrosion is from the effects of hot solder paste, the areas shall be cleaned and polished and a wash of bicarbonate of soda and water used to neutralize the acid condition.

E. Instructions: On completion of the project, provide a technician familiar with the system to thoroughly instruct the Owner's representative in the care and operation of the system. The total period of instruction shall not exceed four (4) hours. The time of instruction shall be arranged with the Owner.

Reviewed for Code Compliance
Inspections Division
Approved with Conditions
Date: 10/31/17

F. Warranty: For a period of one (1) year after completion of the installation repair or repla any defective materials or workmanship. Upon completion of the installation, the system shall be turned over to the Owner fully inspected and tested, and in operational condition.

Reviewed for Code Compliance
Inspections Division
Approved with Conditions
Date: 10/31/17

3.3 FIRESTOPPING

A. Firestopping shall be performed in accordance with Specification Section 07841 “Firestopping”. All penetrations of fire-rated assemblies including walls and floors by mechanical system components (piping, ductwork, conduits, etc.) shall be firestopped as specified.

* END OF SECTION *

Reviewed for Code Compliance
Inspections Division
Approved with Conditions
Date: 10/31/17

SECTION 220000

PLUMBING

PART 1 GENERAL

1.1 RELATED DOCUMENTS

A. The drawings and the specifications including Section 23 05 00 “Supplemental General Mechanical Conditions” are hereby made a part of the work of this section.

B. Drawings and general provisions of the Contract including General and Supplementary Conditions and all Division 1 specification sections.

C. Uniform Federal Accessibility Standards (UFAS).

D. Americans with Disabilities Act (ADA).

1.2 DESCRIPTION

A. The work covered by this Section of the specifications includes the furnishing of labor, materials, equipment, transportation, permits, inspections, and incidentals and the performing of operations required to provide a complete and functional plumbing system.

B. Work shall be in accordance with the current edition of the Maine State Plumbing Code and applicable local ordinances.

1.3 SUBMITTALS

A. Substitutions: Your attention is directed to Section 23 05 00-"Substitutions", relative to competition and the (ONLY) notation. Familiarity with this section shall be achieved before reading the PRODUCTS section of this specification.

B. The items for which the submittals paragraph in Section 23 05 00, Supplemental General Mechanical Requirements, apply are as follows:

1. Piping materials.
2. Valves.
3. Pipe hangers.
4. Fixtures and trim.
5. Miscellaneous equipment.
6. Water heating equipment.
7. Piping, valves and equipment identification.
8. Firestopping.
9. Thermostatic mixing valves.
10. Trap primers.
11. Elevator Sump Pumps.
12. Rainwater filters.

Reviewed for Code Compliance
Inspections Division
Approved with Conditions
Date: 10/31/17

C. Section 01330 - Submittal Procedures: Submittal procedures.

D. Product Data: Submit data on product characteristics, performance criteria and limitations.

E. Manufacturer's Installation Instructions: Submit procedure for preparation and installation.

F. Manufacturer's Certificate: Certify products meet or exceed specified requirements.

PART 2 PRODUCTS

2.1 PIPING MATERIALS

A. Soil and Waste (Sanitary), Roof Drain and Vent Piping:

1. Below Grade: Cast iron with push-on joints or Schedule 40 PVC with solvent welded joints and fittings.

2. Above Grade: Schedule 40 PVC with solvent welded joints and fittings.

3. Condensate piping shall be Schedule 40 PVC or CPVC.

B. Domestic Water Piping:

1. Type L hard copper tubing and cast bronze or wrot copper solder fittings.

2. "Flowguard Gold" Schedule 40 solvent-welded CPVC pipe and fittings. CPVC pipe and fittings shall be rated at 100 psig at 180^0F and shall meet or exceed the requirements of ASTM D2846, the IBC, and be certified by the ANSI/NSF for potable water applications. Installation, including supports, shall be per the manufacturer’s recommendations.

3. Uponor AquaPEX, NSF rated, 180°F at 100psi, red (HW), blue (CW) and white (RHW), ProPEX expansion fittings.

C. Exposed Water and Waste Piping at Fixtures: I.P.S. copper with cast brass fittings chrome plated finish, with deep one piece escutcheon plates at traverse points.

D. Solder: Lead-free (ONLY), Englehard Silvabrite 100, 440^oF melting point, ASTM B32.

E. Underground Cold Water Piping (Building Entrance): Cement-lined ductile iron, coordinate with Portland Water District and Civil drawings/specifications.

F. Sprinkler Service Entrance Piping (to 10 ft outside of building and below slab): Cement-lined ductile iron, coordinate with Section 211313 - Automatic Fire Protection, Portland Water District and Civil drawings/specifications.

Reviewed for Code Compliance
Inspections Division
Approved with Conditions
Date: 10/31/17

2.2 GAS PIPING SYSTEM

A. Gas Piping: Schedule 40 carbon steel pipe conforming to ASTM 120 or A53, with threaded joints and malleable iron fittings (Above grade).

B. Ball Valves for Gas Service: Copper alloy with chromium plated floating ball per Federal Specification WW-V-35B, Type II, Class 3. Blowout-proof stem, reinforced teflon seats, threaded ends, quarter turn on-off, 600 WOG rating, 250 psi rating for natural gas, UL-listed as a natural gas shutoff valve, Apollo Model 80-100 series.

C. Provide gas pressure regulators at each appliance. Regulators shall be Maxitrol or Pietro-Fiorentini, with vent limiting devices or piped to atmosphere.

2.3 NO HUB COUPLINGS

A. For DWV piping, couplings shall be Clamp-All HI-TORQ125, shall maintain 15 PSI hydrostatic seal, constructed 304SS housing and ASTM C-564 neoprene gasket. Couplings shall meet FM 1680, IBC and local codes and requirements.

2.4 VALVES

A. Ball Valves: Copper alloy with stationary seat ring and chromium plated or stainless steel floating ball per Federal Specification WW-V-35B. Blowout proof stem, reinforced PTFE seal. Sizes 2" and larger shall have threaded ends. Provide lever handle with stem extension as required to allow operation without interfering with pipe insulation.

B. Check Valves: Horizontal Swing, MSS SP-80, Type 3, Class 125.

C. Drain Valves: Provide ball valves with 3/4" hose connection and brass cap.

D. Fixture Service Stop Valves: Angle Wheel Handle Stop, ASME A112.18M.

1. Each plumbing fixture shall have individual stop valves in the hot and cold supplies.

2. Service stop valves exposed in finished areas shall be chrome-plated brass; in non-finished areas, ball valves shall be used in lieu of chromed supplies.

E. Temperature and Pressure Relief Valves: Bronze body, tested under ANSI Z21.22, AGA and ASME rated, 125 psig/210°F relief settings.

2.5 PIPE HANGERS

A. Adjustable Swivel Hangers:

1. Pipe sizes 2" and less: Carpenter and Paterson Fig. 800, oversize for insulated piping systems.

2. Pipe sizes larger than 2": Carpenter and Paterson Fig. 100, oversize for insulated piping systems.

Reviewed for Code Compliance
Inspections Division
Approved with Conditions
Date: 10/31/17

B. Riser Clamp: Carpenter and Paterson Fig. 126 CT copper plated for copper piping, Fig. 126 for iron and PVC piping.

A. Insulation Shields: 18 ga. galvanized steel, 180° wrap, Carpenter and Paterson Fig. 265P, Type H.

2.6 FIXTURES AND TRIM

A. (P-1) Water Closet: Floor-mounted, tank-type, Sterling 402076 Stinson or approved equal, elongated bowl, white vitreous china, low consumption (1.28 gpf), color matched trip lever located on the wide side of the stall.

1. Seat: Kohler K-4774 Brevia Q2 Advantage, solid plastic, closed front with cover, quick-attach/release hinge, for elongated bowl, white color.

B. (P-1A) Water Closet, ADA Compliant: Floor-mounted, tank-type, Sterling 402076 Stinson or approved equal, elongated bowl, white vitreous china, low consumption (1.28 gpf), color matched trip lever located on the wide side of the stall.

1. Seat: Kohler K-4774 Brevia Q2 Advantage, solid plastic, closed front with cover, quick-attach/release hinge, for elongated bowl, white color.

2. The total installed height of the front edge of the seat shall 17” to 19” above the finished floor and shall comply with ADA guidelines.

C. (P-1B) Water Closet, ADA Compliant: Floor mounted, flush valve type, Kohler K-4405 Highline or approved equal, elongated bowl, white vitreous china, low consumption (1.28 gpf), 1-1/2” top spud.

1. Seat: Kohler K-4670-SC Lustra, solid plastic, open front without cover, self-sustaining hinge with stainless steel bolts, for elongated bowl, white color.

2. Flush Valve: Kohler K-13517 manual flush valve, piston style activation, 1.28 gpf, 1-1/2” spud coupling.

3. The total installed height of the front edge of the seat shall 17” to 19” above the finished floor and shall comply with ADA guidelines.

D. (P-2) Countertop Lavatory: Sterling 442040 Wescott or approved equal, 17”x13” oval, undermount with overflow, white vitreous china.

1. Faucet: Kohler K-T196 Falling Water, wall mount, single handle, 1.5 GPM flow aerator, polished chrome finish, with single handle ceramic disc valve K-307-K.

2. Drain: Kohler K-7124-A-CP, pop-up clicker, sink drain assembly with bright metal finish.

3. Trap: 1-1/4" PVC P-trap with cleanout plug. Adjustable with connected elbow and nipple to wall.

Reviewed for Code Compliance
Inspections Division
Approved with Conditions
Date: 10/31/17

E. (P-2A) Countertop Lavatory, ADA-compliant: Sterling 442040 Wescott or approved equal, 17”x13” oval, undermount with overflow, white vitreous china.

1. Faucet: Kohler K-T196 Falling Water, wall mount, single handle, 1.5 GPM flow aerator, polished chrome finish, with single handle ceramic disc valve K-307-K.

2. Drain: Kohler K-7124-A-CP, pop-up clicker, sink drain assembly with bright metal finish.

3. Trap: 1-1/4" PVC P-trap with cleanout plug. Adjustable with connected elbow and nipple to wall.

4. Lavatory shall be installed at 34" above finished floor (See Architectural drawings). Final installation of lavatory and accessories shall meet ADA guidelines and ANSI A117.1. Insulate exposed traps and supplies with Truebro Lavguard.

F. (P-2B) Wall Hung Lavatory, ADA-compliant: Sterling 442031 Worthington or approved equal, 20”x21”, white vitreous china, concealed overflow and punching for concealed arm carrier.

1. Faucet: Kohler K-16027-4 July, single handle, 1.5 GPM flow aerator, polished chrome finish, ceramic control cartridge.

2. Drain: Perforated flat grid strainer.

3. Trap: 1¼" PVC P-trap with cleanout plug. Adjustable with connected elbow and nipple to wall.

4. Carrier: Zurn or JR Smith concealed arm carrier.

5. Lavatory shall be installed at 34" above finished floor (See Architectural drawings). Final installation of lavatory and accessories shall meet ADA guidelines and ANSI A117.1. Insulate exposed traps and supplies with Truebro Lavguard.

G. (P-2C) Countertop Lavatory, ADA-compliant: Sterling 442040 Wescott or approved equal, 17”x13” oval, undermount with overflow, white vitreous china.

1. Faucet: Kohler K-16027-4 July, single handle, 1.5 GPM flow aerator, polished chrome finish, ceramic control cartridge.

2. Drain: Perforated flat grid strainer.

3. Trap: 1¼" PVC P-trap with cleanout plug. Adjustable with connected elbow and nipple to wall.

4. Carrier: Zurn or JR Smith concealed arm carrier.

Reviewed for Code Compliance
Inspections Division
Approved with Conditions
Date: 10/31/17

5. Lavatory shall be installed at 34" above finished floor (See Architectural drawings). Final installation of lavatory and accessories shall meet ADA guidelines and ANSI A117.1. Insulate exposed traps and supplies with Truebro Lavguard.

H. (P-3) Stall Shower: Sterling 72171100 Ensemble or approved equal, compression molded 60”x30” shower base. Provide with Sterling 72170110 Ensemble or approved equal, wall surround.

1. Shower Unit: Kohler K-P15611-4N Coralais, pressure-balancing mixing valve package. Provide with Kohler K-304-KS valve, single handle valve trim and K-72418 Awaken G90 fixed shower head, 2.0gpm. Provide integral checks and screwdriver service check-stops.

I. (P-3A) Tub / Shower, ADA Compliant: Kohler K-715 Villager or approved equal, enameled cast iron 60”x30” bath. ADA/ANSI grab bars by Architect.

1. Shower Unit: Kohler K-P15601-4N Coralais, pressure-balancing mixing valve package. Provide with Kohler K-304-KS valve, single handle valve trim with tub spout and K-72418 Awaken G90 fixed shower head, 2.0gpm. Provide with Kohler K-728-K diverter, K-T10182 diverter trim, K-98361 Awaken G90 handheld head with 24” slidebar and K-98350 hose connection. Provide integral checks and screwdriver service check-stops.

2. Where applicable the installation of and accessories shall meet ADA guidelines and ANSI A117.1.

J. (P-3B) Tub / Shower: Kohler K-715 Villager or approved equal, enameled cast iron 60”x30” bath.

1. Shower Unit: Kohler K-P15601-4N Coralais, pressure-balancing mixing valve package. Provide with Kohler K-304-KS valve, single handle valve trim with tub spout and K-72418 Awaken G90 fixed shower head, 2.0gpm. Provide integral checks and screwdriver service check-stops.

K. (P-3C) Roll-in Shower, ADA Compliant: Sterling 62070115 or approved equal, modular 63”x40” roll-in shower. Provide with L-shaped stainless steel ADA/ANSI grab bars and plastic fold-up seat.

1. Shower Unit: Kohler K-P15611-4N Coralais, pressure-balancing mixing valve package. Provide with Kohler K-304-KS valve, single handle valve trim and K-72418 Awaken G90 fixed shower head, 2.0gpm. Provide with Kohler K-728-K diverter, K-T10182 diverter trim, K-98361 Awaken G90 handheld head with 24” slidebar and K-98350 hose connection. Provide integral checks and screwdriver service check-stops.

2. Where applicable the installation of and accessories shall meet ADA guidelines and ANSI A117.1.

Reviewed for Code Compliance
Inspections Division
Approved with Conditions
Date: 10/31/17

L. (P-3D) Pool Area Shower: Kohler K-P15611-4N Coralais, pressure-balancing mixing va package. Provide with Kohler K-304-KS valve, single handle valve trim and K-72418 Awal G90 fixed shower head, 2.0gpm. Provide with Kohler K-728-K diverter, K-T10182 diverter trim, K-98361 Awaken G90 handheld head with 24” slidebar and K-98350 hose connection. Provide integral checks and screwdriver service check-stops.

M. (P-4) Kitchen Sink, Single Bowl: Just US-ADA-13518-A or approved equal, undermount, 18 gauge Type 304 stainless steel, 18"x13.5" overall size, 5-1/2” deep, fully sound deadened.

1. Faucet: Kohler K-6665 Wellspring, single lever handle, high spout, polished chrome finish, ceramic control cartridge.

2. Strainer: Grid strainer with bright metal finish.

N. (P-4A) Kitchen Sink, Single Bowl, ADA Compliant: Just US-ADA-13518-A or approved equal, undermount, 18 gauge Type 304 stainless steel, 18"x13.5" overall size, 5-1/2” deep, fully sound deadened.

1. Faucet: Kohler K-6665 Wellspring, single lever handle, high spout, polished chrome finish, ceramic control cartridge.

2. Strainer: Grid strainer with bright metal finish.

3. Where applicable the installation of and accessories shall meet ADA guidelines and ANSI A117.1.

O. (P-4B) Kitchen Sink, Double Bowl, ADA Compliant: Just UD-ADA-1832-A or approved equal, undermount, 18 gauge Type 304 stainless steel, 32"x18" overall size, 5-1/2” deep, fully sound deadened.

1. Faucet: Kohler K-597 Simplice, single lever handle, pull-down high spout, polished chrome finish, ceramic control cartridge.

2. Strainer: Grid strainer with bright metal finish.

3. Where applicable the installation of and accessories shall meet ADA guidelines and ANSI A117.1.

P. (P-5) Washing Machine Supply and Drain: Oatey, fire-rated, in-wall concealed, 2" drain, single ¼ turn shutoff valve to provide simultaneous control of hot and cold water and water hammer arrestors.

Q. (P-5A) Laundry Tub: Just J-251 or approved equal, double compartment, free standing, 14 gauge Type 304 stainless steel, 51”x27” overall dimensions.

1. Faucet: Just JS-49-TGSA wall mounted, chrome plated, swing gooseneck spout, quarter turn lever handles.

2. Strainer: Removable basket strainer with stopper.

Reviewed for Code Compliance
Inspections Division
Approved with Conditions
Date: 10/31/17

R. (P-6) Mop Basin: Fiat Model MSB2424 or approved equal, molded stone, 24"x24"x12" w 1" wide shoulders, 6" drop front; 3" stainless steel drain with combination dome strainer and lint basket.

1. Faucet: Fiat Service Faucet Model 830-AA, Speakman, or approved equal, chrome-plated with vacuum breaker, integral stops, adjustable wall brace, pail hook, and 3/4" hose thread on spout.

2. Hose and Hose Bracket: Fiat Model 832-AA, 30" long flexible heavy duty 5/8" cloth reinforced rubber hose with 3/4" chrome coupling at one end, 5"x3", stainless steel bracket with rubber grip.

3. Wall Guard: Fiat Model MSG-2424, stainless steel wall guards.

4. Mop Bracket: Fiat Model 889-CC, 24" stainless steel.

5. Caulk around mop basin at floor and walls with white silicone caulk.

S. (P-7) Water Box: Oatey, fire-rated, in-wall concealed, ½" outlet, ¼ turn shutoff valve and water hammer arrestor.

T. (P-8) Bi-Level Water Cooler, ADA Compliant: Elkay LZSTL8C, bi-level electric water cooler, 8GPH of 50°F drinking water, stainless steel construction, vandal resistant pushbutton activation and bubbler.

U. (P-9) Scullery Sink: Just SB-345-12RL or approved equal, triple compartment, side drainboards, free standing, 14 gauge Type 304 stainless steel, 72"x27" overall dimensions.

1. Faucets: Two Just JS-48-TA1 wall mounted, chrome plated, swing spout, quarter turn lever handles.

2. Strainer: Removable basket strainer with stopper.

V. Provide stops on hot and cold water supplies to each fixture with key operators. Provide chrome-plated P-traps per Code. Fixture manufacturers shall be Kohler, Eljer, American-Standard, Comfort Designs, Grohe, Toto or equal.

W. (EW) Combination Eye / Face Wash, Laundry: Guardian GB1814-TP-TMV, with drain bowl, two (2) spray heads, 1-1/2" drain, provide with identification sign. Provide with Guardian Model G3600LF emergency thermostatic mixing valve set to deliver 85°F tempered water.

2.6 MISCELLANEOUS EQUIPMENT

A. Floor Drain, concrete floors (FD): Zurn Z-415, cast iron body with 3" bottom outlet, combination invertible membrane clamp, sediment bucket and adjustable collar. Strainer shall be 6" diameter Zurn "Type H" with clamping device, polished nickel-bronze. Floor drains shall have "deep seal" traps and trap primer connection, connect to

Reviewed for Code Compliance
Inspections Division
Approved with Conditions
Date: 10/31/17

nearest plumbing fixture.

B. Floor Drain, wood deck (FD): Zurn FD-2240, cast iron body with steel flange for wood deck mounting with flexible sheet flooring, 3" bottom outlet, nickel top. Floor drains shall have a trap primer connection and be connected to the nearest plumbing fixture.

C. Floor/Yard Cleanout (FCO/YCO): Zurn Z-1400 Watts, or approved equal, adjustable floor cleanout, cast iron body, with gas and watertight ABS tapered thread plug. Provide size equal to piping served with maximum size of 4".

1. Concrete floor finishes: Scoriated round polished bronze top.

2. Sheet tile finishes: Scoriated square polished bronze top recessed to receive tile.

3. Carpeted finishes: Scoriated round polished bronze top and carpet marker.

D. Wall Cleanout (WCO): Sanitary tee with threaded raised nut or countersunk-nut cleanout plug located behind Zurn Z-1468, Watts, or approved equal, round stainless steel wall access cover.

E. Interior Wall Hydrants (HB):

1. Publicly accessed spaces (Pool): Woodford Model B79, 3/4" size, brass body, automatic draining, recessed box with door, loose key tee, with anti-siphon vacuum breaker.

2. Back of house spaces (Laundry): Woodford Model 24, 3/4" size, brass body, automatic draining, wheel handle, with anti-siphon vacuum breaker.

G. Strainer: Watts Series 777, MIL-S-16293, bronze body wye-type, 200 WOG rating, screwed end connections, 20 mesh stainless steel, monel, or bronze screen.

H. Freezeless Wall Hydrant (FPHB): Woodford Model B65, 3/4" size, brass body, automatic draining, recessed box with door, loose key tee, with anti-siphon vacuum breaker.

I. Water Hammer Arrestor (Shock Absorber): Plumbing and Drainage Institute listed.

Schedule:

"A" - Size #100 PDI - 0-11 Fixture Units
"B" - Size #200 PDI - 12-32 Fixture Units
"C" - Size #300 PDI - 33-60 Fixture Units

J. Vacuum Breaker: Watts Model LFN36, 3/4" size, 15 CFM capacity.

K. Water Meter: Coordinate with the Portland Water District and include the cost of the meter and installation per the Water District requirements.

M. Backflow Preventers (BFP): Conforming to AWWA C506, FCCHR-USC Manual Section 10,

Reviewed for Code Compliance
Inspections Division
Approved with Conditions
Date: 10/31/17

and UL listed. Types, sizes and capacities scheduled, Apollo, Zurn or Watts.

1. Double Check (DC): Double check backflow assembly with test ports, bronze body with stainless steel springs, corrosion resistant internals, stop and waste ball valves.

2. Atmospheric Double Check (DCA): Double check continuous pressure type with atmospheric port for low hazard applications, 250°F maximum water temperature, bronze body, stainless steel internals with rubber seals and integral strainer.

3. Reduced Pressure Zone (RPZ): Reduced pressure principle type; bronze body with stainless steel internals. Provide bronze body ball valves, test cocks, and air gap fittings.

O. Yard Hydrants (YH): Shall be Zurn Model Z1397, “Flo-Trol” with exposed head, non-freeze, vacuum breaker, ¾”.

P. Rainwater Filters (Inline): Bio Clean Environmental Downspout Filter (BC-DF), stainless steel internal components, integral internal bypass, inlet and outlet rubber boots for removal, IAPMO and UPC approved. Provide pipe size indicated on drawings or one size larger. Provide one extra set of internal filter media per device for quick replacement/exchange.

Q. Trap Primer (TP): Zurn Z-1022-XL Automatic Trap Primer (ONLY), all bronze body with integral vacuum breaker, non-liming internal operating assembly with gasketed bronze cover, flow-thru design operates on a 2-5psi pressure drop and with low-flow fixtures.

R. Indirect Waste Receptor (IW): Zurn Model Z1025-4, 4” (U.N.O.), fixed air gap, dura-coated cast-iron, with Z1000-P, trap primer connection.

S. Thermostatic Mixing Valve (TMV): Thermostatic controller shall be Symmons or equal, of capacity and size indicated. Provide regulator valve, swivel action check stops, removable cartridge, thermometers, integral check valves, strainer, stainless steel piston and liquid fill thermal motor with bellows element mounted out of water, in rough chrome finish.

T. Rainwater Filters (Inline): Bio Clean Environmental Downspout Filter (BC-DF), stainless steel internal components, integral internal bypass, inlet and outlet rubber boots for removal, IAPMO and UPC approved. Provide pipe size indicated on drawings or one size larger. Provide one extra set of internal filter media per device for quick replacement/exchange.

2.7 WATER HEATING EQUIPMENT

A. Gas-Fired Water Heaters (GFWH-#): A.O. Smith Cyclone MXi, or approved equal, packaged unit of make, model, and performance as scheduled on Drawings; UL 732 and ASHRAE 90.1 compliant, ASME code construction with adjustable range thermostat. Set to provide 140°F water temperature. Hot and cold water connections shall be 2" (minimum). Design and construction shall be vertical fire tube, single pass, down fired design with storage tank. The burner shall be stainless steel.

Reviewed for Code Compliance
Inspections Division
Approved with Conditions
Date: 10/31/17

1. The tank and heat exchanger shall have a fifteen (15) year warranty.

2. Shall have 2" thick foam or fiberglass insulation and steel storage tank. Multiple copper tube heat exchange coils shall be provided. The tank shall be warranted for a minimum of three (3) years in commercial service.

3. Installation shall be in accordance with the manufacturer's recommendations.

4. Furnish with acid neutralization kits and venting kits. Units shall be vented in accordance with the manufacturers recommendations. The operating control shall be electronic with digital display and temperature readout.

5. Accessories shall include electronic flame monitoring, electronic low water cut-off, immersion operating control, immersion UL-listed temperature limiting device. ASME temperature and pressure relief valve.

2.8 ELEVATOR SUMP PUMP

A. Elevator Pit Drainage System: Stancor, Inc., Model SE75 "Oil-Minder System", Zoeller or approved equal, 50GPM at 20FT head, 3/4HP, 3600 RPM, 120V, 5A, 2" discharge with check valve, float switch. A NEMA 4X control panel and a self-cleaning, hermetically sealed, stainless steel oil sensing probe shall alarm if oil is sensed. The pump shall be submersible with discharge check valve. The equipment shall be UL-listed. Provide control panel cable extensions as required for location indicated on drawings. Provide one pump and control package per elevator cab.

PART 3 EXECUTION

3.1 SURFACE CONDITIONS

A. Inspection:

1. Prior to work of this Section, carefully inspect the installed work of other trades and verify that such work is complete to the point where this installation may properly commence.

2. Verify that plumbing may be installed in strict accordance with pertinent codes and regulations and the reviewed Shop Drawings.

3.2 INSTALLATION OF PIPING

A. Provide and erect in accordance with the best practice of the trade piping shown on the drawings and as required to complete the intended installation. Make offsets as shown or required to place piping in proper position to avoid other work and to allow the application of insulation and finish painting to the satisfaction of the Architect.

B. The size and general arrangements, as well as the methods of connecting piping, valves, and equipment, shall be as indicated, or so as to meet the requirements of the Architect.

Reviewed for Code Compliance
Inspections Division
Approved with Conditions
Date: 10/31/17

C. Piping shall be erected so as to provide for the easy and noiseless passage of fluids under working conditions.

D. Install unions to facilitate removal of equipment.

E. Copper pipe shall be reamed to remove burrs.

F. Connections between copper and steel piping shall be made with dielectric fittings.

G. Solder joints shall be made with lead free solder. Clean surfaces to be soldered and use a paste flux. Wash joints with sodium bicarbonate and water to remove corrosive effects of heated solder paste. Caution: Lead-bearing solder is not permitted.

H. Pipe penetrations through walls, floors and ceilings shall be in accordance with Section 23 05 00 "Supplemental General Mechanical Requirements". Traverse points of piping shall be escutcheoned with split chrome floor and ceiling plates and spring anchors, where visible to occupancy.

I. Provide a cleanout in the vertical position at the base of each sanitary drop.

J. Sanitary and vent piping shall be sized and installed at 1/4" per foot slope. Sanitary piping 4” and larger may be installed at 1/8” per foot slope.

K. All vertical and horizontal penetrations through walls, floors and ceilings shall be sealed against air movement between spaces.

3.3 PIPE HANGERS

A. Impact driven studs are prohibited.

B. Copper Tubing: supported at intervals with rod sizes as follows, double nuts on hangers and on beam clips.

Copper Size	Hanger Intervals	Rod Sizes
1/2"	5'	3/8"
3/4"	6'	3/8"
1"	6'	3/8"
1-1/4"	8'	3/8"
1-1/2"	8'	3/8"
2"	10'	3/8"

C. Cast Iron Pipe: Supported at intervals with rod sizes as follows, double nuts on hangers and on beam clips.

Cast Iron Size	Hanger Intervals	Rod Sizes
1-1/2"	5'	3/8"
2"	5'	3/8"
2-1/2"	5'	1/2"
3"	6'	1/2"
4"	7'	5/8"

Reviewed for Code Compliance
Inspections Division
Approved with Conditions
Date: 10/31/17

D. PVC/CPVC Pipe: Supported at 4 foot intervals.

E. Verticals: Supported by use of clamp hangers at every story height, and at not more than 6 feet intervals for copper piping 1-1/4" and smaller size.

F. Spring Isolators: All pipe 20' upstream and downstream of pumps.

3.4 CLOSING IN UNINSPECTED WORK

A. General: Cover up or enclose work after it has been properly and completely reviewed.

B. If any of the work is covered or enclosed prior to required inspections and review, uncover the work as required for the test and review. After review, tests and acceptance, repairs and replacements shall be made by the appropriate trades with such materials as necessary for the acceptance by the Architect and at no additional cost to the Owner.

3.5 CLEANUP AND CORROSION PREVENTION

A. Upon completion of the work thoroughly clean and flush piping systems to the sewer with water.

B. Fixtures, piping and equipment shall be thoroughly cleaned. Dirt, dust, and debris shall be removed and the premises left in a clean and neat condition.

C. Caulk around fixtures at floor and wall.

D. Before covering is applied to piping systems, clips, rods, clevises and other hanger attachments, and before uncovered piping is permitted to be concealed, corrosion and rust shall be wire brushed and cleaned and in the case of iron products, a coat of approved protective paint applied to these surfaces. When corrosion is from the effects of hot solder paste, the areas shall be cleaned and polished and a wash of bicarbonate of soda and water used to neutralize the acid condition.

3.6 DISINFECTING

A. After the entire potable water system is completed, cleaned and tested, and just before the building is ready to be occupied, disinfect the system as follows: After flushing the mains, introduce a water and chlorine solution for a period of not less than three hours before final flushing of the system.

3.7 TESTS

A. Sanitary soil, waste and vent piping: Fill with water to top of vents, and test as required by Code.

B. Water piping shall be tested to a pressure of 100 lbs. per square inch for at least 30 minutes. Pressure drop in this period shall not exceed two pounds per square inch.

Reviewed for Code Compliance
Inspections Division
Approved with Conditions
Date: 10/31/17

Leaks shall be repaired and system retested. Notify Architect 24 hours before test is t
be performed.

3.8 INSTRUCTIONS

A. On completion of the project, provide a competent technician to thoroughly instruct the Owner's representative in the care and operation of the system. The total period of instruction shall not exceed four (4) hours. The time of instruction shall be arranged with the Owner.

3.9 FIRESTOPPING

A. Firestopping shall be performed in accordance with Specification Section 07841 “Firestopping”. All penetrations of fire-rated assemblies including walls and floors by mechanical system components (piping, ductwork, conduits, etc.) shall be firestopped as specified.

* END OF SECTION *

Reviewed for Code Compliance
Inspections Division
Approved with Conditions
Date: 10/31/17

SECTION 230000

HVAC SYSTEM

PART 1 GENERAL

1.1 DESCRIPTION

A. The work covered by this Section of the specifications includes the furnishing of labor, materials, equipment, transportation, permits, inspections and incidentals and the performing of operations required to install the heating, ventilating and air conditioning systems indicated.

1.2 RELATED DOCUMENTS

A. The drawings and the specifications including Section 23 05 00 "Supplemental Mechanical General Requirements" are hereby made a part of the work of this section.

B. Drawings and general provisions of Contract including General and Supplementary Conditions and all Division 1 specification sections.

1.3 SUBMITTALS

A. Substitutions: Your attention is directed to Section 23 05 00-"Substitutions", relative to competition and the (ONLY) notation. Familiarity with this section should be achieved before reading the PRODUCTS section of this specification.

B. The items for which the submittals paragraph in Section 23 05 00, Supplemental Mechanical General Requirements, apply are as follows:

1. Piping materials and accessories.
2. Hangers.
3. Piping, valve and equipment identification.
4. Fans.
5. Gas-fired Make-Up Air Unit.
6. Electric heating equipment.
7. Packaged Terminal Air Conditioning Units.
8. Variable Refrigerant Flow Heat Recovery System.
9. Split System Air Conditioning Units.
10. Pool Dehumidification System.

C. Section 01 33 00 - Submittal Procedures: Submittal procedures.

D. Product Data: Submit data on product characteristics, performance criteria and limitations.

E. Manufacturer's Installation Instructions: Submit procedure for preparation and installation.

Reviewed for Code Compliance
Inspections Division
Approved with Conditions
Date: 10/31/17

F. Manufacturer's Certificate: Certify products meet or exceed specified requirements.

PART 2 PRODUCTS

2.1 PIPING MATERIALS AND ACCESSORIES

A. Refrigerant Piping:

1. Refrigerant Piping: Dimensions and material requirements for pipe, pipe fittings and components shall conform to ASHRAE 15 and ANSI B31.5 and shall be compatible with fluids used and capable of withstanding the pressures and temperatures of the service.

2. Tubing used for refrigerant service shall be cleaned, sealed, capped, or plugged prior to shipment from the manufacturer's plant.

3. Copper Pipe and Fittings: Provide seamless copper tubing, hard drawn, Type ACR tubing, ASTM B 88, or ASTM B 280. Piping that is concealed (not exposed to view) may be soft temper.

   a. Fittings for copper tubing shall be wrought copper, brazing, or solder-joint type, ANSI B16.22.

   b. Flared, soft copper tubing shall be annealed ASTM B 280 and may be used only in nominal sizes smaller than one inch for connection to equipment and no larger than 1-3/8 inches outside diameter for other connections.

   c. Flanges shall be of bronze, ANSI B16.24.

4. Brazing Materials: Provide AWS A5.8 brazing filler metal Type BAg-5 with AWS Type 3 flux, except Type BCuP-5 or BCuP-6 may be used for brazing copper-to-copper joints. Piping shall be continuously purged with nitrogen during brazing operations.

5. Soldering Materials: Provide ASTM B 32, Grade Sb5, tin-antimony alloy. Soldering flux shall consist of petrolatum base impregnated with zinc and ammonium chlorides.

6. Gaskets: Provide ASTM D 2000, fluorinated elastomers compatible in form with grooves in the flange faces.

7. Refrigerant piping located underground shall be installed within a PVC sleeve. Refrigerant piping shall be installed in accordance with the equipment manufacturers recommendations.

2.2 HANGERS

A. Adjustable Swivel Hanger: Pipe Sizes 2" and Less: Carpenter and Paterson Fig. 800 conforming to MSS-SP-58, oversize for insulated piping systems. Pipe Sizes Larger Than 2": Carpenter and Paterson Fig. 100, oversize for insulated piping systems.

Reviewed for Code Compliance
Inspections Division
Approved with Conditions
Date: 10/31/17

B. Riser Clamp: Carpenter and Paterson Fig. 126 and Fig. 126 CT conforming to MSS-SP- provide copper plated clamps on copper pipes.

2.3 PIPING, VALVE AND EQUIPMENT IDENTIFICATION

A. Pipe Identification: Provide plastic "wrap around" identification markers by Seton or Setmark indicating flow direction and fluid flowing for the following:

Refrigerant piping

1. Markers shall be placed 30-50 ft. apart for piping in accessible areas.

2. Markers shall be placed outside the pipe insulation and in the most obvious location for viewing. Markers shall not be installed in exposed areas except in the mechanical rooms.

3. Piping identification shall be color-coded and in accordance with ANSI.

B. Equipment Identification:

1. Provide laminated plastic nameplates for boilers, pumps, and air handling units. Laminated plastic shall be 0.125-inch thick melamine plastic conforming to Fed. Spec. L-P-387, black with white center core. Surface shall be a matte finish, corners shall be square. Accurately align lettering and engrave into the white core. Minimum size of nameplates shall be 1.0 inch by 2.5 inches. Lettering shall be minimum of 0.25-inch high normal block lettering.

C. Valve Tags:

1. Attach to each valve a 1-1/2" round or octagonal brass tag with 1/2" indented numerals filled with a durable black compound. In addition to the valve numbers, each tag shall identify the system it controls. Service stop valves exposed in finished areas need not be tagged.

2. Tags shall be securely attached to stems of valves with copper or brass "S" hooks, or chains.

3. Valve charts shall be provided for each piping system and shall consist of schematic drawings of piping layouts, showing and identifying each valve and describing its function. Upon completion of the work, one (1) copy of each chart, sealed to rigid backboard with clear lacquer placed under glass and framed, shall be hung where directed. Two (2) additional unmounted copies shall be delivered to the Architect.

4. Tags and charts shall be coordinated with Section 22 00 00 Plumbing and when completed this work shall have been done sequentially.

2.4 ELECTRIC HEATING EQUIPMENT (ECUH & EWH)

Reviewed for Code Compliance
Inspections Division
Approved with Conditions
Date: 10/31/17

A. Electric Heaters shall be Qmark, Berko, Chromalox, or approved equal, commercial du with integral disconnect switch, control transformer, relay, high limit thermostat, UL-list

B. Electric heaters shall have capacities and performance as scheduled.

2.5 FANS (EF)

A. Shall be model indicated. Fan manufacturers shall be Greenheck, Cook or equal. The fans shall include housing, fan wheel, shaft, bearings, inlet shroud, motor, mounting support and mounting frame as a factory-assembled unit. An OSHA-approved belt guard for each fan shall be included. The fan drive shall have a 1.5 service factor for the maximum rated horsepower. Provide a disconnect switch for each fan. Provide gravity-operated, gasketted backdraft dampers for all exhaust fans. Kitchen hood exhaust fans shall be upblast type, UL-listed for grease exhaust applications with hinged ventilated curb and grease cup.

B. Bearings shall be precision, flange-mounted self-aligning ball bearings at inlet and discharge. Minimum average L50 design life shall be 200,000 hours at maximum catalogued operating conditions. Grease lines shall extend to the exterior of the fan housing.

C. Submit sound power data for inlet and discharge sound.

D. Submit fan curves for each fan with the design operating point clearly marked.

E. Spring Type Vibration Isolators: Mason Industries Model HS, select for 1.5" static deflection. Provide for all fans that are not curb-mounted.

F. Roof fans and duct penetrations thru the roof shall have 18" high insulated pre-fabricated and self-flashing insulated curbs by Conn-Fab, or approved equal. Provide a suitable foam gasket between the curb and fan base to seal airtight. Single phase fan motors shall be ECM-type, where available, Greenheck “Vari-Green” or equal. Three-phase motors shall be premium, high efficiency type.

2.6 INDIRECT-FIRED ROOFTOP MAKE-UP AIR UNIT w/ PACKAGED COOLING (MAU)

A. General: Make-Up Air unit shall be as manufactured by Greenheck or approved equal provided all specifications are met. Greenheck “IGX” equipment is used as the basis of design, suitable for use on natural gas. Performance to be as scheduled on the drawings. Provide an insulated roof curb. The unit shall be designed for 100% outside air.

B. Gas Train and Controls: Indirect fired gas system shall have a draw through design, stainless steel heat exchanger and burner for optimal burning efficiency. Flame safeguard shall be Honeywell 7800 series with digital coded fault indicator capability. Fault indicator shall provide service history by storing codes for the last five faults. Safety shutoff valves shall be industrial duty and use 120 VAC control power. Temperature control shall incorporate a Maxitrol electronic modulation control system for discharge air control with room sensor reset. Provide a motorized discharge damper. Furnish with high/low gas pressure switch and freezestat.

C. Unit Casing and Frames: Unit shall have solid double wall construction and shall be of internal frame type construction of galvanized steel. The interior liner shall be 22 gauge

Reviewed for Code Compliance
Inspections Division
Approved with Conditions
Date: 10/31/17

galvanized steel. All frames and panels shall be G90 galvanized steel. Where top panels a joined there shall be a standing seam to insure positive weather protection. All metal-to-metal surfaces exposed to the weather shall be sealed, requiring no caulking at job site. All components shall be easily accessible through removable or hinged doors. Construction shall be completely weatherproof and suitable for outdoor locations. The unit exterior shall be finished with epoxy paint with color selection by Architect.

D. Insulation: Unit casing to be lined with 1 in. fiberglass insulation. Insulation in accordance with NFPA 90A and tested to meet UL 181 erosion requirements and secured to unit with water proof adhesive and permanent mechanical fasteners.

E. Fan Section: Centrifugal fans shall be double width, double inlet. Fan and motor shall be mounted on a common base and shall be internally isolated All blower wheels shall be statically and dynamically balanced. Ground and polished steel shafts shall be mounted in permanently lubricated ball bearings or ball bearing pillow blocks. Bearings shall be selected for a minimum (L10) life in excess of 100,000 hours at maximum cataloged speeds.

F. Motors and Drives: Motors shall be energy efficient, complying with EPACT standards, for single speed ODP and TE enclosures. Motors shall be permanently lubricated, heavy duty type, matched to the fan load and furnished at the specified voltage, phase and enclosure. Drives shall be sized for a minimum of 150% of driven horsepower. Pulleys shall be cast and have machined surfaces, 10 horsepower and less shall be supplied with an adjustable drive pulley.

G. Electrical: All internal electrical components shall be prewired for single point power connection. All electrical components shall be UL listed, recognized or classified where applicable and wired in compliance with the National Electrical Code. Control center shall include motor starter, control circuit fusing, control transformer for 120 VAC circuit, integral door interlocking disconnect switch with separate motor fusing and terminal strip. Contactors, Class 20 adjustable overload protection and single phase protection shall be standard.

H. Filter Section: Filters shall be 2" thick aluminum mesh mounted in a V-bank arrangement such that velocities across the filters do not exceed 550 feet per minute. Filters shall be accessible through a removable access panel.

I. Weather Hood and Accessories: The outside air weather hood shall be constructed of G90 galvanized steel with birdscreen mounted at the intake, painted to match the unit. Provide a freeze protection thermostat in the discharge plenum with manual reset feature and a room thermostat to reset the discharge temperature based on space temperature.

J. Cooling Section: The packaged cooling section shall consist of a DX cooling coil and air-cooled condensing unit. Two (2) scroll compressors shall be provided with crankcase heaters, thermal expansion valve, hot gas bypass and multiple condensing fans with fan cycling control. The lead compressor shall be a digital scroll. The compressors shall be furnished with a five (5) year parts warranty. The condensing unit shall have copper tubes and aluminum fins. The evaporator coil shall have copper tubes and aluminum fins with circuiting and performance as scheduled.

2.7 PACKAGED TERMINAL AIR CONDITIONING UNITS (PTAC)

Reviewed for Code Compliance
Inspections Division
Approved with Conditions
Date: 10/31/17

A. The packaged vertical terminal air conditioning units shall be Amana DigiSmart, First Compa or equal, with packaged DX cooling and electric heating coil. Capacities and performance shall be as scheduled.

B. Furnish with wall sleeve and architectural grille. The exterior grille shall have custom painted Architectural grille as required to meet the Architect's requirements. Note that there may be multiple colors required. The installation shall include all accessories as recommended by the manufacturer including a service disconnect, low ambient compressor lock-out, fan delay relay, adjustable fresh air damper, access / return air panel, digital wall mount thermostat, insulation kit. Installation shall be per the manufacturers recommendations.

2.8 SPLIT SYSTEM AIR CONDITIONING UNITS (SAC / SCU)

A. The split system air conditioning units shall be Mitsubishi, Sanyo, LG or Daikin with capacities and performance as scheduled, R410A, heat pumps with inverter driven compressors, wall mounted indoor units, as indicated with outdoor units. Furnish each unit with a wired wall-mounted controller. Cooling capacity shall be as scheduled with entering conditions of 75^0F. EDBT, 67^0F. EWBT and 95^0F. ambient. The indoor units shall operate on 208V. and the outdoor units shall operate on 208V.-1 phase power. Furnish with **integral "Maxi-Blue" or "Mini-Blue"** condensate pumps by Charles Austen Pumps, LTD, size as required, condensate overflow safety switches, refrigerant piping, pipe insulation, wiring and condensate piping as recommended by the manufacturer. Furnish with wired controllers. The air conditioning units shall be suitable for low ambient cooling operation at 0^0F. Indoor units shall be wall-mounted, as indicated.

B. The units shall be suitable for refrigerant line lengths of up to 150 feet between the indoor evaporator and the outdoor condensing unit. Outdoor units shall be set on a concrete pad on prefabricated galvanized equipment supports/stands by Kees or Greenheck. The indoor units shall be piped in an aesthetically pleasing manner with a minimum of exposed piping. Exposed piping shall have a finished molded PVC cover. Installation shall be per the manufacturers recommendations.

2.9 POOL DEHUMIDIFICATION UNIT (PAH)

A. Furnish and install a natatorium environmental system, specifically designed for temperature and humidity control of swimming pool environments. The system shall be Dectron "Dry-O-Tron", Pool-Pak, Seresco, or equal. Capacities and performance shall be as scheduled. Electrical characteristics shall be 208V.-3Phase-60Hz.

B. Systems shall include compressor(s), water cooled condenser(s), pool water heater(s), electric duct heater (2-stage), supply air blower(s), blower motor(s), magnetic motor starters and controls in a packaged enclosure. The entire unit shall be ETL listed and / or CSA listed. Refrigerant piping shall be Type L copper with brazed joints. The entire unit shall have a baked polyester coating or be epoxy-coated inside and out for corrosion resistance. Coils shall have a baked epoxy coating. The drain pan shall be constructed of resin.

C. Hinged access doors shall be provided for all accessible components requiring routine access. Filters shall be 30-35% efficient, MERV8 with two (2) spare sets. The unit shall be

Reviewed for Code Compliance
Inspections Division
Approved with Conditions
Date: 10/31/17

insulated with a minimum ½" thick fiberglass duct liner. The space heating coil shall be electric resistance type with 2-stage controller. Heat exchangers in contact with pool wa shall be of cupronickel construction. Refrigerant circuits shall be designed for R-410A, with hermetic or scroll compressors, suction gas cooled and with internal solid state sensor thermal protection, with crankcase heater and 3 year extended warranty.

D. The unit shall be monitored and controlled by a solid state microprocessor system complete with a control panel equipped with an integrated 4-line by 20 character backlit LCD display and keypad. The controller shall monitor and control all system functions.

E. The unit start-up shall be supervised by an authorized representative of the manufacturer.

2.10 VARIABLE REFRIGERANT FLOW (VRF) HEAT RECOVERY SYSTEM (ACCU / FC)

A. The Variable Refrigerant Volume Heat Recovery systems shall be Mitsubishi, Daikin, Fujitsu, Samsung or equal with capacities and performance as scheduled, Variable Refrigerant Volume/Flow, R410A, 2-pipe heat recovery with inverter driven compressors, ceiling cassette, wall mounted or ducted indoor units as indicated, with outdoor condenser units. Furnish each unit with a wired wall-mounted controller ONLY. Heating and cooling capacity shall be as scheduled. The indoor units shall operate on 208V-1 phase power and the outdoor units shall operate on 208V-3 phase power. Furnish indoor units with **integral "Maxi-Blue" or "Mini-Blue"** condensate pumps by Charles Austen Pumps, LTD, or Mitsubishi Model SI30-230, size as required, condensate overflow safety switches, refrigerant piping, pipe insulation, wiring and condensate piping as recommended by the manufacturer. Piping joints and headers in the refrigeration piping shall be manufactured by the system manufacturer, piping shall be type nitrogen-purged ACR Copper. Furnish with wired central controller located in mechanical room. The systems shall be capable of providing a minimum of 75% of their nominal rated heating capacity at -13°F outside temperature. Indoor units shall be ducted, ceiling or wall mount type, as indicated. System shall be capable of heating or cooling each space at any given time to meet the requirements of each space (simultaneous heating and cooling of different spaces), master system controller shall provide 7-day timeclock with adjustable occupied/unoccupied schedule and temperature setpoints and communicate with single split AC systems as well. Branch Controllers (BC) shall be provided as required and furnished with isolation ball valves for each refrigerant line circuit to each piece of equipment.

B. The units shall be suitable for the refrigerant line lengths and arrangement indicated. Outdoor units shall be set on the roof and raised up a minimum of 24" by galvanized steel equipment supports by Kees or equal. Provide <u>snow / hail guards and base pan heaters</u>. The indoor units shall be piped in an aesthetically pleasing manner with no exposed piping. Installation shall be per the manufacturer's recommendations with all necessary accessories and options.

C. The outdoor unit shall have rated performance of heating operation at -13^{0}F ambient temperatures and cooling mode down to 23^{0}F ambient temperatures, without additional low ambient controls. Heating capacity shall be 100% at 5F. Outdoor units shall have base pan heaters. The unit(s) shall maintain 100% heat output at 0^{0}F without a supplemental heat source or a second compressor to boost low ambient heating performance. Provide low ambient cooling kit for operation down to -4F. If an alternate manufacturer is selected, any additional material, cost, and labor to meet low ambient operating condition and performance shall be incurred by the Contractor. Compressors shall be inverter-driven scroll type. Heat

Reviewed for Code Compliance
Inspections Division
Approved with Conditions
Date: 10/31/17

exchanger shall be a copper pipe-in-pipe structure, unit shall include a high pressure sen and switch, inverter overcurrent/overheat protection, compressor overheat protection, au defrost mode.

PART 3 EXECUTION

3.1 SURFACE CONDITIONS

A. Inspection:

1. Prior to work of this Section, carefully inspect the installed work of other trades and verify that such work is complete to the point where this installation may properly commence.

2. Verify that the heating system may be installed in accordance with pertinent codes and regulations and the reviewed Submittals.

3.2 INSTALLATION OF PIPING

A. In general, piping shall be run concealed above ceilings in occupied areas. Piping in other areas may be run exposed. Piping shall not be exposed in occupied spaces unless written authorization is given by the Architect.

B. Provide and erect in accordance with the best practice of the trade piping shown on the Drawings and as required to complete the intended installation. Make offsets as shown or required to place piping in proper position to avoid other work and to allow the application of insulation and finish painting to the satisfaction of the Architect.

C. The size and general arrangements, as well as the methods of connecting piping, valves, and equipment, shall be as indicated, or so as to meet the requirements of the Architect.

D. Piping shall be erected so as to provide for the easy and noiseless passage of heating fluid under working conditions. Inverted eccentric reducing fittings shall be used whenever water pipes reduce in size.

E. Water mains shall be run level or pitch slightly upward so that no air pockets are formed in the piping. The mains shall be set at elevations such that the runouts feeding equipment shall have no pockets where air can collect except where vents are provided. Provide drains at low points in the piping systems.

F. High points in water piping shall be provided with manual vents.

G. In the erection of water piping, make proper allowances for expansion and contraction. Piping shall be anchored as necessary to control expansion. Hot water runouts to units shall be the size as indicated on the Drawings and shall come off the main downward or off the side with a minimum of two 90° elbows provided on runout from main.

H. Install stop valves and unions to facilitate isolation and removal of equipment. Provide final connections for hydronic specialties furnished under other sections of the Specifications.

Reviewed for Code Compliance
Inspections Division
Approved with Conditions
Date: 10/31/17

I. Steel piping with screwed connections. Threads on piping shall be full length and clean- with inside edges reamed smooth to the full inside bore. Close nipples shall not be used. Pipe threads: standard pipe threads, machine cut and full length. Pipe: reamed to remove burrs and up-ended and rapped to dislodge dirt and scale. Joint compound shall be applied to male thread only. If it is necessary to back off a screwed joint after it is made, the thread shall be cleaned and new compound applied. Caulked threads will not be permitted.

J. Connections between copper and steel piping shall be made with bronze fittings.

K. Install thermometer wells for temperature gauges and sensors, projecting a minimum of 2" into the pipe with extension to face of insulation. Piping 1-1/2" and smaller shall be enlarged to 2" where wells are installed. Wells shall be installed in active sections of piping. Fill wells with heat transfer fluid.

L. Solder joints shall be made with non-lead solder. Clean surfaces to be soldered and use a paste flux. Wash joints with sodium bicarbonate and water to remove corrosive effects of heated solder paste. Hot wipe solder at each fitting.

M. PVC piping shall have solvent welded joints except at connections to equipment and valves which shall be screwed for sizes 2" and smaller and flanged for sizes 2-1/2" and larger. Solvent welded joints: Pipe ends deburred, and beveled. Pipe end and fitting: Cleaned and dried, primed to soften bonding surfaces. Pipe end: Apply even full layer of solvent cement after priming. Before cement starts to set, insert pipe end into fitting and turn 1/4 turn to evenly distribute cement. Hold joint together until cement sets-up, wipe excess cement off joint.

N. Pipe penetrations through walls, floors and ceilings shall be in accordance with Section 23 05 00 “Common Work Results for HVAC”. Traverse points of piping shall be escutcheoned with split chrome floor and ceiling plates and spring anchors, where visible to occupancy.

O. Automatic Air Vents: Shall be installed with a manual isolation valve. The vent discharge shall be piped to a local floor drain.

3.3 PIPE HANGERS

A. Impact driven studs are not acceptable.

B. Pipes (copper or steel) shall be supported at intervals and rod sizes as follows, double nuts on hangers and on beam clips.

Reviewed for Code Compliance
Inspections Division
Approved with Conditions
Date: 10/31/17

Pipe Size	Hanger Intervals	Rod Sizes
1/2"	5'	3/8"
3/4"	6'	3/8"
1"	7'	3/8"
1-1/4"	8'	3/8"
1-1/2"	9'	3/8"
2"	10'	3/8"
2-1/2"	11'	1/2"
3"	12'	1/2"

C. Verticals: Supported at the base and at intervals as follows by use of clamp hangers:

Steel Pipe: Not more than 16 ft.

Copper Pipe and Tubing:

1-1/2" and larger - Not more than 12 ft.
1-1/4" and smaller - Not more than 6 ft.

D. Provide welded steel saddles at each hanger on steel piping systems 4" and larger.

E. PVC Piping: Supported at 4' intervals.

3.4 CLOSING IN WORK

A. Cover up or enclose work after it has been properly and completely tested and reviewed.

B. No additional cost to the Owner will be allowed for uncovering or recovering any work that is covered or enclosed prior to required test and review.

3.5 TEST AND ADJUST

A. After the installation is complete and ready for operation, test the system under normal operating conditions in the presence of the Architect and demonstrate that the system functions as designed.

B. Correct defects which develop in operational testing, conduct additional testing until defect free operation is achieved.

3.6 INSTRUCTIONS

A. On completion of the project, instruct the Owner's representative in the care and operation of the system. The period of instruction shall be for not less than one 8 hour period. The time of instruction shall be arranged with the Owner. In addition to the prime Mechanical Contractor and Owner's representative shall be present and participate in the Owner's instruction.

3.7 CLEANUP AND CORROSION PREVENTION

Reviewed for Code Compliance
Inspections Division
Approved with Conditions
Date: 10/31/17

A. Piping and equipment shall be thoroughly cleaned. Dirt, dust, and debris shall be remov and the premises left in a clean and neat condition.

B. Before covering is applied to piping systems, clips, rods, clevises and other hanger attachments, and before uncovered piping is permitted to be concealed, corrosion and rust shall be wire brushed and cleaned and in the case of iron products, a coat of approved protective paint applied to these surfaces. When corrosion is from the effects of hot solder paste, the areas shall be cleaned and polished and a wash of bicarbonate of soda and water used to neutralize the acid condition.

3.8 FIRESTOPPING

A. Firestopping shall be performed in accordance with Specification Section 07841 "Firestopping". All penetrations of fire-rated assemblies including walls and floors by mechanical system components (piping, ductwork, conduits, etc.) shall be firestopped as specified.

3.9 REFRIGERATION PIPING

A. Refrigeration Piping:

1. Provide and install refrigeration piping, hangers, and accessories as specified and required. The piping installation shall be performed by a qualified refrigeration mechanic under the direct supervision of the equipment manufacturer. Submit records of tests.

2. Refrigeration piping shall be Type ACR copper tube with brazed joints, or as recommended by the equipment manufacturer, nitrogen-charged equal to BCUP-2 Classification of American Welding Society.

3. The refrigeration system shall be tested as follows:

High pressure Side	300 psi
Low Pressure Side	150 psi

4. Support risers, offsets, and equipment, in an acceptable manner.

5. Piping shall be installed to meet Codes and regulations, applicable to the installation and in accordance with the best practice of the trade. Brazing shall be accomplished while sweeping piping with nitrogen.

6. Refrigerant accessories shall include required valves and fittings to provide a complete installation. Refrigerant suction and hot gas piping shall be insulated with ¾" thick Armaflex Type AP, or equal, elastomeric unicellular insulation. Exterior insulation shall have .032" thick circumferentially corrugated aluminum jacketing by Childers, solvent-welded ultraviolet resistant PVC jacketting, or approved equal.

7. Parts of the system not factory charged and field installed piping of components shall be evacuated to within .10 MM/Mercury of a perfect vacuum. Break the vacuum to 0 psig with oil-free nitrogen before charging. Hold vacuum overnight for leak test.

Reviewed for Code Compliance
Inspections Division
Approved with Conditions
Date: 10/31/17

8. Provide complete charges of refrigerant and oil to be maintained for the guarantee period.

9. Elbows shall be long radius.

10. The installation shall be in accordance with the above, with equipment manufacturer's instructions, and with established recommended practices.

11. System installation shall include the following:

    a. Pitch lines down in direction of flow a minimum of 1/2 inch per 10 feet.

    b. Trap suction risers as verified with the equipment manufacturer.

    c. Provide service shut-off valves on liquid and suction piping at air cooled condensing units and all indoor evaporators.

    d. Maximum filter-dryer pressure drops:

       1 psi for liquid line filter-dryer.

    e. Liquid line solenoid valve on each refrigeration circuit.

    f. Thermal expansion valve on each refrigeration circuit.

* END OF SECTION *

Reviewed for Code Compliance
Inspections Division
Approved with Conditions
Date: 10/31/17

SECTION 230500

SUPPLEMENTAL MECHANICAL GENERAL REQUIREMENTS

PART 1 GENERAL

1.1 RELATED DOCUMENTS

A. The General Conditions, Supplemental General Conditions and Instructions to Bidders shall apply to this work. Read these to be familiar with conditions related to the installation of the work.

B. Drawings and general provisions of Contract including General and Supplementary Conditions and all Division 1 specification sections.

1.2 WORK SHOWN ON DRAWINGS

A. The drawings accompanying this specification, as a part thereof, are working drawings indicating the location and arrangement of the increments of the systems of this section of work. Material deviation from this arrangement, process or means of application, shall bear the Engineer's review stamp before the change is made on the job or materials are ordered. Changes made without such review shall be ordered removed and items installed as specified shall be provided at no additional expense to the Owner.

B. The drawings are not intended to show in minute detail minor items of installation or materials such as specific fittings or findings.

1.3 MATERIALS AND LABOR

A. Furnish materials and labor necessary to deliver to the Owner a complete and operable system installed in accordance with the contract documents.

B. Materials shall be of the best quality. Workmanship shall be of highest grade and construction shall be done according to best practices of the trade.

C. Provide, when required, labeled samples of material or equipment specified herein or proposed to be used in this work.

D. Where words "furnish", "provide", or "install" are mentioned, either singly or in combination, these words are hereby interpreted to mean "furnish and install" or "provide and install", including materials complete with connections, supplemental devices, accessories and appurtenances, unless specifically otherwise noted. These words are likewise hereby interpreted as being prefixed to materials, equipment, and apparatus hereinafter mentioned, either in abbreviated or scheduled information or in the technical sections of the specifications.

Reviewed for Code Compliance
Inspections Division
Approved with Conditions
Date: 10/31/17

1.4 EQUIPMENT INSTALLATION IN HEATING SEASON

A. The system shall be installed such that the construction area will have sufficient heat to maintain temperature above 40°F throughout the construction period.

1.5 COOPERATION BETWEEN TRADES

A. Provide information sufficiently in advance of this work, so that work by the other trades may be coordinated and installed without delays. Furnish and locate sleeves, supports, anchors and necessary access panels.

B. Where work is concealed, assure it does not project beyond finished lines of floors, ceilings, or walls.

C. Equipment or piping requiring access found to be located above sheetrock ceilings shall be brought immediately to the attention of the Architect for resolution.

1.6 ORDINANCES, AUTHORITIES, PERMITS, AND FEES

A. Obtain necessary permits and licenses, give notices and comply with laws, ordinances, rules, regulations or orders affecting the work, and pay fees and charges in connection therewith.

B. The "authority having jurisdiction" is the organization, office, or individual responsible for "approving" equipment, an installation, or a procedure.

1.7 PROTECTION OF WORK AND MATERIALS

A. Protect and care for materials delivered and work performed until the completion of the work. Defective equipment or equipment damaged in the course of storage, installation or test shall be replaced or repaired to the satisfaction of the Engineer at no additional cost to the Owner.

1.8 INSURANCE

A. Purchase and maintain Public Liability and Property Insurance during the progress of the work and until completion and acceptance of the entire project by the Owner in the amounts as specified in the General Conditions.

1.9 APPLICABLE CODES

A. Work and materials shall conform to the latest rules and regulations listed below and these rules and regulations hereby are made part of this specification. They include, but are not necessarily limited to the following:

American Society for Testing and Materials (ASTM)
Underwriters' Laboratories, Inc. (UL)
Air Moving and Conditioning Assoc. (AMCA)
American Society of Heating, Refrigerating, and Air Conditioning Engineers (ASHRAE)

Reviewed for Code Compliance
Inspections Division
Approved with Conditions
Date: 10/31/17

American Society of Mechanical Engineers (ASME)
National Electrical Manufacturers Association (NEMA)
Institute of Electrical and Electronics Engineers (IEEE)
American National Standards Institute (ANSI)
National Fire Protection Association (NFPA)
American Water Works Association (AWWA)
Local Fire Code
Local Plumbing Codes
American Welding Society
International Building Code (IBC)
Maine Uniform Building and Energy Code (MUBEC)

1.10 SHOP DRAWINGS

A. Submit shop drawings, manufacturers' data and certificates for equipment, materials and finish, and pertinent details for each system where specified in each individual section, five (5) copies, to be submitted to the Architect. Shop drawings will be returned "No Exceptions Taken", "Make Corrections Noted", "Amend and Resubmit", "Submit Specified Item", or "Rejected" less two (2) copies. Work shall progress in accordance with "Reviewed" shop drawings (ONLY).

B. **Shop drawings that are facsimiled, (FAX) produced, or photocopies of FAX documents OR EMAILED will not be considered or reviewed. Only originals and or photocopied originals, complying with this section will be considered.**

C. Groups of similar shop drawings shall be submitted as individual bound documents with covers and indexes. Typical similar items would be "Diffusers and Registers", "Valves and Controls". Rejection of individual items shall not be cause for rejection of the entire document.

D. **Clearly indicate item(s) to be reviewed on each submission by highlighting or underlining intended item(s). Submissions not clearly marked shall be returned "Amend and Resubmit".**

E. Shop drawings must bear the Engineer's review stamp. In the event that the Engineer returns shop drawings "Amend and Resubmit" or "Rejected", the shop drawing must be revised and resubmitted for review.

F. Furnishing of the specified item must still produce the results and performance, dependability and quality reasonably to be expected within the spirit of the specifications, drawings, and the standard of good mechanical performance normal to the trade.

G. Section 013300 - Submittal Procedures: Submittal procedures.

H. Product Data: Submit data on product characteristics, performance criteria and limitations.

I. Manufacturer's Installation Instructions: Submit procedure for preparation and installation.

Reviewed for Code Compliance
Inspections Division
Approved with Conditions
Date: 10/31/17

J. Manufacturer's Certificate: Certify products meet or exceed specified requirements.

1.11 SUBSTITUTIONS

A. Where the specifications allow the substitution of a product, still this product is subject to review by the Engineer in accordance with the paragraph entitled "Shop Drawings". Review of a substitute item is an indication only that the substitute item is compatible with the specified item as a claim of the manufacturer. Insure dimensional propriety, performance, and quality of the substitute item.

B. Reference in the specifications or on the drawings to any product, material, fixture, form or type of construction, by proprietary name, manufacturer, make or catalog number, establishes a standard of quality or design and is not meant to limit competition. Use any equivalent substitute provided favorable written review by the Engineer is first obtained. The (ONLY) notation in the specification is an exception to this and leaves no option.

C. For materials or equipment which are supplied with integral or factory applied finish, the colors will be considered in evaluating substitutions.

D. For the purpose of avoiding conflicts with other trades, contracts, and adjoining work where more than one (1) article, device, material, fixture, form or proprietary name, manufacturer, make or catalog number, the first named shall be used as the basis of design and details. The cost of any changes because of substituted item shall be borne by the Contractor requesting such change.

PART 2 PRODUCTS

NOT USED

PART 3 EXECUTION

3.1 EQUIPMENT SUPPORTS

A. Furnish and install equipment supports for mechanical equipment as required. Supports shall be subject to review by the Engineer.

3.2 SLEEVES AND PREPARED OPENINGS

A. Coordinate cutting, patching and setting of sleeves, frames, framing and lintels for openings with other trades. Sleeves shall be furnished by the Contractor. All penetrations through concrete shall be sleeved as required by IBC.

B. Failure to give timely notice of and to locate openings and furnish sleeves shall cause no additional expense to the Owner.

3.3 CONNECTION TO EQUIPMENT

A. Provide piping connections, supports, brackets, compensators or flexible connections to prevent application of excessive stresses to equipment.

Reviewed for Code Compliance
Inspections Division
Approved with Conditions
Date: 10/31/17

B. Equipment shall be installed with flanges or unions in such a manner as to permit disconnecting for removal of tubes, coils, elements and other equipment for inspection, service and repairs.

3.4 ACCESS TO EQUIPMENT

A. The installation of work performed shall provide reasonable accessibility for operation, inspection, and maintenance of equipment and accessories. The Engineer shall determine the adequacy of such accessibility.

3.5 ACCESS PANELS

A. Access panels shall be provided where indicated on the drawings and as required for access to valves and other serviceable components.

B. Access panels installed in fire-rated assemblies shall have the same fire rating as the assembly.

3.6 PAINTING OF EQUIPMENT

A. Exposed ironwork, including steel supports and hangers in unfinished spaces, mechanical rooms, pits, and trenches shall be properly cleaned, prepared and painted with two (2) coats of black asphaltum varnish.

3.7 GUARDS

A. Exposed moving and rotating elements of mechanical equipment items shall be protected with suitable guards for personnel protection. Guards shall be of rigid construction, firmly positioned. Holes shall be provided in guards at shaft centers to facilitate tachometer readings.

3.8 LUBRICATION

A. Furnish and install grease fittings for points requiring lubrication. Furnish extension type fittings as required to provide easy access for maintenance lubrication.

B. Furnish initial charges of lubricants for equipment. Lubricants shall be in conformance with the manufacturer's requirements and recommendations.

3.9 ELECTRIC MOTORS AND MOTOR CONTROLS

A. Unless otherwise noted, motors, motor starters and other electrical accessories which are specified under Mechanical specifications shall be selected with characteristics as follows:

1/2 Horsepower and less - 120 volt, 1 phase, 60 Hz.
3/4 Horsepower and greater – 208 volt, 3 phase, 60Hz.

Reviewed for Code Compliance
Inspections Division
Approved with Conditions
Date: 10/31/17

B. Motors shall be built in accordance with the latest applicable NEMA, IEEE and ANSI Standards. Motors shall be of the latest type and quality specified under individual items of equipment.

C. Magnetic motor starters for mechanical items of equipment shall be furnished under Division 16 unless the starter is an integral part of a factory packaged item of equipment. Each starter furnished as an integral item of equipment shall be provided with overload heater elements. Starters shall have single phase protection or shall have relays installed to provide this feature. Starters shall be equipped with suitable step-down transformers to provide required control voltage.

D. Motors shall have a minimum continuous duty service factor of 1.15. Minimum motor efficiency shall be:

MOTOR HORSEPOWER	PERCENTAGE EFFICIENCY		
	(1200RPM)	(1800 RPM)	(3600 RPM)
1,1-1/2,2,3	----	78.0	76.0
5	87.4	87.4	86.3
7.5	89.4	89.8	87.7
10	89.7	90.3	89.0

3.10 CLEANING OF SYSTEMS

A. Piping systems shall be thoroughly cleaned and flushed prior to initial operation.

B. Thoroughly clean exposed portions of the mechanical installation, removing labels and foreign substance.

C. Furnish detergents, solvents, cleaning compounds, and tools required for cleaning operations.

D. Keep the premises free from accumulation of waste material or rubbish and at the completion of the work, remove from the job site tools, scaffolding, surplus materials, and rubbish, leaving the work areas "broom" clean.

3.11 STARTING OF EQUIPMENT

A. Testing or starting of equipment shall be done in collaboration with trades concerned to insure safe and proper operation of the equipment.

B. Prior to starting equipment, provide lubrication at required points. Before starting any electrical or electric motor driven equipment, a check must be made to insure that proper heater coils are installed in the starters and that the equipment is rotating in the proper direction.

3.12 OPERATIONAL TESTING

A. Operate systems until successful operation is demonstrated to the Engineer. This initial operation shall be in addition to the testing of the system and shall be done after the system is cleaned and finished.

Reviewed for Code Compliance
Inspections Division
Approved with Conditions
Date: 10/31/17

3.13 RECORD DRAWINGS

A. During construction, keep an accurate record of deviations to the installation of the work as indicated on the drawings. Upon completion of the work, furnish a copy of this record to the Engineer. **Submit record drawings before requesting final payment**.

3.14 MANUFACTURER'S REPRESENTATIVE

A. As indicated in the Technical Sections of this specification or as directed by the Engineer, provide the services of a factory trained Engineer or Technician to inspect, adjust, and place in proper operating condition the equipment or item involved. No additional compensation will be allowed for such service.

3.15 MANUFACTURER'S INSTRUCTIONS, OPERATION AND MAINTENANCE DATA

A. Provide for each item of equipment or apparatus furnished, a complete set of printed instructions obtained from the manufacturer covering proper operation, maintenance, lubrication, cleaning, servicing, adjustment, and safety instructions.

B. Manufacturer's data shall include performance data (curves are preferred where applicable) complete parts lists, recommended spare parts lists, piping, and wiring diagrams.

C. Arrange data in complete sets, properly indexed and marked.

D. Data shall include a complete set of shop drawings.

E. Material shall first be submitted in preliminary form for review by the Engineer. After review, submit two (2) copies in bound volumes to the Engineer for distribution.

3.16 GUARANTEES

A. An item becomes "defective" when it ceases to conform to the Contract Documents. Guarantees begin on the date of issuance of a certificate authorizing final payment or certificate of substantial completion with the Owner taking occupancy or beneficial use thereafter.

B. Upon completion of the work and before applying for final payment, furnish a written guarantee, stating that the work complies with the provisions of codes listed herein and the local enforcing authorities, and that it will be free from defects of material and workmanship for not less than one (1) year. Guarantee shall further state that the Contractor will, at his own expense, repair or replace any of his material and work which may become defective during the time of guarantee, together with other work damaged as a consequence of such defects.

C. Repeated malfunctioning or failure in service of any item or work of the system is sufficient cause for the Engineer to order the removal of the item, and its replacement with new item at the expense of the Contractor.

Reviewed for Code Compliance
Inspections Division
Approved with Conditions
Date: 10/31/17

3.17 FIRESTOPPING

A. Firestopping shall be performed in accordance with Specification Section 07841 "Firestopping". All penetrations of fire-rated assemblies including walls and floors by mechanical system components (piping, ductwork, conduits, etc.) shall be firestopped as specified.

* END OF SECTION *

Reviewed for Code Compliance
Inspections Division
Approved with Conditions
Date: 10/31/17

SECTION 230593

TESTING, ADJUSTING AND BALANCING FOR HVAC

PART 1 - GENERAL

1.1 DESCRIPTION: The work covered by this section of the specifications includes the furnishing of labor, materials, equipment, transportation, permits, inspections and incidentals and the performing of operations required for testing and balancing the total supply, return, exhaust and outside airflows and waterflows as indicated.

1.2 GENERAL REQUIREMENTS: The provisions of Section 230500 "Common Work Results for HVAC", apply to this section.

1.3 DEFINITIONS

A. Adjust: To regulate the specified fluid flow rate and air patterns at the terminal equipment, (e.g., reduce fan speed, throttling).

B. Balance: To proportion flows within the distribution system (submains, branches and terminals) in accordance with specified design quantities.

C. Procedure: Standardize approach and execution of sequence of work operations to yield reproducible results.

D. Report Forms: Test data sheets arranged for collection of test data in logical order to submission and review. This data should also form the permanent record which shall be used as the basis for any future testing, adjusting, and balancing required.

E. Test: To determine quantitative performance of equipment.

1.4 SUBMITTALS: Submit the following:

A. Standards Compliance:

Testing Agency
Testing Agency Personnel
Professional Engineers
Instrument Calibration

1.5 TESTING AND BALANCING AGENCY

A. Air Systems Testing and Balancing: Upon completion of the installation and field testing, performance test and adjust the supply, return, make-up and exhaust air systems, to provide the air volume and water flow quantities indicated. Accomplish work in accordance with the agenda and procedures specified and AABC 71679 and standards of the NEBB. Correct air and system performance deficiencies disclosed by the test before balancing the systems.

Reviewed for Code Compliance
Inspections Division
Approved with Conditions
Date: 10/31/17

B. Agency Qualifications: Obtain the services of a qualified testing organization to perform the testing and balancing work as herein specified. Prior to commencing work under this section of the specifications, the testing organization shall have been reviewed by the Engineer. The criteria for determining qualifications shall be membership in the AABC, or certification by the NEBB, or the testing organization shall have submitted proof to satisfy the Engineer that the organization meets or exceeds the technical standards for membership of the AABC as published in the AABC 71679. The testing organization shall be independent of both the installing contractors and equipment suppliers for this project.

1.6 AGENDA

A. Preliminary Report: Review drawings and specifications prior to installation of any of the affected system. Submit a written report to the Engineer indicating any deficiencies in the system that would preclude the proper adjusting, balancing, and testing of the systems.

1.7 PROCEDURES, GENERAL

A. Requirements: Adjust systems and components thereof that perform as required by drawings and specifications.

B. Test Duration: Operating tests of heating and cooling coils, fans and other equipment shall be of not less than 4 hours duration, after stabilized operating conditions have been established. Capacities shall be based on temperatures and air and water quantities measured during such tests.

C. Instrumentation: Method of application of instrumentation shall be in accordance with the manufacturer's instructions. Furnish personnel, instruments, and equipment for tests specified herein.

D. Accuracy of Instruments: Instruments used for measurements shall be accurate. Provide calibration histories for each instrument for examination. Calibrate each test instrument by an reviewed laboratory or by the manufacturer. The Engineer has the right to request instrument recalibration, or the use of other instruments and test methodology, where accuracy of readings is questionable.

E. Accuracy of Thermometers: Plus or minus one graduation at the temperatures to be measured. Graduations shall conform with the following schedule:

Medium	Design Temperature Differential (^oF)	Maximum Graduation (^oF)
Air	10 or less	1/2
Air	over 10	1

F. Flow Rate Tolerance: Values are based on discussion in ASHRAE "HVAC Applications", Chapter 34. Air filter resistance during tests, artificially imposed if necessary, shall be 80 percent of final values.

Reviewed for Code Compliance
Inspections Division
Approved with Conditions
Date: 10/31/17

1. Air Handling Unit CFM: Minus 0 percent to plus 10 percent.

2. Other Fans: Minus 0 percent to plus 10 percent.

3. Air Terminal Units (VAV Boxes): Minus 5 percent to plus 10 percent.

4. Minimum Outside Air (for manually set dampers): Minus 0 percent to plus 10 percent.

PART 2 - PRODUCTS

NOT USED

PART 3 - EXECUTION

3.1 WATER SYSTEM PROCEDURES

A. Adjustment: Adjust heating, water systems to provide required quantity to, or through each component.

B. Metering: Measure water quantities and pressures with calibrated meters.

C. Water Measurements and Balancing: Use venturi tubes, orifices, or other metering fittings and pressure gages. Adjust systems to provide the design flow rates through the heat transfer equipment prior to the capacity testing. Perform measurement of temperature differential with the air system, adjusted as described herein, in operation.

D. Automatic Controls: Position automatic control valves for full flow through the heat transfer equipment of the system during tests.

E. Flow: Flow through by-pass circuits at three-way valves shall be adjusted to balance that through the supply circuit.

F. Distribution: Adjust distribution by means of balancing devices (cocks, valves, and fittings) and automatic flow control valves. Do not use service valves for adjustment. Where automatic flow control valves are utilized in lieu of venturi tubes, record only the pressure drop across the valve if within the pressure drop rating on the valve tag.

G. Special Procedures: Where available, pump capacity (as designed) is less than total flow requirements of individual heat transfer units of system served, full flow may be simulated by the temporary restriction of flow to portions of the system.

3.2 CERTIFIED REPORTS

A. Submittal: Submit three copies of the reports described herein, covering air system performance, air motion (fpm), to the Engineer prior to final tests and inspection.

B. Instrument Records: Include types, serial numbers, and dates calibration of instruments.

Reviewed for Code Compliance
Inspections Division
Approved with Conditions
Date: 10/31/17

C. Reports: Reports shall identify conspicuously items not conforming to contract requirements, or obvious maloperation and deficiencies.

D. Certification: The reports shall be certified by an independent Registered Professional Engineer who is versed in the field of air balancing and who is not affiliated with any firm involved in the design or construction phases of the project.

3.3 WATER SYSTEM DATA

A. Report: Include data listed below:

1. Pumps:

a. Installation Data:

1) Manufacturer and Model
2) Size
3) Type Drive
4) Motor H.P., Voltage, Phase, and Full Load Amps.

b. Design Data:

1) G.P.M.
2) Head
3) R.P.M.
4) B.H.P. and Amps.

c. Recorded Data:

1) Discharge Pressures (Full-Flow and No-Flow)
2) Suction Pressures (Full-Flow and No-Flow)
3) Operating Head
4) Operating G.P.M. (from pump curves if metering is not provided)
5) No-Load Amps. (where possible)
6) Full-Flow Amps
7) No-Flow Amps

2. Air Heating and Cooling Equipment:

a. Design Data:

1) Load in Btu per hr
2) G.P.M.
3) Entering and Leaving Water Temperature
4) Entering and Leaving Air Conditions (D.B. and W.B.)
5) C.F.M.
6) Water Pressure Drop

Reviewed for Code Compliance
Inspections Division
Approved with Conditions
Date: 10/31/17

b. Recorded Data:

1) Type of Equipment and Identification (location or number designation)
2) Entering and Leaving Air Conditions (D.B. and W.B.)
3) Entering and Leaving Water Temperatures
4) G.P.M. (if metered)
5) Temperature Rise or Drop

3.4 FINAL TESTS, REVIEW, AND ACCEPTANCE

A. Capacity and Performance Tests: Make tests to demonstrate that capacities and general performance of air and water systems comply with contract requirements. A minimum of 10% of the TAB measurements shall be made in the presence of the CxA. The CxA shall determine the specific locations for the witnessing of tests.

B. Final Inspection: At the time of final review, recheck, in the presence of the Engineer, random selections of data air quantities and air motion recorded in the certified report.

C. Points and Areas for Recheck: As selected by the Engineer.

D. Measurement and Test Procedures: As reviewed for work forming basis of certified report.

E. Selections for Recheck (specific plus random): In general, selections for recheck will not exceed 25 percent of the total number tabulated in the report.

F. Retests: If random tests elicit a measured flow deviation of ten percent or more from, or a sound level of 2 Db or more, greater than that recorded in the certified report listings, at ten percent or more of the rechecked selections, the report shall be automatically rejected. In the event the report is rejected, systems shall be readjusted and tested, new data recorded, new certified reports submitted, and new inspection tests made.

G. Marking of Settings: Following final acceptance of certified reports by the Engineer, the settings of valves, dampers, and other adjustment devices shall be permanently marked, so that adjustment can be restored if disturbed at any time. Do not mark devices until after final review.

* END OF SECTION *

Reviewed for Code Compliance
Inspections Division
Approved with Conditions
Date: 10/31/17

SECTION 230700

INSULATION

PART 1 GENERAL

1.1 RELATED DOCUMENTS

A. The drawings and the specifications including Section 23 05 00 “Supplemental General Mechanical Conditions” are hereby made a part of the work of this section.

B. Drawings and general provisions of Contract including General and Supplementary Conditions and all Division 1 specification sections.

1.2 DESCRIPTION

A. The work covered by this Section of the specifications includes the furnishing of labor, materials, equipment, transportation, permits, inspections and incidentals and the performing of operations required to insulate the heating, ventilating and plumbing systems.

1.3 SUBMITTALS

A. Substitutions: Your attention is directed to Section 23 05 00-"Substitutions", relative to competition and the (ONLY) notation. Familiarity with this section shall be achieved before reading the PRODUCTS section of this specification.

B. The items for which the submittals paragraph in Section 23 05 00, Supplemental General Mechanical Requirements, apply are as follows:

1. Piping insulation.
2. Duct insulation.
3. Insulation application schedule.
4. Vapor barrier coating.

C. Section 01330 - Submittal Procedures: Submittal procedures.

D. Product Data: Submit data on product characteristics, performance criteria and limitations.

E. Manufacturer's Installation Instructions: Submit procedure for preparation and installation.

F. Manufacturer's Certificate: Certify products meet or exceed specified requirements.

1.5 DEFINITIONS

A. Finished Spaces: Spaces other than furred spaces, pipe and duct shafts, unheated spaces immediately below roof, spaces above ceilings, unexcavated spaces, crawl spaces, and tunnels, unless specifically listed below as an unfinished space.

Reviewed for Code Compliance
Inspections Division
Approved with Conditions
Date: 10/31/17

B. Unfinished Spaces: Mech/Elect Rooms and attic.

C. Unconditioned Spaces: Spaces exposed to near outside ambient temperatures (attic) and spaces not air conditioned.

C. Outside: Areas beyond the exterior side of walls or above the roof, unexcavated spaces, and crawl spaces.

D. Concealed: Not visible in finished or unfinished spaces. For example, above ceilings, below floors, between double walls, furred-in areas, pipe and duct shafts, and similar spaces.

E. Exposed: Visible from a finished or unfinished space.

1.6 MANUFACTURER'S STAMP OR LABEL

A. Packages or standard containers of insulation, jackets, cements, adhesives, and coatings delivered to the project site for use must have the manufacturer's stamp or label attached giving name of manufacturer, brand, and description of material. Insulation shall be asbestos-free.

1.7 FLAME SPREAD AND SMOKE DEVELOPED RATINGS

A. Materials shall have a flame-spread rating of not more than 25 and a smoke developed rating of not more than 50 when tested in accordance with NFPA 255, ASTM E84, or UL 723.

B. Provide materials with flame resistant treatments not subject to deterioration due to aging, moisture, high humidity, oxygen, ozone, or heat.

C. Materials Exempt From Fire-Resistant Rating: Nylon anchors for securing insulation to ducts or equipment.

PART 2 PRODUCTS

2.1 PIPING INSULATION

A. Fiberglass: Heavy density preformed fiberglass with thermal conductivity of 0.29 Btu-in/hr-ft^2-^{o}F at 150°F mean temperature. Insulation shall conform to ASTM C547 Class I and shall be suitable for 450°F service. Fitting insulation shall be of same material used for pipe.

1. Insulation Jacket: All service (ASJ) type conforming to Fed. Spec. HH-B-100B Type I. Jacket permeability shall not exceed 0.02 perms (ASTM E96). Pipe fitting jacket shall be factory premolded, one-piece, PVC covers with pressure sensitive taped joints. Jackets in exposed locations shall have a white surface suitable for field painting. Provide vapor barrier as required by service.

B. Flexible Unicellular: Flexible unicellular with thermal conductivity of 0.27 Btu-in/hr-ft^2-^{o}F at 75°F mean temperature. Insulation shall conform to ASTM C534, Type I, Tubular and shall be suitable for 200°F service. Fitting insulation shall be of same material used for pipe.

Reviewed for Code Compliance
Inspections Division
Approved with Conditions
Date: 10/31/17

Permeability shall not exceed 0.10 perms (ASTM E96). Insulation adhesive shall conform Mil. Spec. MIL-A-24179A, Type II, Class 1.

C. Fittings, Flanges, and Valves: Provide insulation for fittings, flanges, and valves premolded, precut, or job fabricated of the same thickness and conductivity as used on adjacent piping.

D. Insulation Kit: Insulate exposed supply and waste piping at handicapped accessible sinks with fully molded insulation kit. McGuire Products ProWrap, 3/16" thick closed vinyl with anti-microbial additive, 1.02 Btu-in/hr-F^2-^oF thermal conductivity, white color.

2.2 EQUIPMENT INSULATION

A. Fiberglass (Hot Equipment): Semi-rigid fiberglass board conforming to Fed. Spec. HH-I-558B, Form B, Type I. Thermal conductivity shall be 0.32 Btu-in/hr-ft^2-^oF at 150^oF mean temperature (ASTM C177), insulation shall be suitable for 650^oF service. Insulation jacket shall be "all service" type conforming to Fed. Spec. HH-I-100B Type I or II. Jacket permeability shall not exceed 0.02 perms (ASTM E96).

B. Flexible Unicellular (Cold Equipment): Flexible unicellular with thermal conductivity of 0.27 Btu-in/hr-ft^2-^oF at 75^oF mean temperature. Insulation shall conform to ASTM C534, Type II, sheet and shall be suitable for 200^oF service. Permeability shall not exceed 0.10 perms (ASTM E96). Insulation adhesive shall conform to Mil. Spec. MIL-A-24179A, Type II, Class 1.

2.3 DUCT INSULATION

A. Fiberglass (Ductwrap): Fiberglass duct wrap with foil-scrim-kraft facing/vapor barrier, 1.0 lb/cu.ft. density (0.75 lb/cu.ft. for 3" thickness only), 0.29 Btu-in/hr-ft2-oF conductivity at 75°F mean temperature, 0.05 permeance rating. Insulation shall meet the requirements of NFPA 90A & B and shall be UL rated. Provide foil-scrim-kraft (FSK) tape.

2.4 VAPOR BARRIER COATING

A. Raw (cut) ends of fiberglass pipe insulation shall be finished (protected) with the application of a suitable vapor barrier coating or finishing cement (mastic) to maintain the continuous visual and functional integrity of the insulation jacket. Mastic shall be Childers “Chil-Perm” CP-30, elastomeric resin, or approved equal, applied in accordance with the manufacturer’s recommendations.

PART 3 EXECUTION

3.1 SURFACE CONDITIONS

A. Inspection:

1. Prior to work of this Section, carefully inspect the installed work of other trades and verify that such work is complete to the point where this installation may properly commence.

Reviewed for Code Compliance
Inspections Division
Approved with Conditions
Date: 10/31/17

2. Verify that the insulation systems may be installed in accordance with pertinent codes and regulations and the reviewed Submittals.

3.2 GENERAL

A. Insulate after system tests have been completed and surfaces to be insulated have been cleaned of dirt, rust, and scale and are dry.

B. Install insulation with jackets drawn tight and cement down longitudinal and end laps. Do not use scrap pieces where a full length section will fit. Insulation shall be continuous through sleeves, wall and ceiling openings, except at fire dampers in duct systems and pipe penetrations through fire rated assemblies. Extend surface finishes to protect ends, and raw edges of insulation. Apply coatings and adhesives at the manufacturer's recommended coverage per gallon. Individually insulate piping and ductwork. Keep insulation dry during the application of the finish. Bevel and seal the edges of exposed insulation.

C. Unless otherwise indicated, do not insulate the following:

1. Factory pre-insulated flexible ductwork.
2. Factory pre-insulated ductwork, plenums, casings, mixing boxes, and filter boxes.
3. Chrome plated pipes and fire protection pipes.
4. Vibration isolating connections
5. Adjacent insulation
6. ASME stamps, nameplates, access plates
7. Ductwork exposed to view in a normally occupied space.
8. Hydronic specialties: Low water cutoff, relief valves, relief valve discharge piping, pressure reducing valves, and expansion tanks.
9. Unions and flanges at equipment required for frequent service.

3.3 PIPING INSULATION

A. Pipe Insulation (Fiberglass): Place sections of insulation around the pipe and joints, tightly butt into place. Draw jacket laps tight and smooth. Secure jacket with fire resistant adhesive, or factory applied self sealing lap. Cover circumferential joints with butt strips, not less than 3-inches wide, of material identical to the jacket material. Overlap longitudinal laps of jacket material not less than 1-1/2 inches. Adhesive used to secure the butt strip shall be the same as used to secure the jacket laps. Exposed fiberglass shall be coated with vapor barrier coating.

B. Flanges, Unions, Valves and Fittings Insulation (Fiberglass): Factory fabricated removable and reusable insulation covers. Place factory pre-molded, precut or field-fabricated segmented insulation of the same thickness and conductivity as the adjoining pipe insulation around the flange, union, valve, and fitting abutting the adjoining pipe insulation. Install factory premolded one-piece PVC fitting covers over the insulation and secure by stapling or with metal or plastic tacks made for securing PVC fitting covers and secure with PVC vapor barrier tape.

C. Pipe Insulation (Flexible Unicellular): Bond cuts, butt joints, ends, and longitudinal joints with adhesive. Miter 90-degree turns and elbows, tees, and valve insulation. Insulate flanges, unions, valves, and fittings.

Reviewed for Code Compliance
Inspections Division
Approved with Conditions
Date: 10/31/17

D. Where penetrating roofs and exterior walls, insulate piping to a point flush with the underside of the deck or wall and seal with a vapor barrier coating.

E. Hangers and Anchors: Pipe insulation shall be continuous through pipe hangers. Where pipe is supported by the insulation, provide MSS SP-58, Type 40 galvanized steel shields (16 gage maximum). For fiberglass insulation systems on pipe sizes 2 inches through 3", provide insulation inserts at points of hangers and supports. Insulation inserts shall be of molded glass fiber (minimum 12 pcf). Insulation inserts shall cover the bottom half of the pipe circumference, 180 degrees, and be not less than 4" long. Vapor-barrier facing of the insert shall be of the same material as the facing on the adjacent insulation. Seal inserts into the insulation. Insulation inserts for pipe sizes 4" and larger shall be welded pipe saddles. Install insulation in void area of saddle of same material used on adjacent insulation. For pipe sizes 2" and smaller, insulation inserts for flexible unicellular insulation systems shall be wooden doweling set on end of length equal to insulation thickness. Seal dowel to insulation with adhesive.

3.4 DUCT INSULATION

A. Rigid Insulation: Secure rigid insulation by impaling over pins or anchors located not more than 3 inches from joint edges of boards, spaced not more than 12 inches on centers and secure with washers and clips. Spot weld anchor pins or attach with a waterproof adhesive especially designed for use on metal surfaces. Each pin or anchor shall be capable of supporting a 20-pound load. Cut off protruding ends of pins. After installing washers, provide foil-scrim-kraft (FSK) tape to seal break in vapor barrier, tape shall extend 1" minimum around pin. Apply insulation with joints tightly butted. Bevel insulation around name plates and access plates and doors. Seal joints with FSK tape. Provide additional adhesive or staples to assist tape adhesion in difficult applications.

B. Flexible Blanket Insulation: Apply insulation with joints tightly butted. Staple laps of jacket with outward clinching staples and seal with foil scrim kraft (FSK) tape. Sagging of flexible duct insulation shall not be permitted. For ductwork over 24-inches wide on horizontal duct runs, provide pins, washers and clips. Install speed washers with pins and pin trimmed to washer. Cut off protruding ends of pins after clips are secured. Seal with FSK tape, extend tape 1" minimum around pin. Use pins on sides of vertical ductwork being insulated. Space pins and clips on 18 inch centers and not more than 18 inches from duct corners. Carry insulation over standing seams and trapeze-type hangers.

3.5 INSULATION APPLICATION SCHEDULE

SERVICE	THICKNESS	MATERIAL/JACKET
PIPING:		
Domestic Cold Water Piping		
1" and smaller	½”	Fiberglass w/ASJ or Flexible Unicellular
1¼" and larger	1"	Fiberglass w/ASJ or Flexible Unicellular

Reviewed for Code Compliance
Inspections Division
Approved with Conditions
Date: 10/31/17

SERVICE	THICKNESS	MATERIAL/JACKET
Domestic Hot Water Piping and Domestic Hot Water Recirculation Piping		
2" and smaller	1"	Fiberglass w/ASJ or Flexible Unicellular
2½" and larger	1½"	Fiberglass w/ASJ
Roof Drain Piping	1"	Fiberglass w/ASJ or Flexible Unicellular
Water and Drain Piping Under Handicap Accessible Fixtures		Insulation Kit (Truebro)
Condensate Drain Piping	½"	Flexible Unicellular
Refrigerant Piping	¾”	Flexible Unicellular
Refrigerant Piping (exterior)	¾”	Flexible Unicellular w/ PVC jacket
DUCTWORK:		
Exhaust Ductwork from a point three (3) feet interior of the motorized control damper or backdraft damper to the exterior wall, roof, or louver.	3"	Ductwrap, FSK
Supply Ductwork from the MAU & AC units to the Spaces Served (in conditioned spaces)	1½"	Ductwrap, FSK
Supply and Return / Exhaust Ductwork In unconditioned spaces (Such as Mechanical Rooms / Attics)	3"	Ductwrap, FSK
EQUIPMENT:		
Water Meter	1/2"	Flexible Unicellular
Backflow Preventers	1/2"	Flexible Unicellular
Valves	1"	Flexible Unicellular

Reviewed for Code Compliance
Inspections Division
Approved with Conditions
Date: 10/31/17

3.7 FIELD INSPECTION

A. Visually inspect to ensure that materials used conform to specifications. Inspect installations progressively for compliance with requirements.

* END OF SECTION *

Reviewed for Code Compliance
Inspections Division
Approved with Conditions
Date: 10/31/17

SECTION 230900

AUTOMATIC TEMPERATURE CONTROLS

PART 1 GENERAL

1.1 DESCRIPTION

A. The work covered by this Section of the specifications includes the furnishing of labor, materials, equipment, transportation, permits, inspections and incidentals and the performing of operations required to install the automatic temperature control system indicated. The system shall be An electric/electronic or direct digital control (DDC) system with touch-screen human interface panel or web-based access providing the sequences as described in these specifications or an electric/electronic control system. The ATC system shall be complete with required components including, low voltage and line voltage wiring and conduit. Wiring shall be in accordance with Division 16 of the specifications and NFPA 70, National Electrical Code.

B. The automatic temperature controls system shall be provided and installed by trained control mechanics regularly employed in the installation and calibration of ATC equipment.

1.2 ACCEPTABLE MANUFACTURERS / INSTALLERS

A. Maine Controls
B. Basix Automation / Andover
C. Siemens Industry, Scarborough, ME
D. Northeast Controls (Circon)
E. Honeywell Inc, Westbrook, ME
F. IB Controls (Delta / Johnson)
G. Taco iWorx
H. Johnson Controls Inc (JCI)
I. Reliable Controls
J. Distech Controls
K. Wisdom Controls

1.3 RELATED DOCUMENTS

A. The drawings and the specifications including Section 23 05 00 "Supplemental Mechanical General Requirements" and Section 26 00 00 “Electrical” are hereby made a part of the work of this section.

B. Drawings and general provisions of Contract including General and Supplementary Conditions and all Division 1 specification sections.

C. Coordinate with Section 01290 Price And Payment Procedures.

Reviewed for Code Compliance
Inspections Division
Approved with Conditions
Date: 10/31/17

1.4 SUBMITTALS

A. Substitutions: Your attention is directed to Section 23 05 00 relative to competition and the (ONLY) notation. Familiarity with this section shall be achieved before reading the PRODUCTS section of this specification.

B. The items for which the shop drawings paragraph in Section 23 05 00, Supplemental General Mechanical Requirements, apply are as follows:

1. Temperature control system schematic including variables, flow diagrams, ladder diagrams, and point to point wiring diagrams, indicating set points, reset ranges, throttling ranges, controller gains, differentials, operating ranges, normal positions, controller action, dial ranges, voltages, currents, mounting locations, indicators, and terminal strip points.

2. Sequence of operation for each system and function.

3. Generic, functional description of each control component indicated.

4. Equipment interlocks required by sequence of operation.

5. Automatic valve schedule showing flow, Cv, and pressure drop.

6. Manufacturer's Data:

a. Dampers, valves and operators.
b. Controllers, including wiring and connection diagrams.
c. Thermostats, temperature sensors, including wiring and connection diagrams.
d. Temperature and pressure indicators.
e. Pressure sensors, including wiring and connection diagrams.
f. Switches, relays, transmitters, transformers, including wiring and connection diagrams.

7. Human interface panel or web access with color graphics software data.

D. Section 01330 - Submittal Procedures: Submittal procedures.

E. Product Data: Submit data on product characteristics, performance criteria and limitations.

F. Manufacturer's Installation Instructions: Submit procedure for preparation and installation.

G. Manufacturer's Certificate: Certify products meet or exceed specified requirements.

1.5 WARRANTY

A. The automatic temperature control system shall have a **two (2) year parts and labor** warranty.

Reviewed for Code Compliance
Inspections Division
Approved with Conditions
Date: 10/31/17

PART 2 PRODUCTS

2.1 CONTROL PANELS

A. In general, relays, transformers, or other control devices (not including room thermostats or duct-mounted instruments) shall be grouped and mounted in a factory-built cabinet enclosure.

2.2 AUTOMATIC CONTROL DAMPERS

A. Automatic dampers not furnished with equipment shall be furnished under this paragraph. Automatic dampers shall be constructed and installed in accordance with the following specifications:

1. Damper Blades: All automatic dampers, including dampers for static pressure control, shall be of the balanced type, factory-fabricated, with fully gasketed galvanized steel airfoil blades, mounted in welded frames. Damper blades shall be not more than 8 inches wide, shall have interlocking edges, edge and jamb seals and be capable of operation against 4" static pressure differential. Dampers shall be Arrow "Arrow-Foil" Model PBDAF-206, OBDAF-207, Ruskin Model CD-60 or Tamco Series 1000.

2. Modulating Dampers: All modulating dampers shall be of the opposed blade type.

3. Damper Size and Bearings: Damper blades shall have steel trunnions mounted in oil-impregnated bearings. Dampers shall be not more than 48 inches in length between bearings.

4. Frames: Damper frames shall be of welded channel or angle-iron, with heavy steel corner gussets and braces or stiffened with steel tie-rods where necessary. Frames shall be painted with aluminum paint to prevent rusting.

5. Dampers shall be guaranteed to close tightly, and shall provide substantially the full area of the opening when open. All outdoor air intakes and all exhaust ducts to outside and all fresh air, return air and exhaust air dampers in systems shall have damper blades with inflatable seals or other devices to guarantee low leakage, not to exceed 4 CFM/SF at 1 in. WG pressure differential.

6. Damper Linkages: Damper-operating links shall be cadmium plated steel or brass rods, adjustable in length with ball and socket joints and of such proportions that they will withstand, without appreciable deflection, a load equal to not less than twice the maximum operating force of the damper motor. Linkages shall be concealed in the frame.

B. Damper Actuators: For each automatically controlled damper, a suitable damper actuator or actuators shall be provided in accordance with the following specifications:

Reviewed for Code Compliance
Inspections Division
Approved with Conditions
Date: 10/31/17

1. Actuator: Damper actuators shall be electronic, direct-coupled, spring-return type and have a rating of not less than twice the torque needed for actual operation of the damper.

2. Adjustments: Provide adjustable stops for the open and closed positions.

3. Mounting: Damper actuators shall be direct-coupled over the shaft. The damper actuators and mounting base shall not be mounted directly on cold or insulated ducts and casings, but shall be mounted outside the insulated covering in such a manner as to prevent sweating and interference with the insulation.

4. Where indicated, damper actuators shall be provided with an auxiliary switch rated at 120 V AC, and accept a 4 to 20 ma input.

2.3 SEQUENCE OF CONTROL

A. Provide and install all required components to enable the mechanical system to operate in the following sequences:

1. Hot Water Recirculation Pumps (CP-1 & 2): The pumps shall operate continuously.

2. Exhaust Fans:

   a. EF-1, 2, 3, 4 & 5 shall operate continuously unless shown with a thermostat on the drawings.

   b. EF-4 & 5 shown with a thermostat shall operate to maintain a cooling setpoint of 80F (adj).

   c. EF-P shall operate continuously. The speed shall be varied to maintain a negative pressure in the Pool area.

3. Electric Heaters (EWH & ECUH): Shall operate to satisfy the integral thermostat.

4. Packaged Heating and Air Conditioning Make-up Air (MAU-1):

   a. Fans: Supply fan shall operate continuously. The motorized damper shall open and end switch shall energize the fan.

   b. Cooling Coil: The DX cooling shall operate in stages as required to satisfy the discharge air setpoint.

   c. Gas Furnace: The gas furnace shall operate in stages or modulate as required to satisfy the discharge air setpoint.

   d. Freeze Protection: A manual reset freezestat shall shutdown the fans and close the outside air damper if the discharge air drops below 45°F.

Reviewed for Code Compliance
Inspections Division
Approved with Conditions
Date: 10/31/17

e. Motorized Dampers: Outside air motorized damper shall close upon unit shutdown.

f. Duct Smoke Detectors and Fire/Smoke Damper Actuation: Smoke detectors in the discharge and exhaust air shall de-energize the units, close the outside air dampers and close the fire/smoke dampers if smoke is detected. The smoke detectors shall be wired to interface with the building fire alarm system (by Electrical Contractor).

5. Combination Fire / Smoke Dampers: If smoke is detected by any of the duct smoke detectors at the MAU, the dampers shall close and that systems fans shall shut down and an alarm sent to the BAS. See Specifications Section 233000.

6. Packaged Terminal Air Conditioning Units (PTAC-1 & 2): A 7-day programmable wall-mounted thermostat shall cycle the fan and control the DX cooling and electric heat.

7. Pool Air Handler (PAH-1 & PCU-1):

   a. The Pool Environmental Unit shall operate continuously. The wall-mounted space temperature and humidity and pool water temperature sensors shall maintain the setpoint by cycling the motorized valve, compressor, and electric heating coil. A motorized damper in the outside air intake duct shall open when the unit is operating and be closed when the unit is off ("Occupied-Unoccupied cycle). Provide field wiring for all control components furnished by the manufacturer.

8. VRF & Multi-Split Air Conditioning Systems (FCs & ACCUs): The Multi-Split Air Conditioning systems shall operate from their own packaged controls. Provide and Coordinate the wiring requirements with the equipment manufacturer.

PART 3 EXECUTION

3.1 SURFACE CONDITIONS

A. Inspection:

1. Prior to work of this Section, carefully inspect the installed work of other trades and verify that such work is complete to the point where this installation may properly commence.

2. Verify that the automatic temperature control and system may be installed in strict accordance with pertinent codes and regulations and the reviewed Shop Drawings.

3.2 INSTALLATION

A. Provide wiring, and conduit to connect the ATC components for an operational ATC system. Wiring and installation shall conform to NFPA 70.

Reviewed for Code Compliance
Inspections Division
Approved with Conditions
Date: 10/31/17

B. Identification: Label or code each field wire at each end. Permanently label or code each point of field terminal strips to show the instrument or item served. Color-coded cable w annotated cable diagrams may be used to accomplish cable identification.

C. Temperature Sensors: Stabilize sensors to permit on-the-job installation that will require minimum field adjustment or calibration. Temperature sensor assemblies shall be readily accessible and adaptable to each type of application to allow quick, easy replacement and servicing without special tools or skills. Strap-on sensor mountings, using helical screw stainless steel clamps, shall be permitted on new piping for unit heater or other on-off operation only, after pipe is cleaned to bright metal. Strap-on bulb and pipe shall be insulated after installation. Strap-on sensor mountings are also permitted for hot water piping sizes up to 2 inches. Other liquid temperature sensors shall be provided with wells.

D. Duct Sensors: Provide sensors in ductwork; specific location within duct shall be selected to accurately sense air properties. Do not locate sensors in dead air spaces or positions obstructed by ducts or equipment. Installation shall be within the vibration and velocity limits of the sensing element. Where an extended surface element is required to sense the average or lowest air temperature, position and securely mount sensor within duct in accordance with sensor manufacturer's recommendations. Temperature sensing elements shall be thermally isolated from brackets and supports. Provide separate duct flange for each sensing element; securely seal ducts where elements or connections penetrate duct. Seal penetrations of duct insulation vapor barrier with vapor barrier coating compound to provide a vapor-tight covering. Mount sensor enclosures to allow easy removal and servicing without disturbance or removal of duct insulation or vapor barrier. On downstream side of each sensor, provide access doors.

E. Pipe Sensors: Provide wells for sensors measuring temperatures in pressure vessels or in pipes. Wells shall be noncorrosive to the medium being measured and shall have sufficient physical strength to withstand the working and test pressures and velocities. Locate wells to sense continuous flow conditions. Do not install wells using extension couplings. Where piping diameters are smaller than the length of the wells, provide wells in the piping at elbows to effect proper flow across the entire area of the well. Wells may either look upstream or downstream. Provide thermal transmission material within the well to speed the response of temperature measurement. Provide wells with sealing nuts to contain the thermal transmission material and allow for easy removal. Wells shall not restrict flow area to less than 70 percent of line-size-pipe normal flow area. Increase piping size as required to avoid restriction.

3.3 ADJUSTMENTS

A. Adjust controls and equipment to maintain the conditions indicated, to perform the functions indicated, and to operate in the sequence specified.

3.4 INSTRUCTING OPERATING PERSONNEL

A. Upon completion of the work and when designated by the Architect, furnish the services of a competent technician regularly employed by the temperature control manufacturer for the instruction of Owner in the operation and maintenance of each automatic space

Reviewed for Code Compliance
Inspections Division
Approved with Conditions
Date: 10/31/17

temperature control system. The period of instruction shall be for not less than one 8 ho period and shall include video tape demonstration of controllers.

3.5 FIELD INSPECTION AND TESTS

A. Tests shall be performed or supervised by employees of the ATC system or manufacturer of the ATC system, or by an authorized representative of the ATC manufacturer. Give Architect 14 calendar days advance written notice prior to the date of the field acceptance testing. If the Architect witnesses tests, such tests shall be subject to approval. If the Architect does not witness tests, provide performance certification.

B. Plan for Inspections and Tests: Furnish a written inspections and tests plan at least 60 days prior to the field acceptance test date. This plan shall be developed by the manufacturer of the ATC system. The plan shall delineate the inspections and testing procedures required for the ATC system to demonstrate compliance with the requirements specified. Additionally, the test plan shall indicate how ATC system is to be tested, what variables will be monitored during test, names of individuals performing tests, and what criteria for acceptance should be used. Indicate how operation of H&V system and ATC system in each seasonal condition will be simulated.

C. Field Acceptance Testing: Upon completion of 72 hours of continuous H&V and ATC systems operation and before final acceptance of work, test the automatic temperature control systems in service with the heating, ventilating and air conditioning systems to demonstrate compliance with contract requirements. Test controls through each cycle of operation, including simulation of each season insofar as possible. Test safety controls to demonstrate performance of required function. Adjust or repair defective or malfunctioning automatic space temperature control equipment or replace with new equipment. Repeat tests to demonstrate compliance with contract requirements.

* END OF SECTION *

Reviewed for Code Compliance
Inspections Division
Approved with Conditions
Date: 10/31/17

SECTION 233000

DUCTWORK AND ACCESSORIES

PART 1 GENERAL

1.1 RELATED DOCUMENTS

A. The drawings and the specifications including Section 23 05 00 "Supplemental Mechanical General Requirements" are hereby made a part of the work of this section.

B. Drawings and general provisions of Contract including General and Supplementary Conditions and all Division 1 specification sections.

C. Ductwork shall be protected from dirt and debris in accordance with SMACNA Standard “Duct Cleanliness for New Construction”.

1.2 DESCRIPTION OF WORK

A. The work covered by this Section of the specifications includes the furnishing of labor, materials, equipment, transportation, permits, inspections and incidentals and the performing of operations required to install the ductwork systems indicated.

1.3 SUBMITTALS

A. Substitutions: Your attention is directed to Section 23 05 00-"Substitutions", relative to competition and the (ONLY) notation. Familiarity with this section should be achieved before reading the PRODUCTS section of this specification.

B. The items for which the submittals paragraph in Section 23 05 00, Supplemental General Mechanical Requirements, apply are as follows:

1. Ductwork.
2. Ductwork accessories.
3. Firestopping materials and methods.
4. Ductwork sealing products.
5. Combination fire / smoke dampers.
6. Dryer vent louvers.
7. Louvers.
8. Grilles, registers and diffusers.

C. Section 01330 - Submittal Procedures: Submittal procedures.

D. Product Data: Submit data on product characteristics, performance criteria and limitations.

E. Manufacturer's Installation Instructions: Submit procedure for preparation and installation.

F. Manufacturer's Certificate: Certify products meet or exceed specified requirements.

Reviewed for Code Compliance
Inspections Division
Approved with Conditions
Date: 10/31/17

PART 2 PRODUCTS

2.1 DUCTWORK

A. Classification of Ductwork: Low pressure ductwork: up to 2" W.G. static pressure.

B. Materials: Unless otherwise indicated low pressure ductwork shall be galvanized steel. Galvanized sheet metal shall be new galvanized steel sheets of lock forming quality with zinc coating that will not flake or peel under forming operation.

C. Construction for Low Pressure Spiral Seam Round and Rectangular Ductwork:

1. Material: Galvanized steel conforming to ASTM A527, weight of galvanized coating shall be not less than 1-1/4 ounces total for both sides of one sq.ft. of a sheet. Construction, metal gage, and reinforcements shall conform with SMACNA "Duct Construction Standards" and NFPA 90A for 2" W.G. pressure class.

2. Fittings: Shall be constructed in accordance with SMACNA Standards and shall be of the types indicated (ONLY).

3. Longitudinal joints shall be Pittsburgh lockseam (ONLY). Button punch snap locks are not acceptable.

4. Joints shall be sealed to SMACNA seal class B.

D. Construction for Spiral Seam Round and Flat Oval Ductwork:

1. Exposed, double wall exterior ductwork and fittings above the roof shall be United McGill Uni-seal or Uni-rib, Eastern Sheetmetal, Lindab, Semco or Monroe Sheetmetal, galvanized steel, factory fabricated, spiral lockseam or welded longitudinal seam, round or flat oval type, as indicated. Seams shall be solid welded or spot-welded and factory sealed airtight. Ducts and fittings shall be specifically designed for medium pressure application. Round or flat oval ductwork indicated as acoustically lined or double-wall (DW) shall be United-McGill Acousti-K27, double wall medium pressure construction with solid 26 gauge sheetmetal inner liner and 3" thick fiberglass insulation (R8 minimum) for exterior ductwork and 1” thick insulation for interior ductwork. Ductwork and fittings shall be furnished with solid liners. Insulation shall be provided with thermal conductivity of 0.27 BTU/HR-^{o}F-FT^{2}-IN. Exposed exterior ductwork shall be double-wall construction (DW) with aluminum outer shell, sealed air and watertight, 3” thick (R-8) fiberglass insulation. Pool system ductwork shall be PVC or epoxy-coated (inside and out) galvanized spiral seam ductwork. The PVC coating shall be 4 mil thick.

a. Sheetmetal Gauges: Per SMACNA for listed pressure class.

b. Fittings: Fittings shall be machine formed type or welded multi-segment type. All seams shall be factory sealed or welded airtight. Tap offs shall be 90° conical type or 45° standard type, with smooth, machine formed entrance, designed for low pressure drop and low noise generation. 90° elbows shall be 5 piece construction (where space permits) or vaned type mitered elbow where space is restricted.

Reviewed for Code Compliance
Inspections Division
Approved with Conditions
Date: 10/31/17

Unless specifically indicated (and field-verified) as 5 piece construction, use var 90° elbows. Vanes shall be single thickness, solid-welded in place.

c. Joints on round spiral ductwork shall be slip type, coupling type, Van Stone flanges, or factory fabricated flange system type connectors, as standard with the manufacturer. Flat oval joints shall be Van Stone flanges (gasketed) or factory fabricated flange system type connectors. Joints shall be made up with joint sealer applied in strict accordance with the manufacturer's recommendations. Joint sealer shall be as recommended by the manufacturer.

d. Duct and fittings shall have been tested for air friction loss and leakage in an independent testing laboratory. Test results shall be submitted with the Shop Drawings for review.

e. External reinforcing angles shall be provided in accordance with the manufacturer's recommendations. External reinforcing angles shall be galvanized or painted with a rust inhibiting aluminum paint. Include reinforcing data with Shop Drawing submittal. Duct and reinforcing shall be designed for a positive static pressure of 6 inches of water gage.

f. No internal tie rod reinforcing will be allowed.

g. Hangers shall be of the clamp-on or trapeze type. Exposed ductwork shall use clamp-on hangers only. Holes shall not be drilled through the ducts.

2.2 DUCTWORK ACCESSORIES

A. Access Doors: Ruskin Model ADC2, 12"x12" size, 24 gauge galvanized steel, steel on both sides of door, foam gasket seals, 1" insulation, 2 cam locks, no hinge.

B. Backdraft Dampers (BDD): Ruskin Model CBD2 or American Warming and Ventilating aluminum frame and blades, extruded vinyl edge seals, field set at 0.10" W.G. pressure differential for full open operation.

C. Flexible Duct Connections: Ventfabrics, Inc. neoprene coated glass fabric. Provide flexible connections at all air handling equipment, e.g. ERV's, unless equipment is furnished with integral flexible connectors.

D. Drawbands for Flexible Ducts: Clinch type stainless steel with screwdriver adjustment, or nylon with lever action tightening tool provided by the drawband manufacturer.

E. Turning Vanes: (Low Pressure):

1. Solid blade, mounted with the long edge down stream in accordance with duct construction details indicated. Submit a 12"x12" sample elbow for review prior to fabrication.

F. Volume Dampers:

Reviewed for Code Compliance
Inspections Division
Approved with Conditions
Date: 10/31/17

1. Factory fabricated as specified, or shop fabricated in accordance with SMACNA "HVAC Duct Construction Standards".

2. Rectangular: Ruskin Model MD-35, or American Warming and Ventilating, 12 gauge galvanized steel, locking quadrant, opposed blade over 11", single blade 11" and under.

3. Round: Ruskin Model MDRS25, or American Warming and Ventilating, 20 gauge galvanized steel with locking quadrant(ONLY). Dampers may be provided integral with spin-in fittings.

G. Flexible Ductwork:

1. Low Pressure Duct Systems: Wiremold type WGCF, polyester core with wire helix, 2" thick (R-6 min.), 3/4 lb fiberglass insulation, polyolefin jacket/vapor barrier, 2" W.G. rated pressure.

H. Joint Sealer:

1. Hardcast Two-Part II DT tape with RTA-50 indoor/outdoor activator.

2. Hardcast Duct-Seal 321 water based indoor/outdoor sealant.

I. Dryer Vent Louvers (paintable): Nutone or Broan dryer vent louvered hood with backdraft damper.

J. Fire Dampers: Greenheck FD-series, Ruskin Model IBD2, or Cesco, dynamic rated, curtain type, 100% free area (ONLY), Style C for round duct installations, and Style B for rectangular duct applications. Fire dampers located immediately behind transfer grilles may be Style A dampers. The dampers shall be UL rated for 1-1/2 hours and have a 165°F fusible link. Fire dampers shall comply with UL “Standard for Safety” 555.

K. Acoustical duct liner for rectangular ductwork shall be Type AP Armaflex SA duct liner. The liner shall be elastomeric unicellular (closed cell) and have a thermal conductivity of 0.27 Btuh/^{0}F.-sf-in. and be cleanable and suitable for duct velocities of 4000 FPM. Duct liner thickness shall be 1" unless indicated otherwise. The installation shall include 100% coverage of the manufacturer’s recommended adhesive and protective Z-strips at all exposed upstream edges. Mechanical fasteners shall be used in addition to adhesive. Insulation shall comply with NFPA 90A and NFPA 90B and be approved by Factory Mutual. Duct dimension are net inside of liner.

L. Vents and Wall Caps (paintable): Nutone or Broan louvered hood with backdraft damper.

M. Louvers (L): Ruskin Model ELF6375DX, Greenheck, or American Warming and Ventilating. Extruded aluminum construction, 0.081" thick, aluminum extrusions, drainable blade, 1/2" expanded metal bird screen, size and performance as scheduled. AMCA certified leakage rate shall be a maximum of 0.02 ounces of water per square foot of free area at 1000 FPM free area velocity. Provide Kynar 500 finish, color selected by Architect. Provide frame styles compatible with building construction, see architectural details. Provide concealed

Reviewed for Code Compliance
Inspections Division
Approved with Conditions
Date: 10/31/17

architectural or standard visible mullions in multi-panel louver assemblies as indicated on drawings. Inactive / blanked-off louvers shall have a double wall sheetmetal closure on interior face of the louver. The closure shall have a 2" thickness of 1.5 pcf rigid fiberglass board insulation with a foil face. Both sides of the sheetmetal shall be painted flat black.

N. Flexible Ductwork:

1. Low Pressure Duct Systems: Wiremold type WGCF, polyester core with wire helix, 1-1/2" thick, 3/4 lb fiberglass insulation, polyolefin jacket/vapor barrier, 2" W.G. rated pressure. Maximum lengths shall be 2'-0".

2. Medium Pressure Duct Systems: Wiremold type WGC, polyester core with wire helix, 1-1/2" thick, 3/4 lb fiberglass insulation, polyolefin jacket/vapor barrier, 10" W.G. rated pressure (<12" size). Maximum lengths shall be 2'-0".

O. Clothesdryer Venting: Provide galvanized steel ductwork with cleanouts to terminal (no screen). Ductwork shall be galvanized steel, taped no screws.

2.3 COMBINATION FIRE & SMOKE DAMPERS

A. Combination fire / smoke dampers shall be Ruskin, Greenheck or equal, 1½ hour fire rating, with dynamic rating, UL555 listed.

B. Models shall be as follows (based on Ruskin):

1) FSD60 – Rectangular fire/smoke damper.
2) FSDR60 – Round fire/smoke damper.
3) FSD60GA – Rectangular fire/smoke damper w/ front access (at Corridor grilles).

C. Furnish with an integral 20 gauge insulated sleeve (full length through assembly) with break-away connections at both ends and a built-in access door (where applicable).

D. Damper shall be constructed of galvanized steel with airfoil blades. Sleeve type shall accommodate rectangular, round or flat oval ductwork, as required, with Class I leakage construction. Dampers shall have a 3000fpm velocity rating and a 4inwg static pressure rating.

E. Suitable access to smoke damper actuators is provided thru an access panel or the grille face depending on installation.

F. Installation shall be per the manufacturer's recommendations and the performance listing. Dampers shall be installed where indicated and at all duct penetrations thru fire-rated floor/ceiling/wall assemblies in accordance with IBC. Refer to Architectural drawings for coordination of ratings.

G. Actuator: Internally-mounted electric actuator, 24v (transformer required) or 120v wired in accordance with the NEC with end switch.

H. Activation (Smoke Detection): The damper shall be controlled by the duct smoke detector (provided by E.C.) located at the respective ERV. Upon activation of the duct smoke detector,

Reviewed for Code Compliance
Inspections Division
Approved with Conditions
Date: 10/31/17

all the smoke dampers shall close, and shutdown the ERVs. Smoke detectors shall connected to the building fire alarm system with addressable modules.

I. Units shall have integral testing switch with open/close damper position indicator.

2.4 AIR DEVICES (Krueger, Price, Metal Aire, Titus, Seiho) ONLY

A. Material and Finishes: Construct diffusers, registers, and grilles of steel, suitable for use with ceiling radiation dampers (CRD). Exterior and exposed edges shall be rolled, or otherwise stiffened and rounded. Steel parts shall be factory zinc-phosphate treated prior to priming and painting or have a baked-on enamel finish. Provide frame style compatible with ceiling or wall type. Colors shall be selected by Architect. Devices to be installed on exposed duct installations shall be furnished in primer suitable for field application of color coat.

B. Sound Pressure Level: Manufacturer certified sound pressure level rating of inlets and outlets in accordance with ADC 1062 R4. Conform with the permissible room sound pressure level for each device as scheduled.

C. Throw: Defined as distance from the diffuser, register, or grille to the point which the resultant room air velocity is 50 to 35 feet per minute.

D. Ceiling Diffusers: Equip with core styles required to provide air distribution pattern indicated. Internal parts shall be removable through the diffuser-neck for access to the duct and without the use of special tools. Construct each diffuser of four or more concentric elements designed to deliver air in a generally horizontal direction. The interior elements of square and rectangular ceiling diffusers may be square or rectangular as manufacturer's standard. Screws or bolts in exposed face of frames or core elements are not acceptable. Diffusers shall have an opposed blade volume damper in the diffuser neck. Diffusers shall have a 24"x24" lay-in panel for areas with acoustical ceilings and surface-mount frame for GWB ceilings

E. Grilles and Registers: Construction and finish as indicated, 1/2" louver spacing, 45° curved blade. Grilles and registers shall have opposed-blade volume dampers with lever adjuster. Unless otherwise indicated, registers shall be provided. Provide CRD’s at each rated ceiling penetration.

F. General: The interior of all sheetmetal connections to grilles, registers and diffusers shall be painted with a non-specular flat black paint so that no sheetmetal surfaces are visible from the finished space. All ceiling mounted registers, grilles and diffusers shall be provided with ceiling radiation dampers.

G. Variable Volume Diffuser: MetalAire MDC or approved equal. Provide with wall mounted thermostat control.

H. Ceiling radiation dampers (CRDs): Provided with grilles/diffusers from manufacturer where required. Inline duct mounted CRDs shall be Greenheck CRD-60, or equal, curtain type.

PART 3 EXECUTION

3.1 SURFACE CONDITIONS

Reviewed for Code Compliance
Inspections Division
Approved with Conditions
Date: 10/31/17

A. Inspection:

1. Prior to work of this Section, carefully inspect the installed work of other trades and verify that such work is complete to the point where this installation may properly commence.

2. Verify that the duct systems may be installed in accordance with pertinent codes and regulations and the reviewed Submittals.

3.2 INSTALLATION OF DUCTWORK AND AIR DEVICES

A. Provide and erect in accordance with the best practice of the trade ductwork shown on the drawings and as required to complete the intended installation. Make offsets as shown or required to place ductwork in proper position to avoid conflicts with other work and to allow the application of insulation and finish painting to the satisfaction of the Architect. Sizes given are "inside - clear" dimensions and not necessarily that of sheet metal. Ducts shall be arranged to adjust to "field conditions". The Sheet Metal trades shall coordinate his work with other trades. Work shall conform to ASHRAE duct construction recommendations, SMACNA "Duct Construction Standards", NFPA, and the requirements of MUBEC.

B. Joint Sealing: See PRODUCTS section.

C. Longitudinal joints: See PRODUCTS section.

D. Turns shall be made with long radius elbows or, if physically impossible to use long radius elbows, shall be square turns with specified turning vanes. CAUTION: Turns not conforming to this requirement shall be ordered removed and replaced with properly built turns.

E. Access Doors: Provide access doors for concealed apparatus requiring service and inspection in the duct system including but not limited to dampers, smoke detectors, sensors and motors, and upstream and downstream from duct coils.

F. Duct Sleeves and Prepared Openings: Install duct sleeves and prepared openings for duct mains, duct branches, and ducts passing through walls, roofs, and ceilings. Insure the proper size and location of sleeves and prepared openings. Allow one-inch clearance between duct and sleeve or one-inch clearance between insulation and sleeve for insulated ducts, except at grilles, registers, and diffusers.

G. Duct Supports: Unless otherwise indicated, provide one-inch wide by 16 gage galvanized steel sheet metal strips on each side of ducts. Anchor risers in the center of the vertical run to allow ends or riser free vertical movements. Attach supports only to structural framing members. Do not anchor supports to metal decking unless a means is provided (architectural review required) for preventing the anchors from puncturing the metal decking. Where supports are required between structural framing members, provide suitable intermediate metal framing. Where C clamps are used, use retainer clips.

Reviewed for Code Compliance
Inspections Division
Approved with Conditions
Date: 10/31/17

H. Flexible Collars and Connections: Provide flexible collars between fans and ducts or casin and where ducts are of dissimilar metals, as indicated or required. For round ducts, securely fasten flexible connections using stainless steel clinch-type draw-band. Nylon drawbands may be used if installed using the drawband manufacturer's lever-action tightening tool. For rectangular ducts, lock flexible connections to metal collars.

I. Flexible Ducts: Provide where indicated. No fiberglass shall be in contact with air flow. Flexible duct length shall not be more than 4'-0". Install with metal band hangers and without excess length, provide maximum extension of flex duct. Securely fasten flexible ducts to metal collars using a stainless steel or tool-tightened nylon drawband on the duct core and a second drawband on the insulation vapor barrier. If the duct exceeds 12 inches diameter, position the drawband behind a bead on the metal collar. Taping in lieu of drawbands is not allowed.

J. Any deviation in the duct system must be submitted as a shop drawing and stamped. CAUTION: Any deviation not submitted and favorably reviewed will be ordered removed from the system and replaced with that which is shown on the Drawings.

K. Discrepancies between actual field conditions and the Contract Documents shall be brought to the attention of the Architect prior to fabrication.

L. Field Changes to Ductwork: Field changes of ducts such as those required to suit the sizes of factory-fabricated equipment actually furnished shall be designed to minimize expansion and contraction. Use 4:1 transitions in field changes as well as modifications to connecting ducts.

M. Transitions with a slope greater than 4 to 1 shall be ordered removed from the system and replaced with a transition which meets this criteria.

N. Joints and seams at intake and exhaust plenums and joints on intake and exhaust ductwork for a distance of 3 feet from the plenum shall be sealed watertight on the bottom and side joints and seams.

O. Isolation dampers at intake and exhaust louvers and vent hoods shall be sealed to the ductwork to provide an airtight assembly with similar performance characteristics to the isolation damper.

P. Ductwork serving clothes dryers shall not have sheetmetal screws. All joints shall be taped with VentureTape 3520CW, 2.0-mil annealed aluminum foil tape with solvent acrylic pressure sensitive adhesive, UL 723 listed.

3.3 CLOSING IN WORK

A. Cover up or enclose work after it has been properly and completely tested and reviewed.

B. No additional cost to the Owner will be allowed for uncovering or recovering any work that is covered or enclosed prior to required test and review.

3.4 TEST AND ADJUST

Reviewed for Code Compliance
Inspections Division
Approved with Conditions
Date: 10/31/17

A. Before operating any system, the system shall be cleaned out to remove dust and foreign materials.

B. After the installation is complete and ready for operation, test the system under normal operating conditions in the presence of the Architect and demonstrate that the system functions as designed.

C. Correct defects which develop during the test period, conduct additional testing until defect free operation is achieved.

3.5 CLEANUP AND CORROSION PREVENTION

A. Ductwork and equipment shall be thoroughly cleaned. Dirt, dust, and debris shall be removed and the premises left in a clean and neat condition.

B. Before covering is applied to duct systems, clips, rods, clevises and other hanger attachments, and before uncovered piping is permitted to be concealed, corrosion and rust shall be wire brushed and cleaned and in the case of iron products, a coat of approved protective paint applied to these surfaces.

3.6 INSTRUCTIONS

A. On completion of the project, instruct the Owner's representative in the care and operation of the system. The total period of instruction shall not exceed four (4) hours. The time of instruction shall be arranged with the Owner. In addition to the prime Mechanical Contractor, the control system Contractor, Balancing Contractor, and Owner's representative shall be present and participate in the Owner's instruction.

3.7 FIRESTOPPING

A. Firestopping shall be performed in accordance with Specification Section 07841 “Firestopping”. All penetrations of fire-rated assemblies including walls and floors by mechanical system components (piping, ductwork, conduits, etc.) shall be firestopped as specified.

* END OF SECTION *

Reviewed for Code Compliance
Inspections Division
Approved with Conditions
Date: 10/31/17

SECTION 260000

GENERAL ELECTRICAL REQUIREMENTS

PART 1 GENERAL

1.01 SECTION INCLUDES

A. Basic Electrical Requirements specifically applicable to Divisions 26, 27 and 28 Sections.

1.02 REFERENCES

A. ANSI/NFPA 70 - National Electrical Code.

B. ANSI C2 - National Electrical Safety Code.

C. ANSI/NFPA 101 - Life Safety Code.

1.03 RELATED REQUIREMENTS

A. Conditions of the Contract and Division 1 - General Requirements, apply to all work, including work of this Division. Examine all contract documents for requirements affecting this work.

1.04 SUBMITTALS

A. Submit under provisions of Division 01.

B. Submit shop drawings and product data grouped to include complete submittals of related systems, products, and accessories in a single submittal.

C. Mark dimensions and values in units to match those specified.

D. Provide fixture schedule, lighting drawings, panelboard schedules and single line or risers diagram(s) to supplier for assistance in pricing as applicable. Contractor shall receive one set of black line drawings for reproduction from the engineer for this purpose.

1.05 REGULATORY REQUIREMENTS

A. Conform to applicable local, State and Federal Building Code for the State of Maine.

B. Electrical: Conform to NFPA 70, NFPA72, NFPA 99, NFPA 101, ANSI C2, 2 FM, UL, and applicable ASTM and ANSI Standards.

C. Contractor shall visit the site to become familiar with all existing conditions affecting this

Reviewed for Code Compliance
Inspections Division
Approved with Conditions
Date: 10/31/17

work. No claim shall be recognized for extra compensation due to failure of contractor to familiarize himself/herself with the conditions and extent of proposed work.

D. Obtain permits and request inspections by local authority having jurisdiction.

1.06 PROJECT/SITE CONDITIONS

A. Install Work in locations shown on Drawings, unless prevented by Project conditions.

B. Prepare drawings showing proposed rearrangement of Work to meet Project conditions, including changes to Work specified in other Sections. Obtain permission of Engineer before proceeding.

1.08 TEMPORARY LIGHT AND POWER

A. Temporary light and power shall be installed and maintained by the Electrical Contractor for use by all trades for the duration of construction complete with all wiring, switches, protective devices and similar equipment as may be required. Arrangement for the temporary service with the Power Company is the responsibility of the Electrical Contractor. Power bills will be paid by the General Contractor. Provide 120/208 volt or 120/240 volt 100 ampere, drop box similar to standard CMP detail 980-31.1.4. Provide 15-20 watt self ballasted compact fluorescent, lamps with plastic “cages” as needed. or 4 foot twin lamp (T8) fluorescent tamper-proof, gasketted and water-tight as required.

1.09 CONTRACT DRAWINGS AND SPECIFICATIONS

A. It is to be understood that drawings accompanying these specifications are intended to show general arrangement and extent of work to be done, but exact location and arrangement of all components shall be determined as work progresses. Anything shown on the drawings and not specifically mentioned in specifications or vice versa shall be considered as required in both.

B. Locations of equipment, and materials, etc., as given on drawings are approximate unless dimensioned. It shall be understood they are subject to such modifications as may be found necessary or desirable at time of installation in order to meet any structural conditions. Such changes shall be made by the contractor without extra charges.

C. Because of small scale drawings, all required offsets, etc., as may be required to clear work of other Contractors, may not be shown. Contractor, however, shall provide all necessary offsets, etc., as required to complete the installation of their work and not conflict with that of others.

D. It is the intention that wiring systems shall be complete and fully operational. The contractor shall identify system components during the bid process that clearly constitute conditions that would cause the system to be incomplete. Clarification: The remedy to these discrepancies shall be communicated by the engineer to all bidders or included as an addenda.

Reviewed for Code Compliance
Inspections Division
Approved with Conditions
Date: 10/31/17

1.10 MATERIALS AND LABOR

A. Bidders for this work shall carefully examine the Plans and Specifications, as the Contractor shall be required to furnish all materials and labor necessary to deliver to the Owner a complete system installed in full accordance with Local State and Federal laws. The system shall be furnished as specified, tested, and turned over to the Owner in perfect operating condition.

B. All materials shall be new and of best quality of their respective kinds. Workmanship in all respects shall be of highest grade and all construction shall be done according to best practices of the trade. Materials shall be warrantied directly by the manufacturer.

C. Contractor shall provide, when required for review of Engineer, labeled samples of any material or equipment specified herein or proposed to be used on this project.

D. Where words "furnish", "provide" or "install" are mentioned, either singly or in combination, these words are hereby interpreted to mean "furnish and install" or "provide and install," including all materials complete with all connections, supplemental devices, accessories and appurtenances, unless specifically otherwise noted. These words are likewise hereby interpreted as being prefixed to all materials, equipment, and apparatus hereinafter mentioned, either in abbreviated or schedule information.

1.11 PROTECTION OF WORK AND MATERIALS

A. Contractors shall be responsible for the care and protection of all materials delivered and labor performed until the completion of the work.

B. Cap all uncompleted lines, raceways, and ducts until ready for final connections, or future work as indicated.

C. All portions of the work liable to damage by weather or by those engaged on the project, must be securely protected by temporary, but substantial covering which must be maintained in position until Engineer authorizes removal.

1.12 REPLACEMENTS

A. In the event of damage to any equipment or materials, immediately make all repairs and replacements necessary to the approval of the Engineer at no additional cost to the Owner.

1.13 SAFETY REGULATIONS

A. All work to be performed and/or installed shall conform to all requirements of the Occupational Safety and Health Act (OSHA) of 1970 and all Amendments thereto.

1.14 INSURANCE

Reviewed for Code Compliance
Inspections Division
Approved with Conditions
Date: 10/31/17

A. The Contractor shall purchase and maintain all Workmen's Compensation Insurance, Publi Liability and Property Damage Insurance during the progress of the work and until completion and acceptance of the entire project by the Owner.

1.15 QUALITY ASSURANCE/CONTROL OF INSTALLATION

A. Monitor quality control over suppliers, manufacturers, Products, services, site conditions, and workmanship, to produce Work of specified quality.

B. Comply fully with manufacturers' instructions, including each step in sequence.

C. Should manufacturers' instructions conflict with Contract Documents, request clarification from Engineer before proceeding.

D. Comply with specified standards as a minimum quality for the Work except when more stringent tolerances, codes, or specified requirements indicate higher standards or more precise workmanship.

E. Perform work using persons qualified to produce workmanship of specified quality.

F. Secure Products in place with positive anchorage devices designed and sized to withstand stresses, vibration, and physical distortion or disfigurement.

1.16 SCHEDULE OF MATERIALS AND EQUIPMENT

A. As soon as practicable, and before commencement of installation of any material or equipment, a complete schedule of materials and equipment proposed for installation shall be submitted for review. Schedule shall also include a list of all proposed subcontractors. Partial or incomplete lists will not be considered. Any materials, fixtures, and equipment not conforming to specifications may be rejected. Also see Section 01300, Submittals.

B. Orders for purchase of any devices, material, conduit, etc., or other equipment shall not be placed until this schedule is reviewed.

1.17 UNDERWRITER'S APPROVALS

A. All electrical materials and equipment shall bear label of Underwriter's Laboratories, shall be listed by them in their list of electrical fittings and shall be approved by them for purpose for which they are to be used, unless materials and equipment are of a type for which Underwriter's Laboratories does not list or provide label service.

1.18 SUBSTITUTIONS

A. Where the specifications allow the substitution of a product for that which has been specified, said substitution must be reviewed by the Engineer and shall be equivalent in all respects to that which is specified. The Engineer's decision shall be obtained on all questions as follows, and his/her judgment shall be final and binding on all parties.

Reviewed for Code Compliance
Inspections Division
Approved with Conditions
Date: 10/31/17

B. Reference in the specifications or on the drawings to any product, material, fixture, form or type of construction, etc., by proprietary name, manufacturer, make or catalog number, shall be interpreted as establishing a standard of quality or design and shall not be construed as limiting competition. The Contractor may, at his/her option, use any fully equivalent substitute provided written review by the Engineer is first obtained indicating acceptance of the equality of the substitute preferred.

C. For materials or equipment which are supplied with integral or factory applied finish, the colors of same shall be considered in evaluating substitutions.

D. For the purpose of avoiding conflicts with other trades, contracts, and adjoining work where more than one (1) article, device, material, fixture, form or type of construction, etc., is referred to by proprietary name, manufacturer, make or catalog number, the first named shall be used as the basis of design and details. The cost of any changes of approved equivalent item shall be borne by the Contractor requesting such change.

1.19 RECORD DRAWINGS

A. During construction, the Contractor shall keep an accurate record of all deviations to the installation of the work as indicated on the drawings. Upon completion of the work, the Contractor shall furnish a copy of this record to the Engineer, on a black line of the original which will be available from the Engineer. Submit record drawings before requesting final payment.

1.20 MANUFACTURER'S REPRESENTATIVE

A. At appropriate times, or as directed by the Engineer, provide the services of a competent factory trained Engineer or Technician of the particular manufacturer of equipment or item involved, to inspect, adjust, and place in proper operating condition any and all such items of manufacture. No additional compensation shall be allowed Contractors for such service.

1.21 MANUFACTURERS' INSTRUCTIONS, AND OPERATION AND MAINTENANCE DATA

A. Provide for each item of equipment or apparatus furnished, a complete set of printed instructions obtained from the manufacturer covering proper operation, care, lubrication, cleaning, servicing, adjustment, etc., together with any special safety instructions.

B. Manufacturers' data shall further include performance data (time current curves, where applicable), complete parts lists, recommended spare parts lists, and wiring diagrams.

C. Data shall be arranged in complete sets, properly indexed and marked.

D. Data shall include complete set of shop drawings.

E. Material shall first be submitted in preliminary fashion for review by Engineer. After approval, Contractor shall submit two (2) copies in bound volumes to the Engineer for

Reviewed for Code Compliance
Inspections Division
Approved with Conditions
Date: 10/31/17

distribution.

F. Provide contacts for service agencies for all major system components.

1.22 GUARANTEES

A. An item becomes "defective" when it ceases to conform to this Contract Document. Guarantees beginning on the date of issuance of the Owner's final payment, or certificate of substantial completion, with Owner taking occupancy or beneficial use thereafter.

B. Upon completion of the work and before applying for final payment, furnish a written guarantee, stating that the work complies with the provisions of codes listed herein and the local enforcing authorities, and that it will be free from defects of material and workmanship for the required guarantee period. Guarantee shall further state that the Contractor will, at his own expense, repair and/or replace any of his material and work which may become defective during the time of guarantee, together with other work damaged as a consequence of such defects. All manufacturers written warranties shall apply to materials. Warranties other than that of the manufacturer are not acceptable.

C. The guarantee period shall be one (1) year except when longer periods are indicated for specific equipment.

D. All materials in Division 26 where a written warranty is published shall require the warranty to be offered by the product manufacturer.

1.23 EXISTING UTILITIES AND EQUIPMENT

A. Extreme care shall be taken to protect existing utilities and equipment above and below grade and in all other locations. Information contained on drawings is not guaranteed as to location, invert, etc. but represent the best information available as to the location of underground and concealed utilities and equipment. The Contractor shall be responsible for the replacement of all damaged or broken utilities or equipment due to their work or operations.

1.24 ENERGIZING EQUIPMENT

A. Obtain Owner’s written approval before energizing any equipment.

PART 2 PRODUCTS

Not used.

PART 3 EXECUTION

3.01 CONNECTION TO EQUIPMENT

A The Contractor shall be responsible for proper wiring and raceway connections to equipment, make sure of alignment, both initially and under operating conditions, and

Reviewed for Code Compliance
Inspections Division
Approved with Conditions
Date: 10/31/17

provide proper supports, brackets, means of expansion, etc., to make sure that no excessi stresses are applied to equipment. Raceways shall be run to the equipment and alignment checked before final bolting and fastening.

B At the request of the Engineer, dismantle equipment connections to demonstrate proper installation and make such corrections necessary without additional compensation for disassembly, re-connection, or the required corrective work.

C Equipment shall be installed in such a manner as to permit disconnecting for service and repairs without the necessity of rigging.

3.02 CLOSING IN UNINSPECTED WORK

A General: Do not cover up or enclose work until it has been properly and completely inspected and approved. Engineer may waive this requirement by written permission.

B Noncompliance: Should any of the work be covered up or enclosed prior to all required inspections and approvals, uncover the work as required, and after it has been completely inspected and approved, make all repairs and replacements with such materials as are necessary to the approval of the Engineer and at no additional cost to the Owner.

3.03 CLEANING OF SYSTEMS

A All wiring systems shall be thoroughly cleaned prior to initial operation and in accordance with manufacturer's instructions for equipment to be furnished and/or installed.

B Furnish all detergents, solvents, cleaning compounds, tools, etc., required in connection with cleaning operations.

C Thoroughly clean all exposed portions of all equipment, remove all labels, and wipe clean with a damp rag.

3.04 TESTING, BALANCING, AND ADJUSTING

A Electrical loads shall be balanced on all phase legs to a tolerance of plus or minus 10 percent. Include testing circuits for shorts to ground. Measure grounding system resistance. Correct all deficiencies. Provide all test equipment.

3.05 INSTRUCTIONS

A On completion of the job, Contractor shall provide competent technicians to thoroughly instruct the Owner's representative in the care and operation of the system. The total period of instruction shall not exceed 2 hours and be performed in a minimum of one interval. The time of instruction shall be arranged with the Owner. The Electrical subcontractor shall be present and participate in the Owner’s instruction.

3.06 FIRESTOPPING

Reviewed for Code Compliance
Inspections Division
Approved with Conditions
Date: 10/31/17

A Firestopping shall be performed in accordance with Specification Section “Firestopping”. AII penetrations of fire-rated assemblies including walls and floors by electrical system components (conduits, cables, trays, etc.) shall be firestopped as specified. Coordinate size, location and type of sleeves as required by firestopping systems.

*** END OF SECTION ***

Reviewed for Code Compliance
Inspections Division
Approved with Conditions
Date: 10/31/17

SECTION 260519

LOW-VOLTAGE ELECTRICAL POWER CONDUCTORS AND CABLES

PART 1 - GENERAL

1.1 RELATED DOCUMENTS

A. Drawings and general provisions of the Contract, including General and Supplementary Conditions and Division 01 Specification Sections, apply to this Section.

1.2 SUMMARY

A. Section Includes:

1. Building wires and cables rated 600 V and less.
2. Connectors, splices, and terminations rated 600 V and less.

1.3 ACTION SUBMITTALS

A. Product Data: For each type of product.

PART 2 - PRODUCTS

2.1 CONDUCTORS AND CABLES

A. Manufacturers: Subject to compliance with requirements, available manufacturers offering products that may be incorporated into the Work include, but are not limited to, the following:

1. General Cable Technologies Corporation.
2. Southwire Incorporated.
3. The Okonite Company.

B. Aluminum and Copper Conductors: Comply with NEMA WC 70/ICEA S-95-658.

C. Conductor Insulation: Comply with NEMA WC 70/ICEA S-95-658 for Type THHN-2-THWN-2.

D. Multiconductor Cable: Comply with NEMA WC 70/ICEA S-95-658 for Metal Clad cable, Type MC or SO cable.

Reviewed for Code Compliance
Inspections Division
Approved with Conditions
Date: 10/31/17

2.2 CONNECTORS AND SPLICES

A. Manufacturers: Subject to compliance with requirements, available manufacturers offering products that may be incorporated into the Work include, but are not limited to, the following:

1. AFC Cable Systems, Inc.
2. Gardner Bender.
3. Hubbell Power Systems, Inc.
4. Ideal Industries, Inc.
5. Ilsco; a branch of Bardes Corporation.
6. NSi Industries LLC.
7. O-Z/Gedney; a brand of the EGS Electrical Group.
8. 3M; Electrical Markets Division.
9. Tyco Electronics.

B. Description: Factory-fabricated connectors and splices of size, ampacity rating, material, type, and class for application and service indicated.

2.3 SYSTEM DESCRIPTION

A. Electrical Components, Devices, and Accessories: Listed and labeled as defined in NFPA 70, by a qualified testing agency, and marked for intended location and application.

B. Comply with NFPA 70.

PART 3 - EXECUTION

3.1 CONDUCTOR MATERIAL APPLICATIONS

A. Feeders: Copper for feeders smaller than No. 4 AWG; copper or aluminum for feeders No. 4 AWG and larger. All conductor sizes shown on drawings are for copper. Solid for No. 10 AWG and smaller; stranded for No. 8 AWG and larger.

B. Branch Circuits: Copper. Solid for No. 12 AWG and smaller; stranded for No. 10 AWG and larger.

3.2 CONDUCTOR INSULATION AND MULTICONDUCTOR CABLE APPLICATIONS AND WIRING METHODS

A. Feeders: Type THHN-2-THWN-2, single conductors in raceway.

B. Exposed Branch Circuits, Including in Crawlspaces: Type THHN-2-THWN-2, single conductors in raceway.

C. Branch Circuits Concealed in Ceilings, Walls, and Partitions: Metal Clad Cable, Type MC.

Reviewed for Code Compliance
Inspections Division
Approved with Conditions
Date: 10/31/17

D. Cord Drops and Portable Appliance Connections: Type SO, hard service cord with stainless-steel, wire-mesh, strain relief device at terminations to suit application.

3.3 INSTALLATION OF CONDUCTORS AND CABLES

A. Complete raceway installation between conductor and cable termination points according to Section "Raceways and Boxes for Electrical Systems" prior to pulling conductors and cables.

B. Use manufacturer-approved pulling compound or lubricant where necessary; compound used must not deteriorate conductor or insulation. Do not exceed manufacturer's recommended maximum pulling tensions and sidewall pressure values.

C. Use pulling means, including fish tape, cable, rope, and basket-weave wire/cable grips that will not damage cables or raceway.

D. Install exposed cables parallel and perpendicular to surfaces of exposed structural members, and follow surface contours where possible.

3.4 CONNECTIONS

A. Tighten electrical connectors and terminals according to manufacturer's published torque-tightening values. If manufacturer's torque values are not indicated, use those specified in UL.

B. Make splices, terminations, and taps that are compatible with conductor material.

C. Wiring at Outlets: Install conductor at each outlet, with at least 6 inches of slack.

3.5 IDENTIFICATION

A. Identify each spare conductor at each end with identity number and location of other end of conductor, and identify as spare conductor.

3.6 FIELD QUALITY CONTROL

A. Perform the following tests and inspections:

1. After installing conductors and cables and before electrical circuitry has been energized, test service entrance and feeder conductors for compliance with requirements.

B. Cables will be considered defective if they do not pass tests and inspections.

END OF SECTION 260519

Reviewed for Code Compliance
Inspections Division
Approved with Conditions
Date: 10/31/17

SECTION 260526

GROUNDING AND BONDING FOR ELECTRICAL SYSTEMS

PART 1 - GENERAL

1.1 RELATED DOCUMENTS

A. Drawings and general provisions of the Contract, including General and Supplementary Conditions and Division 01 Specification Sections, apply to this Section.

1.2 SUMMARY

A. Section Includes: Grounding systems and equipment.

B. Section includes grounding systems and equipment, plus the following special applications:

1. Underground distribution grounding.

1.3 ACTION SUBMITTALS

A. Product Data: For each type of product indicated.

1.4 QUALITY ASSURANCE

A. Electrical Components, Devices, and Accessories: Listed and labeled as defined in NFPA 70, by a qualified testing agency, and marked for intended location and application.

B. Comply with UL 467 for grounding and bonding materials and equipment.

PART 2 - PRODUCTS

2.1 CONDUCTORS

A. Insulated Conductors: Copper or tinned-copper wire or cable insulated for 600 V unless otherwise required by applicable Code or authorities having jurisdiction.

B. Bare Copper Conductors:

1. Solid Conductors: ASTM B 3.
2. Stranded Conductors: ASTM B 8.
3. Tinned Conductors: ASTM B 33.

Reviewed for Code Compliance
Inspections Division
Approved with Conditions
Date: 10/31/17

4. Bonding Cable: 28 kcmil, 14 strands of No. 17 AWG conductor, 1/4 inch (6 mm) diameter.
5. Bonding Conductor: No. 4 or No. 6 AWG, stranded conductor.
6. Bonding Jumper: Copper tape, braided conductors terminated with copper ferrules; 1-5/8 inches (41 mm) wide and 1/16 inch (1.6 mm) thick.
7. Tinned Bonding Jumper: Tinned-copper tape, braided conductors terminated with copper ferrules; 1-5/8 inches (41 mm) wide and 1/16 inch (1.6 mm) thick.

C. Grounding Bus: Predrilled rectangular bars of annealed copper, 1/4 by 4 inches (6.3 by 100 mm) in cross section, with 9/32-inch (7.14-mm) holes spaced 1-1/8 inches (28 mm) apart. Stand-off insulators for mounting shall comply with UL 891 for use in switchboards, 600 V. Lexan or PVC, impulse tested at 5000 V.

2.2 CONNECTORS

A. Listed and labeled by an NRTL acceptable to authorities having jurisdiction for applications in which used and for specific types, sizes, and combinations of conductors and other items connected.

B. Bolted Connectors for Conductors and Pipes: Copper or copper alloy, pressure type with at least two bolts.

1. Pipe Connectors: Clamp type, sized for pipe.

C. Welded Connectors: Exothermic-welding kits of types recommended by kit manufacturer for materials being joined and installation conditions.

D. Bus-bar Connectors: Mechanical type, cast silicon bronze, solderless compression-type wire terminals, and long-barrel, two-bolt connection to ground bus bar.

2.3 GROUNDING ELECTRODES

A. Ground Rods: Copper-clad steel; 3/4 inch by 10 feet.

1. Termination: Factory-attached No. 4/0 AWG bare conductor at least 48 inches (1200 mm) long.
2. Backfill Material: Electrode manufacturers recommended material.

PART 3 - EXECUTION

3.1 APPLICATIONS

A. Conductors: Install solid conductor for No. 8 AWG and smaller, and stranded conductors for No. 6 AWG and larger unless otherwise indicated.

Reviewed for Code Compliance
Inspections Division
Approved with Conditions
Date: 10/31/17

B. Underground Grounding Conductors: Install bare tinned-copper conductor, No. 2/0 AWG minimum.

1. Bury at least 24 inches (600 mm) below grade.
2. Duct-Bank Grounding Conductor: Bury 12 inches (300 mm) above duct bank when indicated as part of duct-bank installation.

C. Grounding Bus: Install in electrical and telephone equipment rooms, in rooms housing service equipment, and elsewhere as indicated.

1. Install bus on insulated spacers 2 inches (50 mm) minimum from wall, 6 inches (150 mm) above finished floor unless otherwise indicated.
2. Where indicated on both sides of doorways, route bus up to top of door frame, across top of doorway, and down to specified height above floor; connect to horizontal bus.

D. Conductor Terminations and Connections:

1. Pipe and Equipment Grounding Conductor Terminations: Bolted connectors.
2. Underground Connections: Welded connectors except at test wells and as otherwise indicated.
3. Connections to Ground Rods at Test Wells: Bolted connectors.
4. Connections to Structural Steel: Welded connectors.

3.2 GROUNDING UNDERGROUND DISTRIBUTION SYSTEM COMPONENTS

A. Comply with IEEE C2 grounding requirements.

A. Install insulated equipment grounding conductors with all feeders and branch circuits.

B. Air-Duct Equipment Circuits: Install insulated equipment grounding conductor to duct-mounted electrical devices operating at 120 V and more, including air cleaners, heaters, dampers, humidifiers, and other duct electrical equipment. Bond conductor to each unit and to air duct and connected metallic piping.

C. Water Heater, Heat-Tracing, and Antifrost Heating Cables: Install a separate insulated equipment grounding conductor to each electric water heater and heat-tracing cable. Bond conductor to heater units, piping, connected equipment, and components.

D. Metal Poles Supporting Outdoor Lighting Fixtures: Install grounding electrode and a separate insulated equipment grounding conductor in addition to grounding conductor installed with branch-circuit conductors.

3.4 INSTALLATION

A. Grounding Conductors: Route along shortest and straightest paths possible unless otherwise indicated or required by Code. Avoid obstructing access or placing conductors where they may be subjected to strain, impact, or damage.

Reviewed for Code Compliance
Inspections Division
Approved with Conditions
Date: 10/31/17

B. Ground Rods: Drive rods until tops are 2 inches (50 mm) below finished floor or final gra unless otherwise indicated.

1. Interconnect ground rods with grounding electrode conductor below grade and as otherwise indicated. Make connections without exposing steel or damaging coating if any.
2. For grounding electrode system, install at least three rods spaced at least one-rod length from each other and located at least the same distance from other grounding electrodes, and connect to the service grounding electrode conductor.

C. Bonding Straps and Jumpers: Install in locations accessible for inspection and maintenance except where routed through short lengths of conduit.

1. Bonding to Structure: Bond straps directly to basic structure, taking care not to penetrate any adjacent parts.
2. Bonding to Equipment Mounted on Vibration Isolation Hangers and Supports: Install bonding so vibration is not transmitted to rigidly mounted equipment.
3. Use exothermic-welded connectors for outdoor locations; if a disconnect-type connection is required, use a bolted clamp.

D. Grounding and Bonding for Piping:

1. Metal Water Service Pipe: Install insulated copper grounding conductors, in conduit, from building's main service equipment, or grounding bus, to main metal water service entrances to building. Connect grounding conductors to main metal water service pipes; use a bolted clamp connector or bolt a lug-type connector to a pipe flange by using one of the lug bolts of the flange. Where a dielectric main water fitting is installed, connect grounding conductor on street side of fitting. Bond metal grounding conductor conduit or sleeve to conductor at each end.
2. Water Meter Piping: Use braided-type bonding jumpers to electrically bypass water meters. Connect to pipe with a bolted connector.

E. Bonding Interior Metal Ducts: Bond metal air ducts to equipment grounding conductors of associated fans, blowers, electric heaters, and air cleaners. Install bonding jumper to bond across flexible duct connections to achieve continuity.

3.5 LABELING

A. Comply with requirements in Section 260553 "Identification for Electrical Systems" for instruction signs. The label or its text shall be green.

3.6 FIELD QUALITY CONTROL

A. Perform tests and inspections.

Reviewed for Code Compliance
Inspections Division
Approved with Conditions
Date: 10/31/17

1. Manufacturer's Field Service: Engage a factory-authorized service representative inspect components, assemblies, and equipment installations, including connections, and to assist in testing.

B. Tests and Inspections:

1. After installing grounding system but before permanent electrical circuits have been energized, test for compliance with requirements.
2. Inspect physical and mechanical condition. Verify tightness of accessible, bolted, electrical connections with a calibrated torque wrench according to manufacturer's written instructions.

C. Grounding system will be considered defective if it does not pass tests and inspections.

D. Prepare test and inspection reports.

E. Report measured ground resistances that exceed the following values:

1. Power and Lighting Equipment or System with Capacity of 500 kVA and less: 10 ohms.

F. Excessive Ground Resistance: If resistance to ground exceeds specified values, notify Architect promptly and include recommendations to reduce ground resistance.

END OF SECTION 260526

Reviewed for Code Compliance
Inspections Division
Approved with Conditions
Date: 10/31/17

SECTION 260533

RACEWAYS AND BOXES FOR ELECTRICAL SYSTEMS

PART 1 - GENERAL

1.1 RELATED DOCUMENTS

A. Drawings and general provisions of the Contract, including General and Supplementary Conditions and Division 01 Specification Sections, apply to this Section.

1.2 SUMMARY

A. Section Includes:

1. Metal conduits, tubing, and fittings.
2. Boxes, enclosures, and cabinets.

1.3 DEFINITIONS

A. GRC: Galvanized rigid steel conduit.

1.4 ACTION SUBMITTALS

A. Product Data: For surface raceways, wireways and fittings, floor boxes, hinged-cover enclosures, and cabinets.

PART 2 - PRODUCTS

2.1 METAL CONDUITS, TUBING, AND FITTINGS

A. Listing and Labeling: Metal conduits, tubing, and fittings shall be listed and labeled as defined in NFPA 70, by a qualified testing agency, and marked for intended location and application.

B. GRC: Comply with ANSI C80.1 and UL 6.

C. EMT: Comply with ANSI C80.3 and UL 797.

D. FMC: Comply with UL 1; zinc-coated steel or aluminum.

E. LFMC: Flexible steel conduit with PVC jacket and complying with UL 360.

F. Fittings for Metal Conduit: Comply with NEMA FB 1 and UL 514B.

Reviewed for Code Compliance
Inspections Division
Approved with Conditions
Date: 10/31/17

1. Fittings for EMT:

   a. Material: Steel or die cast.
   b. Type: Setscrew.

G. Joint Compound for GRC: Approved, as defined in NFPA 70, by authorities having jurisdiction for use in conduit assemblies, and compounded for use to lubricate and protect threaded conduit joints from corrosion and to enhance their conductivity.

2.2 BOXES, ENCLOSURES, AND CABINETS

A. General Requirements for Boxes, Enclosures, and Cabinets: Boxes, enclosures, and cabinets installed in wet locations shall be listed for use in wet locations.

B. Sheet Metal Outlet and Device Boxes: Comply with NEMA OS 1 and UL 514A.

C. Cast-Metal Outlet and Device Boxes: Comply with NEMA FB 1, aluminum, Type FD, with gasketed cover.

D. Metal Floor Boxes:

   1. Material: Cast metal.
   2. Type: Fully adjustable.
   3. Shape: Rectangular.
   4. Listing and Labeling: Metal floor boxes shall be listed and labeled as defined in NFPA 70, by a qualified testing agency, and marked for intended location and application.

E. Luminaire Outlet Boxes: Nonadjustable, designed for attachment of luminaire weighing 50 lb (23 kg). Outlet boxes designed for attachment of luminaires weighing more than 50 lb (23 kg) shall be listed and marked for the maximum allowable weight.

F. Small Sheet Metal Pull and Junction Boxes: NEMA OS 1.

G. Cast-Metal Access, Pull, and Junction Boxes: Comply with NEMA FB 1 and UL 1773, cast aluminum with gasketed cover.

H. Box extensions used to accommodate new building finishes shall be of same material as recessed box.

I. Device Box Dimensions: 4 inches square by 2-1/8 inches deep (100 mm square by 60 mm deep).

J. Gangable boxes are allowed.

K. Hinged-Cover Enclosures: Comply with UL 50 and NEMA 250, Type 3R with continuous-hinge cover with flush latch unless otherwise indicated.

   1. Metal Enclosures: Steel, finished inside and out with manufacturer's standard enamel.
   2. Interior Panels: Steel; all sides finished with manufacturer's standard enamel.

Reviewed for Code Compliance
Inspections Division
Approved with Conditions
Date: 10/31/17

PART 3 - EXECUTION

3.1 RACEWAY APPLICATION

A. Outdoors: Apply raceway products as specified below unless otherwise indicated:

1. Exposed Conduit: GRC.
2. Concealed Conduit, Aboveground: GRC.
3. Connection to Vibrating Equipment (Including Transformers and Hydraulic, Pneumatic, Electric Solenoid, or Motor-Driven Equipment): FMC.
4. Boxes and Enclosures, Aboveground: NEMA 250, Type 3R.

B. Indoors: Apply raceway products as specified below unless otherwise indicated:

1. Exposed: EMT.
2. Concealed in Ceilings and Interior Walls and Partitions: EMT.
3. Connection to Vibrating Equipment (Including Transformers and Hydraulic, Pneumatic, Electric Solenoid, or Motor-Driven Equipment): FMC, except use LFMC in damp or wet locations.
4. Damp or Wet Locations: GRC.
5. Boxes and Enclosures: NEMA 250, Type 1, except use NEMA 250, Type 4 stainless steel in damp or wet locations.

C. Minimum Raceway Size: 3/4-inch (21-mm) trade size.

D. Raceway Fittings: Compatible with raceways and suitable for use and location.

1. Rigid Steel Conduit: Use threaded rigid steel conduit fittings unless otherwise indicated. Comply with NEMA FB 2.10.
2. EMT: Use setscrew, steel fittings. Comply with NEMA FB 2.10.
3. Flexible Conduit: Use only fittings listed for use with flexible conduit. Comply with NEMA FB 2.20.

3.2 INSTALLATION

A. Comply with NECA 1 and NECA 101 for installation requirements except where requirements on Drawings or in this article are stricter. Comply with NECA 102 for aluminum conduits. Comply with NFPA 70 limitations for types of raceways allowed in specific occupancies and number of floors.

B. Keep raceways at least 6 inches (150 mm) away from parallel runs of flues and steam or hot-water pipes. Install horizontal raceway runs above water and steam piping.

C. Complete raceway installation before starting conductor installation.

D. Arrange stub-ups so curved portions of bends are not visible above finished slab.

Reviewed for Code Compliance
Inspections Division
Approved with Conditions
Date: 10/31/17

E. Install no more than the equivalent of three 90-degree bends in any conduit run except control wiring conduits, for which fewer bends are allowed. Support within 12 inches (300 mm) of changes in direction.

F. Conceal conduit and EMT within finished walls, ceilings, and floors unless otherwise indicated. Install conduits parallel or perpendicular to building lines.

G. Support conduit within 12 inches (300 mm) of enclosures to which attached.

H. Stub-ups to Above Recessed Ceilings:

1. Use EMT for raceways.
2. Use a conduit bushing or insulated fitting to terminate stub-ups not terminated in hubs or in an enclosure.

I. Threaded Conduit Joints, Exposed to Wet, Damp, Corrosive, or Outdoor Conditions: Apply listed compound to threads of raceway and fittings before making up joints. Follow compound manufacturer's written instructions.

J. Raceway Terminations at Locations Subject to Moisture or Vibration: Use insulating bushings to protect conductors including conductors smaller than No. 4 AWG.

K. Terminate threaded conduits into threaded hubs or with locknuts on inside and outside of boxes or cabinets. Install bushings on conduits up to 1-1/4-inch (35mm) trade size and insulated throat metal bushings on 1-1/2-inch (41-mm) trade size and larger conduits terminated with locknuts. Install insulated throat metal grounding bushings on service conduits.

L. Install raceways square to the enclosure and terminate at enclosures with locknuts. Install locknuts hand tight plus 1/4 turn more.

M. Do not rely on locknuts to penetrate nonconductive coatings on enclosures. Remove coatings in the locknut area prior to assembling conduit to enclosure to assure a continuous ground path.

N. Cut conduit perpendicular to the length. For conduits 2-inch (53-mm) trade size and larger, use roll cutter or a guide to make cut straight and perpendicular to the length.

O. Install pull wires in empty raceways. Use polypropylene or monofilament plastic line with not less than 200-lb (90-kg) tensile strength. Leave at least 12 inches (300 mm) of slack at each end of pull wire. Cap underground raceways designated as spare above grade alongside raceways in use.

P. Flexible Conduit Connections: Comply with NEMA RV 3. Use a maximum of 72 inches (1830 mm) of flexible conduit for equipment subject to vibration, noise transmission, or movement; and for transformers and motors.

1. Use LFMC in damp or wet locations subject to severe physical damage.

Reviewed for Code Compliance
Inspections Division
Approved with Conditions
Date: 10/31/17

Q. Mount boxes at heights indicated on Drawings. If mounting heights of boxes are individually indicated, give priority to ADA requirements. Install boxes with height measured to center of box unless otherwise indicated.

R. Horizontally separate boxes mounted on opposite sides of walls so they are not in the same vertical channel.

S. Locate boxes so that cover or plate will not span different building finishes.

T. Support boxes of three gangs or more from more than one side by spanning two framing members or mounting on brackets specifically designed for the purpose.

U. Fasten junction and pull boxes to or support from building structure. Do not support boxes by conduits.

V. Set metal floor boxes level and flush with finished floor surface.

3.3 INSTALLATION OF ELECTRICAL BOXES IN FIRE RATED WALLS

A. Outlet boxes on opposite sides of the wall shall be separated as follows:

1. By a horizontal distance of not less than 24 inches (610 mm);

2. By a horizontal distance of not less than the depth of the wall cavity where the wall cavity is filled with cellulose loose fill, rockwool or slag mineral wool insulation.

3. By protecting both outlet boxes by listed putty pads, 3M Catalog # MPP+ or equal.

B. Boxes exceeding 16 sq. in. (103 sq. cm) must be protected by listed putty pads, 3M Catalog # MPP+ or equal.

END OF SECTION 260533

Reviewed for Code Compliance
Inspections Division
Approved with Conditions
Date: 10/31/17

SECTION 260553

IDENTIFICATION FOR ELECTRICAL SYSTEMS

PART 1 - GENERAL

1.1 RELATED DOCUMENTS

A. Drawings and general provisions of the Contract, including General and Supplementary Conditions and Division 01 Specification Sections, apply to this Section.

1.2 SUMMARY

A. Section Includes:

1. Identification for raceways.
2. Identification of power and control cables.
3. Identification for conductors.
4. Underground-line warning tape.
5. Warning labels and signs.
6. Instruction signs.
7. Equipment identification labels.
8. Miscellaneous identification products.

1.3 ACTION SUBMITTALS

A. Product Data: For each electrical identification product indicated.

1.4 QUALITY ASSURANCE

A. Comply with ANSI A13.1.

B. Comply with NFPA 70.

C. Comply with 29 CFR 1910.144 and 29 CFR 1910.145.

D. Comply with ANSI Z535.4 for safety signs and labels.

E. Adhesive-attached labeling materials, including label stocks, laminating adhesives, and inks used by label printers, shall comply with UL 969.

Reviewed for Code Compliance
Inspections Division
Approved with Conditions
Date: 10/31/17

1.5 COORDINATION

A. Coordinate identification names, abbreviations, colors, and other features with requirements in other Sections requiring identification applications, Drawings, Shop Drawings, manufacturer's wiring diagrams, and the Operation and Maintenance Manual; and with those required by codes, standards, and 29 CFR 1910.145. Use consistent designations throughout Project.

B. Coordinate installation of identifying devices with completion of covering and painting of surfaces where devices are to be applied.

C. Coordinate installation of identifying devices with location of access panels and doors.

D. Install identifying devices before installing acoustical ceilings and similar concealment.

PART 2 - PRODUCTS

2.1 POWER AND CONTROL RACEWAY IDENTIFICATION MATERIALS

A. Comply with ANSI A13.1 for minimum size of letters for legend and for minimum length of color field for each raceway size.

B. Colors for Raceways Carrying Circuits at 600 V or Less:

1. Black letters on an white field.
2. Legend: Indicate voltage.

C. Vinyl Labels for Raceways Carrying Circuits at 600 V or Less: Preprinted, flexible label laminated with a clear, weather- and chemical-resistant coating and matching wraparound clear adhesive tape for securing ends of legend label.

D. Snap-Around Labels for Raceways Carrying Circuits at 600 V or Less: Slit, pretensioned, flexible, preprinted, color-coded acrylic sleeve, with diameter sized to suit diameter of raceway or cable it identifies and to stay in place by gripping action.

E. Snap-Around, Color-Coding Bands for Raceways Carrying Circuits at 600 V or Less: Slit, pretensioned, flexible, solid-colored acrylic sleeve, 2 inches (50 mm) long, with diameter sized to suit diameter of raceway or cable it identifies and to stay in place by gripping action.

F. Tape and Stencil for Raceways Carrying Circuits More Than 600 V: 4-inch- (100-mm-) wide black stripes on 10-inch (250-mm) centers diagonally over orange background that extends full length of raceway or duct and is 12 inches (300 mm) wide. Stop stripes at legends.

2.2 ARMORED AND METAL-CLAD CABLE IDENTIFICATION MATERIALS

A. Comply with ANSI A13.1 for minimum size of letters for legend and for minimum length of color field for each cable size.

Reviewed for Code Compliance
Inspections Division
Approved with Conditions
Date: 10/31/17

B. Colors for Cables Carrying Circuits at 600 V and Less:

1. Black letters on an white field.
2. Legend: Indicate voltage.

C. Vinyl Labels: Preprinted, flexible label laminated with a clear, weather- and chemical-resistant coating and matching wraparound clear adhesive tape for securing ends of legend label.

D. Self-Adhesive Vinyl Tape: Colored, heavy duty, waterproof, fade resistant; 2 inches (50 mm) wide; compounded for outdoor use.

E. Heat-Shrink Preprinted Tubes: Flame-retardant polyolefin tube with machine-printed identification label. Sized to suit diameter of and shrinks to fit firmly around cable it identifies. Full shrink recovery at a maximum of 200 deg F (93 deg C). Comply with UL 224.

2.3 POWER AND CONTROL CABLE IDENTIFICATION MATERIALS

A. Comply with ANSI A13.1 for minimum size of letters for legend and for minimum length of color field for each cable size.

B. Vinyl Labels: Preprinted, flexible label laminated with a clear, weather- and chemical-resistant coating and matching wraparound clear adhesive tape for securing ends of legend label.

C. Self-Adhesive, Self-Laminating Polyester Labels: Preprinted, 3-mil- (0.08-mm-) thick flexible label with acrylic pressure-sensitive adhesive that provides a clear, weather- and chemical-resistant, self-laminating, protective shield over the legend. Labels sized to fit the cable diameter such that the clear shield overlaps the entire printed legend.

D. Heat-Shrink Preprinted Tubes: Flame-retardant polyolefin tube with machine-printed identification label. Sized to suit diameter of and shrinks to fit firmly around cable it identifies. Full shrink recovery at a maximum of 200 deg F (93 deg C). Comply with UL 224.

2.4 UNDERGROUND-LINE WARNING TAPE

A. Tape:

1. Recommended by manufacturer for the method of installation and suitable to identify and locate underground electrical and communications utility lines.
2. Printing on tape shall be permanent and shall not be damaged by burial operations.
3. Tape material and ink shall be chemically inert, and not subject to degrading when exposed to acids, alkalis, and other destructive substances commonly found in soils.

B. Color and Printing:

1. Comply with ANSI Z535.1 through ANSI Z535.5.
2. Inscriptions for Red-Colored Tapes: ELECTRIC LINE.

Reviewed for Code Compliance
Inspections Division
Approved with Conditions
Date: 10/31/17

3. Inscriptions for Orange-Colored Tapes: TELEPHONE CABLE, CATV CAB COMMUNICATIONS CABLE.

2.5 WARNING LABELS AND SIGNS

A. Comply with NFPA 70 and 29 CFR 1910.145.

B. Self-Adhesive Warning Labels: Factory-printed, multicolor, pressure-sensitive adhesive labels, configured for display on front cover, door, or other access to equipment unless otherwise indicated.

C. Baked-Enamel Warning Signs:

1. Preprinted aluminum signs, punched or drilled for fasteners, with colors, legend, and size required for application.
2. 1/4-inch (6.4-mm) grommets in corners for mounting.
3. Nominal size, 7 by 10 inches (180 by 250 mm).

D. Warning label and sign shall include, but are not limited to, the following legends:

1. Multiple Power Source Warning: "DANGER - ELECTRICAL SHOCK HAZARD - EQUIPMENT HAS MULTIPLE POWER SOURCES."
2. Workspace Clearance Warning: "WARNING - OSHA REGULATION - AREA IN FRONT OF ELECTRICAL EQUIPMENT MUST BE KEPT CLEAR FOR 36 INCHES (915 MM)."

2.6 INSTRUCTION SIGNS

A. Engraved, laminated acrylic or melamine plastic, minimum 1/16 inch (1.6 mm) thick for signs up to 20 sq. inches (129 sq. cm) and 1/8 inch (3.2 mm) thick for larger sizes.

1. Engraved legend with black letters on white face.
2. Punched or drilled for mechanical fasteners.
3. Framed with mitered acrylic molding and arranged for attachment at applicable equipment.

B. Adhesive Film Label: Machine printed, in black, by thermal transfer or equivalent process. Minimum letter height shall be 3/8 inch (10 mm).

2.7 EQUIPMENT IDENTIFICATION LABELS

A. Adhesive Film Label: Machine printed, in black, by thermal transfer or equivalent process. Minimum letter height shall be 3/8 inch (10 mm).

B. Self-Adhesive, Engraved, Laminated Acrylic or Melamine Label: Adhesive backed, with white letters on a dark-gray background. Minimum letter height shall be 3/8 inch (10 mm).

Reviewed for Code Compliance
Inspections Division
Approved with Conditions
Date: 10/31/17

C. Engraved, Laminated Acrylic or Melamine Label: Punched or drilled for screw mounti White letters on a dark-gray background. Minimum letter height shall be 3/8 inch (10 mm).

2.8 MISCELLANEOUS IDENTIFICATION PRODUCTS

A. Paint: Comply with requirements in painting Sections for paint materials and application requirements. Select paint system applicable for surface material and location (exterior or interior).

B. Fasteners for Labels and Signs: Self-tapping, stainless-steel screws or stainless-steel machine screws with nuts and flat and lock washers.

PART 3 - EXECUTION

3.1 INSTALLATION

A. Verify identity of each item before installing identification products.

B. Location: Install identification materials and devices at locations for most convenient viewing without interference with operation and maintenance of equipment.

C. Apply identification devices to surfaces that require finish after completing finish work.

D. Self-Adhesive Identification Products: Clean surfaces before application, using materials and methods recommended by manufacturer of identification device.

E. Underground-Line Warning Tape: During backfilling of trenches install continuous underground-line warning tape directly above line at 6 to 8 inches (150 to 200 mm) below finished grade. Use multiple tapes where width of multiple lines installed in a common trench exceeds 16 inches (400 mm) overall.

3.2 IDENTIFICATION SCHEDULE

A. Accessible Raceways and Metal-Clad Cables, 600 V or Less, for Service, Feeder, and Branch Circuits More Than 30 A, and 120 V to ground: Identify with self-adhesive vinyl label. Install labels at 30-foot (10-m) maximum intervals.

B. Power-Circuit Conductor Identification, 600 V or Less: For conductors in vaults, pull and junction boxes, manholes, and handholes, use color-coding conductor tape to identify the phase.

1. Color-Coding for Phase Identification, 600 V or Less: Use colors listed below for ungrounded feeder and service conductors.

a. Color shall be factory applied or field applied for sizes larger than No. 8 AWG, if authorities having jurisdiction permit.

Reviewed for Code Compliance
Inspections Division
Approved with Conditions
Date: 10/31/17

b. Colors for 208/120-V Circuits:

1) Phase A: Black.
2) Phase B: Red.
3) Phase C: Blue.

C. Install instructional sign including the color-code for grounded and ungrounded conductors using adhesive-film-type labels.

D. Control-Circuit Conductor Identification: For conductors and cables in pull and junction boxes, and handholes, use self-adhesive vinyl labels with the conductor or cable designation, origin, and destination.

E. Control-Circuit Conductor Termination Identification: For identification at terminations provide self-adhesive vinyl labels with the conductor designation.

F. Auxiliary Electrical Systems Conductor Identification: Identify field-installed alarm, control, and signal connections.

1. Identify conductors, cables, and terminals in enclosures and at junctions, terminals, and pull points. Identify by system and circuit designation.
2. Use system of marker tape designations that is uniform and consistent with system used by manufacturer for factory-installed connections.
3. Coordinate identification with Project Drawings, manufacturer's wiring diagrams, and the Operation and Maintenance Manual.

G. Locations of Underground Lines: Identify with underground-line warning tape for power, lighting, communication, and control wiring.

1. Install underground-line warning tape for both direct-buried cables and cables in raceway.

H. Warning Labels for Indoor Cabinets, Boxes, and Enclosures for Power and Lighting: Self-adhesive warning labels.

1. Comply with 29 CFR 1910.145.
2. Identify system voltage with black letters on an orange background.
3. Apply to exterior of door, cover, or other access.
4. For equipment with multiple power or control sources, apply to door or cover of equipment including, but not limited to, the following:

a. Power transfer switches.
b. Controls with external control power connections.

I. Operating Instruction Signs: Install instruction signs to facilitate proper operation and maintenance of electrical systems and items to which they connect. Install instruction signs with approved legend where instructions are needed for system or equipment operation.

Reviewed for Code Compliance
Inspections Division
Approved with Conditions
Date: 10/31/17

J. Equipment Identification Labels: On each unit of equipment, install unique designation la that is consistent with wiring diagrams, schedules, and the Operation and Maintenance Manual. Apply labels to disconnect switches and protection equipment, central or master units, control panels, control stations, terminal cabinets, and racks of each system. Systems include power, lighting, control, communication, signal, monitoring, and alarm systems unless equipment is provided with its own identification.

1. Labeling Instructions:

   a. Indoor Equipment: Self-adhesive, engraved, laminated acrylic or melamine label. Unless otherwise indicated, provide a single line of text with 1/2-inch- (13-mm-) high letters on 1-1/2-inch- (38-mm-) high label; where two lines of text are required, use labels 2 inches (50 mm) high.
   b. Outdoor Equipment: Engraved, laminated acrylic or melamine label.
   c. Elevated Components: Increase sizes of labels and letters to those appropriate for viewing from the floor.
   d. Unless provided with self-adhesive means of attachment, fasten labels with appropriate mechanical fasteners that do not change the NEMA or NRTL rating of the enclosure.

2. Equipment to Be Labeled:

   a. Panelboards: Typewritten directory of circuits in the location provided by panelboard manufacturer. Panelboard identification shall be self-adhesive, engraved, laminated acrylic or melamine label.
   b. Enclosures and electrical cabinets.
   c. Access doors and panels for concealed electrical items.
   d. Enclosed switches.
   e. Enclosed circuit breakers.
   f. Enclosed controllers.
   g. Variable-speed controllers.
   h. Push-button stations.
   i. Contactors.
   j. Remote-controlled switches, dimmer modules, and control devices.

END OF SECTION 260553

Reviewed for Code Compliance
Inspections Division
Approved with Conditions
Date: 10/31/17

SECTION 260924

LIGHTING CONTROL DEVICES

PART 1 – GENERAL

1.1 SUMMARY

A. Section Includes:

1. Wall box mounted, wall/corner mounted, and ceiling mounted occupancy sensors including dual technology, ultrasonic, and passive infrared technologies. This includes self contained PIR sensors as well as low voltage sensors that work with Switchpacks.

B. Related Sections:

1. Section 265100 – Interior Lighting.

1.2 REFERENCES

A. American National Standards Institute/Institute of Electrical and Electronic Engineers (ANSI/IEEE)

1. C62.41-1991 – Recommended Practice for Surge Voltages in Low Voltage AC Power Circuits.

B. ASTM International (ASTM)

1. D4674 -02a Standard Test Method for Accelerated Testing for Color Stability of Plastics Exposed to Indoor Fluorescent Lighting and Window-Filtered Daylight.

C. National Electrical Manufacturers Association (NEMA)

1. WD1 (R2005) - General Color Requirements for Wiring Devices.

D. Underwriters Laboratories, Inc. (UL):

1. 94 – Flammability Rating
2. 916 – Energy Management Equipment.
3. 508 (2005) - Standard for Industrial Control Equipment.
4. 244A – Appliance Controls

1.3 SYSTEM DESCRIPTION

A. Permanently installed

1. Wall switch occupancy sensors
2. Ceiling mounted occupancy sensors

1.4 SUBMITTALS

A. Submit under provisions of Section 013300.

B. Specification Conformance Document: Indicate whether the submitted equipment:

1. Meets specification exactly as stated.
2. Meets specification via an alternate means and indicate the specific methodology used.

C. Shop Drawings; include:

1. Load schedule indicating actual connected load, load type, and voltage per circuit, circuits and their respective control zones, circuits that are on emergency, and capacity, phase, and corresponding circuit numbers.
2. Schematic of system.

Reviewed for Code Compliance
Inspections Division
Approved with Conditions
Date: 10/31/17

3. Lighting plan clearly marking product type, location and orientation of each sensor.

D. Product Data: Catalog specification sheets with performance specifications demonstrating compliance with specified requirements.

1.5 QUALITY ASSURANCE

A. Manufacturer: Minimum 20 years' experience in manufacture of occupancy sensor lighting controls.

B. Manufacturer's Quality System: Registered to ISO 9001:2000 Quality Standards, including in-house engineering for product design activities.

C. Occupancy Sensing Lighting Controls:

1. Listed by UL specifically for the required loads. Provide evidence of compliance upon request.

D. Installer Qualifications: Installer shall be one who is experienced in performing the work of this section, and who has specialized in installation of work similar to that required for this project.

E. Source Limitations: To assure compatibility, obtain occupancy sensors from a single source with complete responsibility over all lighting controls, including accessory products. The use of subcontracted component assemblers is not acceptable.

1.6 PROJECT CONDITIONS

A. Do not install equipment until following conditions can be maintained in spaces to receive equipment:

1. Ambient temperature: 0° to 40° C (32° to 104° F).
2. Relative humidity: Maximum 90 percent, non-condensing.
3. Occupancy Sensors must be protected from dust during installation.

1.7 WARRANTY

A. Provide manufacturer's 5-year parts warranty.

1.8 MAINTENANCE

A. Make ordering of new equipment for expansions, replacements, and spare parts available to end user.

B. Make new replacement parts available for minimum of ten years from date of manufacture.

C. Provide factory direct technical support.

PART 2- PRODUCTS

2.1 MANUFACTURERS

A. Acceptable Manufacturer: Eaton Lighting Systems (formerly Cooper Controls)

B. Substitutions: Allowed under provisions of Division 1.

2.2 SENSOR PERFORMANCE REQUIREMENTS

A. Sensing mechanism:

1. Infrared: Utilize multiple segmented lens, with internal grooves to eliminate dust and residue

Reviewed for Code Compliance
Inspections Division
Approved with Conditions
Date: 10/31/17

build-up.

2. Dual technology:
   a. Utilize multiple segmented lens, with internal grooves to eliminate dust and residue build-up.
   b. Utilize an operating frequency of 32 kHz or 40 kHz that shall be crystal controlled to operate within plus or minus 0.005% tolerance.
   c. Incorporate Doppler shift ultrasonic and passive infrared motion detection technologies. Products that react to noise or ambient sound shall not be considered.

B. Power failure memory:
   1. Controls incorporate non-volatile memory. Should power be interrupted and subsequently restored, settings and parameters saved in protected memory shall not be lost.

C. Designed and tested to withstand discharges without impairment of performance when subjected to discharges of 15,000 volts per IEC 801-2.

D. Products tested in identical manner, complaint to NEMA WD 7 -2011 Occupancy Motion Sensors Standards.

E. Sensor shall have time delays from 10 to 30 min.

F. When specified, sensors shall automatically adjust time delay and sensitivity settings.

G. All sensors shall provide an LED as a visual means of indication at all times to verify that motion is being detected during both testing and normal operation.

H. All sensors shall have readily accessible, user adjustable settings for time delay and sensitivity. Settings shall be located on the sensor (not the control unit) and shall be recessed to limit tampering.

I. Where specified, sensor shall have an internal additional isolated relay with Normally Open, Normally Closed, and Common outputs for use with HVAC control, Data Logging and other control options. Sensors utilizing separate components or specially modified units to achieve this function are not acceptable.

2.3 LINE VOLTAGE CEILING MOUNTED OCCUPANCY SENSORS

A. Product: OAC-DT-2000-MV, OAC-DT-2000-DMV

B. Provide all necessary mounting hardware and instructions.

C. Capable of detection of occupancy at desktop level up to 300 square feet, and gross motion up to 1000 square feet

D. Shall accommodate loads from 0-800 watts at 120 volts; 0 to 1200 watts at 277 volts and shall have 180 degree coverage capability.

E. Shall be able to have their visible plastic parts replaced, for color changes in the field, without removing the body of the control from the wall and without requiring special tools.

F. Shall utilize Zero Crossing Circuitry which increases relay life, protects from the effects of inrush current, and increases sensor’s longevity.

G. Shall have no leakage current to load, in manual or in Auto/Off Mode for safety purposes and shall have voltage drop protection.

H. Where specified, dual relay sensors shall offer daylighting foot-candle adjustment control for either or both relays.

2.4 OCCUPANCY WALL SWITCHES

A. Product: OSW-P-0451-MV-*, ONW-P-1001-MV-*, ONW-P-1001-347-*, ONW-P-1001-DMV-*, ONW-

Reviewed for Code Compliance
Inspections Division
Approved with Conditions
Date: 10/31/17

P-1001-D347-*, ONW-P-1001-SP-*, ONW-P-1001-RR7-*

B. Capable of detection of occupancy at desktop level up to 300 square feet, and gross motion up to 1000 square feet

C. Shall accommodate loads from 0-800 watts at 120 volts; 0 to 1200 watts at 277 volts and shall have 180 degree coverage capability.

D. Shall be able to have their visible plastic parts replaced, for color changes in the field, without removing the body of the control from the wall and without requiring special tools.

E. Shall utilize Zero Crossing Circuitry which increases relay life, protects from the effects of inrush current, and increases sensor's longevity.

F. Shall have no leakage current to load, in manual or in Auto/Off Mode for safety purposes and shall have voltage drop protection.

G. Where specified, wall switch sensors shall provide a field selectable option to convert sensor operation from Automatic On to Manual On.

H. Where specified, dual relay sensors shall offer daylighting footcandle adjustment control for either or both relays.

2.5 SOURCE QUALITY CONTROL

A. Perform full-function testing on 100% of all system components and panel assemblies at the factory.

PART 3- EXECUTION

3.1 INSTALLATION

A. Install equipment in accordance with manufacturer's installation instructions.

B. Provide complete installation of system in accordance with Contract Documents.

C. Provide equipment at locations and in quantities indicated on Drawings. Provide any additional equipment required to provide control intent.

3.2 TESTING

A. Upon completion of all wiring and after all fixtures are installed and lamped, a representative shall check the installation prior to energizing the system. Each installed occupancy sensor shall be tested in the Test Mode to see that lights turn OFF and on based on occupancy.

B. At the time testing, the owner's representative shall be thoroughly instructed in the proper operation of the system.

END OF SECTION

Reviewed for Code Compliance
Inspections Division
Approved with Conditions
Date: 10/31/17

SECTION 261900

SUPPORTING DEVICES

PART 1 GENERAL

1.01 WORK INCLUDED

A. Conduit and equipment supports.

B. Fastening hardware.

1.02 RELATED WORK

A. Drawings and general provisions of the Contract, including General and Supplementary Conditions and Division 01 Specification Sections, apply to this Section.

PART 2 PRODUCTS

2.01 MATERIAL

A. Support Channel: Galvanized or painted steel.

B. Hardware: Corrosion resistant.

PART 3 EXECUTION

3.01 INSTALLATION

A. Install products in accordance with manufacturer's instructions.

B. Fasten hanger rods, conduit clamps, and outlet and junction boxes to building structure using pre-cast insert system, expansion anchors, beam clamps.

C. Anchors and Fasteners

1) Concrete Structural Elements: Use pre-cast insert system, expansion anchors, powder actuated anchors and preset inserts.
2) Steel Structural Elements: Use beam clamps, steel ramset fasteners, and welded fasteners.
3) Concrete Surfaces: Use self-drilling anchors and expansion anchors.
4) Hollow Masonry, Plaster, and Gypsum Board Partitions: Use toggle bolts and hollow wall fasteners.
5) Solid Masonry Walls: Use expansion anchors and preset inserts.
6) Sheet Metal: Use sheet metal screws.
7) Wood Elements: Use wood screws.

Reviewed for Code Compliance
Inspections Division
Approved with Conditions
Date: 10/31/17

D. Do not fasten supports to piping, ductwork, mechanical equipment, or conduit.

E. Do not use power-actuated anchors.

F. Do not drill structural steel members.

G. Fabricate supports or trapeze hangers from structural steel or steel channel, rigidly welded or bolted to present a neat appearance. Use hexagon head bolts with spring lock washers under all nuts.

H. In wet locations install free-standing electrical equipment on concrete pads.

I. Install surface-mounted cabinets and panelboards with minimum of four anchors. Provide steel channel supports to stand cabinet one inch off wall.

*** END OF SECTION ***

Reviewed for Code Compliance
Inspections Division
Approved with Conditions
Date: 10/31/17

SECTION 262726

WIRING DEVICES

PART 1 - GENERAL

1.1 RELATED DOCUMENTS

A. Drawings and general provisions of the Contract, including General and Supplementary Conditions and Division 01 Specification Sections, apply to this Section.

1.2 SUMMARY

A. Section Includes:

1. Receptacles, receptacles with integral GFCI, and associated device plates.
2. Weather-resistant receptacles.
3. Snap switches and wall-box dimmers.
4. Cord and plug sets.

1.3 DEFINITIONS

A. EMI: Electromagnetic interference.

B. GFCI: Ground-fault circuit interrupter.

C. Pigtail: Short lead used to connect a device to a branch-circuit conductor.

D. RFI: Radio-frequency interference.

E. TVSS: Transient voltage surge suppressor.

F. UTP: Unshielded twisted pair.

1.4 ADMINISTRATIVE REQUIREMENTS

A. Coordination:

1. Receptacles for Owner-Furnished Equipment: Match plug configurations.
2. Cord and Plug Sets: Match equipment requirements.

1.5 ACTION SUBMITTALS

A. Product Data: For each type of product.

Reviewed for Code Compliance
Inspections Division
Approved with Conditions
Date: 10/31/17

1.6 INFORMATIONAL SUBMITTALS

A. Field quality-control reports.

PART 2 - PRODUCTS

2.1 MANUFACTURERS

A. Manufacturers' Names: Shortened versions (shown in parentheses) of the following manufacturers' names are used in other Part 2 articles:

1. Cooper Wiring Devices; Division of Cooper Industries, Inc. (Cooper).
2. Hubbell Incorporated; Wiring Device-Kellems (Hubbell).
3. Leviton Mfg. Company Inc. (Leviton).
4. Pass & Seymour/Legrand (Pass & Seymour).

B. Source Limitations: Obtain each type of wiring device and associated wall plate from single source from single manufacturer.

2.2 GENERAL WIRING-DEVICE REQUIREMENTS

A. Wiring Devices, Components, and Accessories: Listed and labeled as defined in NFPA 70, by a qualified testing agency, and marked for intended location and application.

B. Comply with NFPA 70.

C. Devices that are manufactured for use with modular plug-in connectors may be substituted under the following conditions:

1. Connectors shall comply with UL 2459 and shall be made with stranding building wire.
2. Devices shall comply with the requirements in this Section.

2.3 STRAIGHT-BLADE RECEPTACLES

A. Convenience Receptacles, 125 V, 20 A: Comply with NEMA WD 1, NEMA WD 6 Configuration 5-20R, UL 498, and FS W-C-596.

1. Products: Subject to compliance with requirements, available products that may be incorporated into the Work include, but are not limited to, the following:

2.4 GFCI RECEPTACLES

A. General Description:

1. Straight blade, non-feed-through type.

Reviewed for Code Compliance
Inspections Division
Approved with Conditions
Date: 10/31/17

2. Comply with NEMA WD 1, NEMA WD 6, UL 498, UL 943 Class A, and FS W-C-596.
3. Include indicator light that shows when the GFCI has malfunctioned and no longer provides proper GFCI protection.

B. Duplex GFCI Convenience Receptacles, 125 V, 20 A:

1. Products: Subject to compliance with requirements, available products that may be incorporated into the Work include, but are not limited to, the following:

2.5 CORD AND PLUG SETS

A. Description:

1. Match voltage and current ratings and number of conductors to requirements of equipment being connected.
2. Cord: Rubber-insulated, stranded-copper conductors, with Type SOW-A jacket; with green-insulated grounding conductor and ampacity of at least 130 percent of the equipment rating.
3. Plug: Nylon body and integral cable-clamping jaws. Match cord and receptacle type for connection.

2.6 TOGGLE SWITCHES

A. Comply with NEMA WD 1, UL 20, and FS W-S-896.

B. Switches, 120/277 V, 20 A:

1. Products: Subject to compliance with requirements, available products that may be incorporated into the Work include, but are not limited to, the following:

2.7 WALL-BOX DIMMERS

A. Control: Continuously adjustable slider; with single-pole or three-way switching. Comply with UL 1472.

2.8 WALL PLATES

A. Single and combination types shall match corresponding wiring devices.
1. Plate-Securing Screws: Metal with head color to match plate finish.
2. Material for Finished Spaces: Smooth, high-impact thermoplastic.
3. Material for Unfinished Spaces: Galvanized steel.
4. Material for Damp Locations: Cast aluminum with spring-loaded lift cover, and listed and labeled for use in wet and damp locations.

B. Wet-Location, Weatherproof Cover Plates: NEMA 250, complying with Type 3R, weather-resistant, die-cast aluminum with lockable cover.

Reviewed for Code Compliance
Inspections Division
Approved with Conditions
Date: 10/31/17

2.9 FLOOR SERVICE FITTINGS

A. Type: Modular, flush-type, dual-service units suitable for wiring method used.

B. Compartments: Barrier separates power from voice and data communication cabling.

C. Service Plate: Round, die-cast aluminum with satin finish.

D. Power Receptacle: NEMA WD 6 Configuration 5-20R, gray finish, unless otherwise indicated.

E. Voice and Data Communication Outlet: Two modular, keyed, color-coded, RJ-45 jacks for UTP cable complying with requirements in Section 271500 "Communications Horizontal Cabling."

2.10 FINISHES

A. Device Color:

1. Wiring Devices Connected to Normal Power System: As selected by Architect unless otherwise indicated or required by NFPA 70 or device listing.

PART 3 - EXECUTION

3.1 INSTALLATION

A. Comply with NECA 1, including mounting heights listed in that standard, unless otherwise indicated.

B. Coordination with Other Trades:

1. Protect installed devices and their boxes. Do not place wall finish materials over device boxes and do not cut holes for boxes with routers that are guided by riding against outside of boxes.
2. Keep outlet boxes free of plaster, drywall joint compound, mortar, cement, concrete, dust, paint, and other material that may contaminate the raceway system, conductors, and cables.
3. Install device boxes in brick or block walls so that the cover plate does not cross a joint unless the joint is troweled flush with the face of the wall.
4. Install wiring devices after all wall preparation, including painting, is complete.

C. Conductors:

1. Do not strip insulation from conductors until right before they are spliced or terminated on devices.
2. Strip insulation evenly around the conductor using tools designed for the purpose. Avoid scoring or nicking of solid wire or cutting strands from stranded wire.
3. The length of free conductors at outlets for devices shall meet provisions of NFPA 70, Article 300, without pigtails.

Reviewed for Code Compliance
Inspections Division
Approved with Conditions
Date: 10/31/17

D. Device Installation:

1. Replace devices that have been in temporary use during construction and that were installed before building finishing operations were complete.
2. Keep each wiring device in its package or otherwise protected until it is time to connect conductors.
3. Do not remove surface protection, such as plastic film and smudge covers, until the last possible moment.
4. Connect devices to branch circuits using pigtails that are not less than 6 inches (152 mm) in length.
5. When there is a choice, use side wiring with binding-head screw terminals. Wrap solid conductor tightly clockwise, two-thirds to three-fourths of the way around terminal screw.
6. Use a torque screwdriver when a torque is recommended or required by manufacturer.
7. When conductors larger than No. 12 AWG are installed on 15- or 20-A circuits, splice No. 12 AWG pigtails for device connections.
8. Tighten unused terminal screws on the device.
9. When mounting into metal boxes, remove the fiber or plastic washers used to hold device-mounting screws in yokes, allowing metal-to-metal contact.

E. Receptacle Orientation:

1. Install ground pin of vertically mounted receptacles down, and on horizontally mounted receptacles to the right.

F. Device Plates: Do not use oversized or extra-deep plates. Repair wall finishes and remount outlet boxes when standard device plates do not fit flush or do not cover rough wall opening.

G. Dimmers:

1. Install dimmers within terms of their listing.
2. Install unshared neutral conductors on line and load side of dimmers according to manufacturers' device listing conditions in the written instructions.

H. Arrangement of Devices: Unless otherwise indicated, mount flush, with long dimension vertical and with grounding terminal of receptacles on top. Group adjacent switches under single, multigang wall plates.

I. Adjust locations of floor service outlets and service poles to suit arrangement of partitions and furnishings.

3.2 GFCI RECEPTACLES

A. Install non-feed-through-type GFCI receptacles where protection of downstream receptacles is not required.

Reviewed for Code Compliance
Inspections Division
Approved with Conditions
Date: 10/31/17

3.3 IDENTIFICATION

A. Comply with Section 260553 "Identification for Electrical Systems."

B. Identify each receptacle with panelboard identification and circuit number. Use hot, stamped, or engraved machine printing with black-filled lettering on face of plate, and durable wire markers or tags inside outlet boxes.

3.4 FIELD QUALITY CONTROL

A. Test straight-blade for the retention force of the grounding blade according to NFPA 99. Retention force shall be not less than 4 oz. (115 g).

B. Wiring device will be considered defective if it does not pass tests and inspections.

C. Prepare test and inspection reports.

END OF SECTION 262726

Reviewed for Code Compliance
Inspections Division
Approved with Conditions
Date: 10/31/17

SECTION 264700

PANELBOARDS

PART 1 GENERAL

1.01 WORK INCLUDED

A. Service and distribution panelboards.

1.02 RELATED WORK

A. Drawings and general provisions of the Contract, including General and Supplementary Conditions and Division 01 Specification Sections, apply to this Section.

1.03 REFERENCES

A. NECA (National Electrical Contractors Assoc.) "Standard of Installation".

B. FS W-C-375 - Circuit Breakers, Molded Case, Branch Circuit and Service.

C. NEMA AB 1 - Molded Case Circuit Breakers.

D. NEMA KS 1 - Enclosed Switches.

E. NEMA PB 1 - Panelboards.

F. NEMA PB 1.1 - Instructions for Safe Installation, Operation and Maintenance of Panelboards Rated 600 Volts or Less.

G. NEMA PB 1.2 - Application Guide for Ground-Fault Protective Devices for Equipment.

H. NFPA 70 - National Electrical Code.

1.04 SUBMITTALS

A. Submit shop drawings for equipment and component devices.

B. Include outline and support point dimensions, voltage, main bus ampacity, integrated short circuit ampere rating, circuit breaker and fusible switch arrangement and sizes.

1.05 SPARE PARTS

A. Keys: Furnish 4 each to Owner.

Reviewed for Code Compliance
Inspections Division
Approved with Conditions
Date: 10/31/17

PART 2 PRODUCTS

2.01 PANELBOARDS

A. Main and Distribution Panelboards

1. Panelboards: NEMA PB 1; circuit breaker type – bolt on.
2. Enclosure: NEMA PB 1; Type 1.
3. Provide cabinet front with concealed trim clamps, screw cover, and hinged door with flush lock. Finish in manufacturer's standard gray enamel.
4. Provide panelboards with aluminum bus, ratings as scheduled on Drawings. Provide copper ground bus in all panelboards.
5. Minimum Integrated Short Circuit Rating: Short circuit rating for LP panels shall be 22,000 AIC. Main Service Circuit Breaker 100,000 AIC or as noted on drawings.
6. Molded Case Circuit Breakers: NEMA AB 1 FS W-C-375; provide circuit breakers with integral thermal and instantaneous magnetic trip in each pole. Provide circuit breakers UL listed as Type HACR for air conditioning equipment branch circuits.
7. Molded Case Circuit Breakers with Current Limiters: NEMA AB 1 FS W-C-375; provide circuit breakers with replaceable current limiting elements, in addition to integral thermal and instantaneous magnetic trip in each pole.
8. Current Limiting Molded Case Circuit Breakers; NEMA AB 1 FS W-C-375; provide circuit breakers with integral thermal and instantaneous magnetic trip in each pole, coordinated with automatically resetting current limiting elements in each pole. Interrupting rating 100,000 symmetrical amperes, let-through current and energy level less than permitted for same size Class RK-5 fuse.
9. Provide circuit breaker accessory trip units and auxiliary contacts as indicated.
10. Install the quantity of corrosion inhibiting compound recommended by manufacturer in all wireways and device enclosures. This includes PVC enclosures where device terminals are exposed to the atmosphere.

Branch Circuit Panelboards

1. Lighting and Appliance Branch Circuit Panelboards: NEMA PB 1; circuit breaker type. FS W-P-115; Type I, Class 1.
2. Enclosure: NEMA PB 1; Type 1.
3. Cabinet Size: 6 inches deep; 20 inches wide for 240 volt and less panelboards.
4. Provide surface cabinet front with concealed trip clamps, concealed hinge and flush lock all keyed alike. Finish in manufacturer's standard gray enamel.
5. Provide panelboards with aluminum bus, ratings as scheduled on Drawings. Provide copper ground bus in all panelboards.
6. Minimum Integrated Short Circuit Rating: 22,000 amperes rms symmetrical for 208 volt panelboards or as shown on Drawings.
7. Molded Case Circuit Breakers: NEMA AB 1 FS W-C- 375; bolt-on type thermal magnetic trip circuit breakers, with common trip handle for all poles. Provide circuit breakers UL listed as Type SWD for lighting circuits. Provide UL Class A ground fault interrupter circuit breakers where scheduled on Drawings.
8. Current Limiting Molded Case Circuit Breakers: NEMA AB 1 FS W-C-375; provide circuit breakers with integral thermal and instantaneous magnetic trip in each pole, coordinated with automatically resetting current limiting elements in each pole.

Reviewed for Code Compliance
Inspections Division
Approved with Conditions
Date: 10/31/17

Interrupting rating 100,000 symmetrical amperes, let-through current and energy leve less than permitted for same size Class RK-5 fuse.

9. Provide circuit breaker accessory trip units and auxiliary contacts as indicated.

PART 3 EXECUTION

3.01 INSTALLATION

A. Install panelboards plumb and flush with wall finishes, in conformance with NEMA PB 1.1.

B. Height: 6 feet to top of panelboard maximum.

C. Provide filler plates for unused spaces in panelboards.

D. Provide typed or neatly handwritten circuit directory for each branch circuit panelboard. Revise directory to reflect circuiting changes required to balance phase loads. Label Panels per Section 261950.

E. Provide 6 – 1” EMT conduits from recessed panelboards to accessible point above the ceiling wherever possible.

3.02 FIELD QUALITY CONTROL

A. Measure steady state load currents at each panelboard feeder. Should the difference at any panelboard between phases exceed 20 percent, rearrange circuits in the panelboard to balance the phase loads within 20 percent. Take care to maintain proper phasing for multi-wire branch circuits.

B. Visual and Mechanical Inspection: Inspect for physical damage, proper alignment, anchorage, and grounding. Check proper installation and tightness of connections for circuit breakers, fusible switches, and fuses.

*** END OF SECTION ***

Reviewed for Code Compliance
Inspections Division
Approved with Conditions
Date: 10/31/17

SECTION 265100

INTERIOR LIGHTING

PART 1 - GENERAL

1.1 RELATED DOCUMENTS

A. Drawings and general provisions of the Contract, including General and Supplementary Conditions and Division 01 Specification Sections, apply to this Section.

1.2 SUMMARY

A. Section Includes:

1. Interior lighting fixtures, LEDs and drivers.
2. Emergency lighting units.
3. Exit signs.
4. Lighting fixture supports.

1.3 DEFINITIONS

A. CCT: Correlated color temperature.

B. CRI: Color-rendering index.

C. LER: Luminaire efficacy rating.

D. Lumen: Measured output of lamp and luminaire, or both.

E. Luminaire: Complete lighting fixture, including ballast housing if provided.

1.4 ACTION SUBMITTALS

A. Product Data: For each type of lighting fixture, arranged in order of fixture designation. Include data on features, accessories, finishes, and the following:

1. Physical description of lighting fixture including dimensions.
2. Emergency lighting units including battery and charger.
3. Energy-efficiency data.
4. Life, output (lumens, CCT, and CRI), and energy-efficiency data for lamps.
5. Lamp data including dimensions, color temperature and power consumption
6. Photometric data and adjustment factors based on laboratory tests, complying with IESNA Lighting Measurements Testing & Calculation Guides, of each lighting fixture type.

Reviewed for Code Compliance
Inspections Division
Approved with Conditions
Date: 10/31/17

The adjustment factors shall be for lamps, ballasts, and accessories identical to the indicated for the lighting fixture as applied in this Project.

a. Testing Agency Certified Data: For indicated fixtures, photometric data shall be certified by a qualified independent testing agency. Photometric data for remaining fixtures shall be certified by manufacturer.
b. Manufacturer Certified Data: Photometric data shall be certified by a manufacturer's laboratory with a current accreditation under the National Voluntary Laboratory Accreditation Program for Energy Efficient Lighting Products.

B. Installation instructions.

1.5 CLOSEOUT SUBMITTALS

A. Operation and Maintenance Data: For lighting equipment and fixtures to include in emergency, operation, and maintenance manuals.

1. Provide a list of all lamp types used on Project; use ANSI and manufacturers' codes.

1.6 MAINTENANCE MATERIAL SUBMITTALS

A. Furnish extra materials that match products installed and that are packaged with protective covering for storage and identified with labels describing contents.

1. Lamps: 10 of each type and rating installed. Furnish at least one of each type.
2. Plastic Diffusers and Lenses: One of each type and rating installed. Furnish at least one of each type.
3. Ballasts: 2 of each type and rating installed. Furnish at least one of each type.
4. Globes and Guards: 1 of each type and rating installed. Furnish at least one of each type.

1.7 QUALITY ASSURANCE

A. Electrical Components, Devices, and Accessories: Listed and labeled as defined in NFPA 70, by a qualified testing agency, and marked for intended location and application.

B. Comply with NFPA 70.

1.8 COORDINATION

A. Coordinate layout and installation of lighting fixtures and suspension system with other construction that penetrates ceilings or is supported by them, including HVAC equipment, fire-suppression system, and partition assemblies.

Reviewed for Code Compliance
Inspections Division
Approved with Conditions
Date: 10/31/17

PART 2 - PRODUCTS

2.1 MANUFACTURERS

A. Products: Subject to compliance with requirements, available products that may be incorporated into the Work include, but are not limited to, product(s) indicated on Drawings.

2.2 GENERAL REQUIREMENTS FOR LIGHTING FIXTURES AND COMPONENTS

A. Recessed Fixtures: Comply with NEMA LE 4 for ceiling compatibility for recessed fixtures.

B. Metal Parts: Free of burrs and sharp corners and edges.

C. Sheet Metal Components: Steel unless otherwise indicated. Form and support to prevent warping and sagging.

D. Doors, Frames, and Other Internal Access: Smooth operating, free of light leakage under operating conditions, and designed to permit relamping without use of tools. Designed to prevent doors, frames, lenses, diffusers, and other components from falling accidentally during relamping and when secured in operating position.

E. Diffusers and Globes:

1. Acrylic Lighting Diffusers: 100 percent virgin acrylic plastic. High resistance to yellowing and other changes due to aging, exposure to heat, and UV radiation.

   a. Lens Thickness: At least 0.125 inch (3.175 mm) minimum unless otherwise indicated.
   b. UV stabilized.

2. Glass: Annealed crystal glass unless otherwise indicated.

2.3 LEDs:

1. The light source of the luminaires shall consist of LED arrays or bars. If required, the LED arrays or bars shall be removable.
2. The LEDs shall be either white or RGB, according to the light fixture schedule and Drawings. For luminaires specified with white light, it is not acceptable to provide RGB LEDs mixed to produce white light.
3. Refer to the light fixture schedule and Drawings for the specified correlated color temperature (CCT) of each luminaire.
4. Individual LEDs shall be binned by manufacturer to comply with ANSI C78.377.
5. The LEDs shall be manufactured by Cree, Philips, Toshiba, Osram, Samsung, or Nichia, unless otherwise noted.

Reviewed for Code Compliance
Inspections Division
Approved with Conditions
Date: 10/31/17

2.4 DRIVERS:

1. The driver or power supply for the luminaire shall be modular and replaceable.
2. The rated life of the driver shall match the rated life of the LEDs and luminaire.
3. In general, the drive current rating of the driver shall be minimized, while still maintaining the required lumen output, to improve luminaire efficiency and life.
4. The driver shall meet the emission standards of IEC EN-61000-6-3 at a minimum. For healthcare or other applications with EMI sensitive equipment, provide drivers that meet more stringent standards as required.

2.5 EXIT SIGNS

A. General Requirements for Exit Signs: Comply with UL 924; for sign colors, visibility, luminance, and lettering size, comply with authorities having jurisdiction.

B. Internally Lighted Signs:

1. Lamps for AC Operation: LEDs, 50,000 hours minimum rated lamp life.
2. Self-Powered Exit Signs (Battery Type): Integral automatic charger in a self-contained power pack.

   a. Battery: Sealed, maintenance-free, nickel-cadmium type.
   b. Charger: Fully automatic, solid-state type with sealed transfer relay.
   c. Operation: Relay automatically energizes lamp from battery when circuit voltage drops to 80 percent of nominal voltage or below. When normal voltage is restored, relay disconnects lamps from battery, and battery is automatically recharged and floated on charger.
   d. Test Push Button: Push-to-test type, in unit housing, simulates loss of normal power and demonstrates unit operability.
   e. LED Indicator Light: Indicates normal power on. Normal glow indicates trickle charge; bright glow indicates charging at end of discharge cycle.

2.6 EMERGENCY LIGHTING UNITS

A. General Requirements for Emergency Lighting Units: Self-contained units complying with UL 924.

1. Battery: Sealed, maintenance-free, lead-acid type.
2. Charger: Fully automatic, solid-state type with sealed transfer relay.
3. Operation: Relay automatically turns lamp on when power-supply circuit voltage drops to 80 percent of nominal voltage or below. Lamp automatically disconnects from battery when voltage approaches deep-discharge level. When normal voltage is restored, relay disconnects lamps from battery, and battery is automatically recharged and floated on charger.
4. Test Push Button: Push-to-test type, in unit housing, simulates loss of normal power and demonstrates unit operability.

Reviewed for Code Compliance
Inspections Division
Approved with Conditions
Date: 10/31/17

5. LED Indicator Light: Indicates normal power on. Normal glow indicates trickle char bright glow indicates charging at end of discharge cycle.

PART 3 - EXECUTION

3.1 INSTALLATION

A. Lighting fixtures:

1. Set level, plumb, and square with ceilings and walls unless otherwise indicated.
2. Install lamps in each luminaire.

B. Temporary Lighting: If it is necessary, and approved by Architect, to use permanent luminaires for temporary lighting, install and energize the minimum number of luminaires necessary. When construction is sufficiently complete, remove the temporary luminaires, disassemble, clean thoroughly, install new lamps, and reinstall.

C. Suspended Lighting Fixture Support:

1. Pendants and Rods: Where longer than 48 inches (1200 mm), brace to limit swinging.
2. Stem-Mounted, Single-Unit Fixtures: Suspend with twin-stem hangers.
3. Continuous Rows: Use tubing or stem for wiring at one point and tubing or rod for suspension for each unit length of fixture chassis, including one at each end.
4. Do not use grid as support for pendant luminaires. Connect support wires or rods to building structure.

D. Connect wiring according to Section 260519 "Low-Voltage Electrical Power Conductors and Cables."

3.2 IDENTIFICATION

A. Install labels with panel and circuit numbers on concealed junction and outlet boxes. Comply with requirements for identification specified in Section 260553 "Identification for Electrical Systems."

3.3 FIELD QUALITY CONTROL

A. Test for Emergency Lighting: Interrupt power supply to demonstrate proper operation. Verify transfer from normal power to battery and retransfer to normal.

3.4 STARTUP SERVICE

A. Burn-in all lamps that require specific aging period to operate properly, prior to occupancy by Owner. Burn-in fluorescent and compact fluorescent lamps intended to be dimmed, for at least 100 hours at full voltage.

Reviewed for Code Compliance
Inspections Division
Approved with Conditions
Date: 10/31/17

3.5 ADJUSTING

A. Occupancy Adjustments: When requested within 12 months of date of Substantial Completion, provide on-site assistance in adjusting aimable luminaires to suit actual occupied conditions. Provide up to two visits to Project during other-than-normal occupancy hours for this purpose. Some of this work may be required after dark.

1. Adjust aimable luminaires in the presence of Architect.

END OF SECTION 265100

Reviewed for Code Compliance
Inspections Division
Approved with Conditions
Date: 10/31/17

SECTION 271100

COMMUNICATIONS EQUIPMENT ROOM FITTINGS

PART 1 - GENERAL

1.1 RELATED DOCUMENTS

A. Drawings and general provisions of the Contract, including General and Supplementary Conditions and Division 01 Specification Sections, apply to this Section.

1.2 SUMMARY

A. Section Includes:

1. Telecommunications mounting elements.
2. Telecommunications equipment racks.
3. Grounding.

B. Related Requirements:

1. Section 271500 "Communications Horizontal Cabling" for voice and data cabling associated with system panels and devices.

1.3 DEFINITIONS

A. BICSI: Building Industry Consulting Service International.

B. LAN: Local area network.

C. RCDD: Registered Communications Distribution Designer.

1.4 ACTION SUBMITTALS

A. Product Data: For each type of product.

1. Include construction details, material descriptions, dimensions of individual components and profiles, and finishes for equipment racks.
2. Include rated capacities, operating characteristics, electrical characteristics, and furnished specialties and accessories.

Reviewed for Code Compliance
Inspections Division
Approved with Conditions
Date: 10/31/17

1.5 QUALITY ASSURANCE

A. Installer Qualifications: Cabling Installer must have personnel certified by BICSI on staff.

1. Layout Responsibility: Preparation of Shop Drawings and Cabling Administration Drawings an RCDD.
2. Installation Supervision: Installation shall be under the direct supervision of Registered Technician, who shall be present at all times when Work of this Section is performed at Project site.

1.6 INFORMATIONAL SUBMITTALS

A. Qualification Data: For Installer, qualified layout technician, installation supervisor, and field inspector.

PART 2 - PRODUCTS

2.1 EQUIPMENT FRAMES

A. Manufacturers: Subject to compliance with requirements, provide products by the following:

1. Belden Inc.
2. Cooper B-Line.
3. Emerson Network Power Connectivity Solutions.
4. Hubbell Premise Wiring.
5. Leviton Commercial Networks Division.
6. Middle Atlantic Products, Inc.
7. Ortronics, Inc.
8. Panduit Corp.
9. Siemon Co. (The).
10. Tyco Electronics Corporation; AMP Products.

B. General Frame Requirements:

1. Distribution Frames: Freestanding and wall-mounting, modular-steel units designed for telecommunications terminal support and coordinated with dimensions of units to be supported.
2. Module Dimension: Width compatible with EIA 310-D standard, 19-inch (480-mm) panel mounting.
3. Finish: Manufacturer's standard, baked-polyester powder coat.

C. Floor-Mounted Racks: Modular-type, steel construction.

1. Vertical and horizontal cable management channels, top and bottom cable troughs, grounding lug, and a power strip.
2. Baked-polyester powder coat finish.

Reviewed for Code Compliance
Inspections Division
Approved with Conditions
Date: 10/31/17

D. Cable Management for Equipment Frames:

1. Metal, with integral wire retaining fingers.
2. Baked-polyester powder coat finish.
3. Vertical cable management panels shall have front and rear channels, with covers.
4. Provide horizontal crossover cable manager at the top of each relay rack, with a minimum height of two rack units each.

2.2 POWER STRIPS

A. Power Strips: Comply with UL 1363.

1. Listed and labeled as defined in NFPA 70, by a qualified testing agency, and marked for intended location and application.
2. Rack mounting.
3. Six 20-A, 120-V ac, NEMA WD 6, Configuration 5-20R receptacles.
4. LED indicator lights for power and protection status.
5. LED indicator lights for reverse polarity and open outlet ground.
6. Circuit Breaker and Thermal Fusing: When protection is lost, circuit opens and cannot be reset.
7. Circuit Breaker and Thermal Fusing: Unit continues to supply power if protection is lost.
8. Close-coupled, direct plug-in line cord.
9. Rocker-type on-off switch, illuminated when in on position.
10. Peak Single-Impulse Surge Current Rating: 33 kA per phase.
11. Protection modes shall be line to neutral, line to ground, and neutral to ground. UL 1449 clamping voltage for all three modes shall be not more than 330 V.

2.3 GROUNDING

A. Comply with requirements in Section "Grounding and Bonding" for grounding conductors and connectors.

B. Telecommunications Main Bus Bar:

1. Connectors: Mechanical type, cast silicon bronze, solderless compression-type wire terminals, and long-barrel, two-bolt connection to ground bus bar.
2. Ground Bus Bar: Copper, minimum 1/4 inch thick by 4 inches wide (6 mm thick by 100 mm wide) with 9/32-inch (7.14-mm) holes spaced 1-1/8 inches (28 mm) apart.
3. Stand-Off Insulators: Comply with UL 891 for use in switchboards, 600 V. Lexan or PVC, impulse tested at 5000 V.

C. Comply with J-STD-607-A.

Reviewed for Code Compliance
Inspections Division
Approved with Conditions
Date: 10/31/17

2.4 LABELING

A. Comply with TIA/EIA-606-A and UL 969 for a system of labeling materials, including label stocks, laminating adhesives, and inks used by label printers.

PART 3 - EXECUTION

3.1 INSTALLATION

A. Comply with NECA 1.

B. Comply with BICSI TDMM for layout and installation of communications equipment rooms.

C. Bundle, lace, and train conductors and cables to terminal points without exceeding manufacturer's limitations on bending radii. Install lacing bars and distribution spools.

D. Coordinate layout and installation of communications equipment with Owner's telecommunications and LAN equipment and service suppliers. Coordinate service entrance arrangement with local exchange carrier.

1. Meet jointly with telecommunications and LAN equipment suppliers, local exchange carrier representatives, and Owner to exchange information and agree on details of equipment arrangements and installation interfaces.
2. Record agreements reached in meetings and distribute them to other participants.
3. Adjust arrangements and locations of distribution frames, cross-connects, and patch panels in equipment rooms to accommodate and optimize arrangement and space requirements of telephone switch and LAN equipment.
4. Adjust arrangements and locations of equipment with distribution frames, cross-connects, and patch panels of cabling systems of other communications, electronic safety and security, and related systems that share space in the equipment room.

E. Coordinate location of power raceways and receptacles with locations of communications equipment requiring electrical power to operate.

3.2 FIRESTOPPING

A. Comply with TIA-569-B, Annex A, "Firestopping."

B. Comply with BICSI TDMM, "Firestopping Systems" Article.

3.3 GROUNDING

A. Install grounding according to BICSI TDMM, "Grounding, Bonding, and Electrical Protection" Chapter.

B. Comply with J-STD-607-A.

Reviewed for Code Compliance
Inspections Division
Approved with Conditions
Date: 10/31/17

C. Locate grounding bus bar to minimize the length of bonding conductors. Fasten to v allowing at least 2-inch (50-mm) clearance behind the grounding bus bar. Connect grounding bus bar with a minimum No. 4 AWG grounding electrode conductor from grounding bus bar to suitable electrical building ground.

D. Bond metallic equipment to the grounding bus bar, using not smaller than No. 6 AWG equipment grounding conductor.

1. Bond the shield of shielded cable to the grounding bus bar in communications rooms and spaces.

3.4 IDENTIFICATION

A. Identify system components, wiring, and cabling complying with TIA/EIA-606-A. Comply with requirements in Section "Identification for Electrical Systems."

B. Labels shall be preprinted or computer-printed type.

END OF SECTION 271100

Reviewed for Code Compliance
Inspections Division
Approved with Conditions
Date: 10/31/17

SECTION 271500

COMMUNICATIONS HORIZONTAL CABLING

PART 1 - GENERAL

1.1 RELATED DOCUMENTS

A. Drawings and general provisions of the Contract, including General and Supplementary Conditions and Division 01 Specification Sections, apply to this Section.

1.2 SUMMARY

A. Section Includes:

1. UTP cabling.
2. Coaxial Cable
3. Cable connecting hardware, patch panels, and cross-connects.
4. Telecommunications outlet/connectors.
5. Cabling system identification products.

1.3 DEFINITIONS

A. BICSI: Building Industry Consulting Service International.

B. Cross-Connect: A facility enabling the termination of cable elements and their interconnection or cross-connection.

C. EMI: Electromagnetic interference.

D. IDC: Insulation displacement connector.

E. LAN: Local area network.

F. Outlet/Connectors: A connecting device in the work area on which horizontal cable or outlet cable terminates.

G. RCDD: Registered Communications Distribution Designer.

H. UTP: Unshielded twisted pair.

Reviewed for Code Compliance
Inspections Division
Approved with Conditions
Date: 10/31/17

1.4 ADMINISTRATIVE REQUIREMENTS

A. Coordinate layout and installation of telecommunications cabling with Owner's telecommunications and LAN equipment and service suppliers.

B. Coordinate telecommunications outlet/connector locations with location of power receptacles at each work area.

1.5 ACTION SUBMITTALS

A. Product Data: For each type of product.

1.6 INFORMATIONAL SUBMITTALS

A. Qualification Data: For Installer, qualified layout technician, installation supervisor, and field inspector.

B. Source quality-control reports.

C. Field quality-control reports.

1.7 MAINTENANCE MATERIAL SUBMITTALS

A. Furnish extra materials that match products installed and that are packaged with protective covering for storage and identified with labels describing contents.

1. Patch-Panel Units: One of each type.
2. Connecting Blocks: One of each type.
3. Device Plates: One of each type.

1.8 QUALITY ASSURANCE

A. Installer Qualifications: Cabling Installer must have personnel certified by BICSI on staff.

1. Layout Responsibility: Preparation of Shop Drawings and Cabling Administration Drawings an RCDD.
2. Installation Supervision: Installation shall be under the direct supervision of Registered Technician, who shall be present at all times when Work of this Section is performed at Project site.
3. Testing Supervisor: Currently certified by BICSI as an RCDD to supervise on-site testing.

1.9 DELIVERY, STORAGE, AND HANDLING

A. Test cables upon receipt at Project site.
1. Test each pair of UTP cable for open and short circuits.

Reviewed for Code Compliance
Inspections Division
Approved with Conditions
Date: 10/31/17

PART 2 - PRODUCTS

2.1 HORIZONTAL CABLING DESCRIPTION

A. Horizontal cable and its connecting hardware provide the means of transporting signals between the telecommunications outlet/connector and the horizontal cross-connect located in the communications equipment room. This cabling and its connecting hardware are called a "permanent link," a term that is used in the testing protocols.

1. TIA/EIA-568-B.1 requires that a minimum of two telecommunications outlet/connectors be installed for each work area.
2. Horizontal cabling shall contain no more than one transition point or consolidation point between the horizontal cross-connect and the telecommunications outlet/connector.
3. Bridged taps and splices shall not be installed in the horizontal cabling.

B. The maximum allowable horizontal cable length is 295 feet (90 m). This maximum allowable length does not include an allowance for the length of 16 feet (4.9 m) to the workstation equipment or in the horizontal cross-connect.

2.2 PERFORMANCE REQUIREMENTS

A. General Performance: Horizontal cabling system shall comply with transmission standards in TIA/EIA-568-B.1 when tested according to test procedures of this standard.

B. Surface-Burning Characteristics: Comply with ASTM E 84; testing by a qualified testing agency. Identify products with appropriate markings of applicable testing agency.

1. Flame-Spread Index: 25 or less.
2. Smoke-Developed Index: 50 or less.

C. Electrical Components, Devices, and Accessories: Listed and labeled as defined in NFPA 70, by a qualified testing agency, and marked for intended location and application.

D. Grounding: Comply with J-STD-607-A.

2.3 UTP CABLE

A. Manufacturers: Subject to compliance with requirements, available manufacturers offering products that may be incorporated into the Work include, but are not limited to, the following:

1. ADC.
2. Belden Inc.
3. Berk-Tek; a Nexans company.
4. CommScope, Inc.
5. Draka Cableteq USA.
6. Genesis Cable Products; Honeywell International, Inc.

Reviewed for Code Compliance
Inspections Division
Approved with Conditions
Date: 10/31/17

7. Mohawk; a division of Belden Networking, Inc.
8. Superior Essex Inc.
9. SYSTIMAX Solutions; a CommScope, Inc. brand.
10. 3M Communication Markets Division.
11. Tyco Electronics Corporation; AMP Products.

B. Description: 100-ohm, four-pair UTP, covered with a blue thermoplastic jacket.

1. Comply with ICEA S-90-661 for mechanical properties.
2. Comply with TIA/EIA-568-B.1 for performance specifications.
3. Comply with TIA/EIA-568-B.2, Category 5e.
4. Listed and labeled by an NRTL acceptable to authorities having jurisdiction as complying with UL 444 and NFPA 70 for the following types:

   a. Communications, General Purpose: Type CM or CMG.
   b. Communications, Plenum Rated: Type CMP, complying with NFPA 262.
   c. Communications, Riser Rated: Type CMR, complying with UL 1666.
   d. Communications, Limited Purpose: Type CMX.
   e. Multipurpose: Type MP or MPG.
   f. Multipurpose, Plenum Rated: Type MPP, complying with NFPA 262.
   g. Multipurpose, Riser Rated: Type MPR, complying with UL 1666.

2.4 UTP CABLE HARDWARE

A. Manufacturers: Subject to compliance with requirements, available manufacturers offering products that may be incorporated into the Work include, but are not limited to, the following:

1. ADC.
2. American Technology Systems Industries, Inc.
3. Belden Inc.
4. Dynacom Inc.
5. Hubbell Premise Wiring.
6. Leviton Commercial Networks Division.
7. Molex Premise Networks; a division of Molex, Inc.
8. Panduit Corp.
9. Siemon Co. (The).
10. Tyco Electronics Corporation; AMP Products.

B. General Requirements for Cable Connecting Hardware: Comply with TIA/EIA-568-B.2, IDC type, with modules designed for punch-down caps or tools. Cables shall be terminated with connecting hardware of same category or higher.

C. Connecting Blocks: 110-style IDC for Category 5e. Provide blocks for the number of cables terminated on the block, plus 25 percent spare. Integral with connector bodies, including plugs and jacks where indicated.

D. Cross-Connect: Modular array of connecting blocks arranged to terminate building cables and permit interconnection between cables.

Reviewed for Code Compliance
Inspections Division
Approved with Conditions
Date: 10/31/17

E. Patch Panel: Modular panels housing multiple-numbered jack units with IDC-type connect at each jack for permanent termination of pair groups of installed cables.

F. Jacks and Jack Assemblies: Modular, color-coded, eight-position modular receptacle units with integral IDC-type terminals.

1. Patch cords shall have bend-relief-compliant boots and color-coded icons to ensure Category 5e performance. Patch cords shall have latch guards to protect against snagging.

2.5 COAXIAL CABLE

A. The drop cable shall be plenum rated RG-6U with 100% shielding. The cable shall be West Penn Wire 25841, or approved equal.

2.6 TELECOMMUNICATIONS OUTLET/CONNECTORS

A. Jacks: 100-ohm, balanced, twisted-pair connector; four-pair, eight-position modular. Comply with TIA/EIA-568-B.1.

B. Workstation Outlets: Port-connector assemblies, with quantities shown on drawings, mounted in single faceplate.

1. Plastic Faceplate: High-impact plastic. Coordinate color with Section 262726 "Wiring Devices."
2. For use with snap-in jacks accommodating any combination of UTP.
3. Legend: Machine printed, in the field, using adhesive-tape label.
4. Legend: Snap-in, clear-label covers and machine-printed paper inserts.

2.7 GROUNDING

A. Comply with requirements in Section 260526 "Grounding and Bonding for Electrical Systems" for grounding conductors and connectors.

B. Comply with J-STD-607-A.

2.8 IDENTIFICATION PRODUCTS

A. Comply with TIA/EIA-606-A and UL 969 for labeling materials, including label stocks, laminating adhesives, and inks used by label printers.

B. Comply with requirements in Section 260553 "Identification for Electrical Systems."

Reviewed for Code Compliance
Inspections Division
Approved with Conditions
Date: 10/31/17

PART 3 - EXECUTION

3.1 WIRING METHODS

A. Install cables in pathways and cable trays except within consoles, cabinets, desks, and counters and except in accessible ceiling spaces and in gypsum board partitions where unenclosed wiring method may be used. Conceal pathways and cables except in unfinished spaces.

1. Install plenum cable in environmental air spaces, including plenum ceilings.

B. Conceal conductors and cables in accessible ceilings, walls, and floors where possible.

C. Wiring within Enclosures:

1. Bundle, lace, and train conductors to terminal points with no excess and without exceeding manufacturer's limitations on bending radii.
2. Install lacing bars and distribution spools.
3. Install conductors parallel with or at right angles to sides and back of enclosure.

3.2 INSTALLATION OF CABLES

A. Comply with NECA 1.

B. General Requirements for Cabling:

1. Comply with TIA/EIA-568-B.1.
2. Comply with BICSI ITSIM, Ch. 6, "Cable Termination Practices."
3. Install 110-style IDC termination hardware unless otherwise indicated.
4. Terminate conductors; no cable shall contain unterminated elements. Make terminations only at indicated outlets, terminals, cross-connects, and patch panels.
5. Cables may not be spliced. Secure and support cables at intervals not exceeding 30 inches (760 mm) and not more than 6 inches (150 mm) from cabinets, boxes, fittings, outlets, racks, frames, and terminals.
6. Install lacing bars to restrain cables, to prevent straining connections, and to prevent bending cables to smaller radii than minimums recommended by manufacturer.
7. Bundle, lace, and train conductors to terminal points without exceeding manufacturer's limitations on bending radii, but not less than radii specified in BICSI ITSIM, "Cabling Termination Practices" Chapter. Install lacing bars and distribution spools.
8. Do not install bruised, kinked, scored, deformed, or abraded cable. Do not splice cable between termination, tap, or junction points. Remove and discard cable if damaged during installation and replace it with new cable.
9. In the communications equipment room, install a 10-foot- (3-m-) long service loop on each end of cable.
10. Pulling Cable: Comply with BICSI ITSIM, Ch. 4, "Pulling Cable." Monitor cable pull tensions.

Reviewed for Code Compliance
Inspections Division
Approved with Conditions
Date: 10/31/17

C. UTP Cable Installation:

1. Comply with TIA/EIA-568-B.2.
2. Do not untwist UTP cables more than 1/2 inch (12 mm) from the point of termination to maintain cable geometry.

D. Open-Cable Installation:

1. Install cabling with horizontal and vertical cable guides in telecommunications spaces with terminating hardware and interconnection equipment.
2. Suspend UTP cable not in a wireway or pathway a minimum of 8 inches (200 mm) above ceilings by cable supports not more than 60 inches (1524 mm) apart.
3. Cable shall not be run through structural members or in contact with pipes, ducts, or other potentially damaging items.

E. Group connecting hardware for cables into separate logical fields.

F. Separation from EMI Sources:

1. Comply with BICSI TDMM and TIA-569-B for separating unshielded copper voice and data communication cable from potential EMI sources, including electrical power lines and equipment.
2. Separation between open communications cables or cables in nonmetallic raceways and unshielded power conductors and electrical equipment shall be as follows:

   a. Electrical Equipment Rating Less Than 2 kVA: A minimum of 5 inches (127 mm).
   b. Electrical Equipment Rating between 2 and 5 kVA: A minimum of 12 inches (300 mm).
   c. Electrical Equipment Rating More Than 5 kVA: A minimum of 24 inches (610 mm).

3. Separation between communications cables in grounded metallic raceways and unshielded power lines or electrical equipment shall be as follows:

   a. Electrical Equipment Rating Less Than 2 kVA: A minimum of 2-1/2 inches (64 mm).
   b. Electrical Equipment Rating between 2 and 5 kVA: A minimum of 6 inches (150 mm).
   c. Electrical Equipment Rating More Than 5 kVA: A minimum of 12 inches (300 mm).

4. Separation between communications cables in grounded metallic raceways and power lines and electrical equipment located in grounded metallic conduits or enclosures shall be as follows:

   a. Electrical Equipment Rating Less Than 2 kVA: No requirement.
   b. Electrical Equipment Rating between 2 and 5 kVA: A minimum of 3 inches (76 mm).
   c. Electrical Equipment Rating More Than 5 kVA: A minimum of 6 inches (150 mm).

Reviewed for Code Compliance
Inspections Division
Approved with Conditions
Date: 10/31/17

5. Separation between Communications Cables and Electrical Motors and Transformers kVA or HP and Larger: A minimum of 48 inches (1200 mm).
6. Separation between Communications Cables and Fluorescent Fixtures: A minimum of 5 inches (127 mm).

3.3 FIRESTOPPING

A. Comply with requirements in Section 078413 "Penetration Firestopping."

B. Comply with TIA-569-B, Annex A, "Firestopping."

C. Comply with BICSI TDMM, "Firestopping Systems" Article.

3.4 GROUNDING

A. Install grounding according to BICSI TDMM, "Grounding, Bonding, and Electrical Protection" Chapter.

B. Comply with J-STD-607-A.

C. Locate grounding bus bar to minimize the length of bonding conductors. Fasten to wall allowing at least 2-inch (50-mm) clearance behind the grounding bus bar. Connect grounding bus bar with a minimum No. 4 AWG grounding electrode conductor from grounding bus bar to suitable electrical building ground.

D. Bond metallic equipment to the grounding bus bar, using not smaller than No. 6 AWG equipment grounding conductor.

3.5 IDENTIFICATION

A. Identify system components, wiring, and cabling complying with TIA/EIA-606-A. Comply with requirements for identification specified in Section "Identification for Electrical Systems."

B. Cable Schedule: Post in prominent location in each equipment room and wiring closet. List incoming and outgoing cables and their designations, origins, and destinations. Protect with rigid frame and clear plastic cover. Furnish an electronic copy of final comprehensive schedules for Project.

C. Cabling Administration Drawings: Show building floor plans with cabling administration-point labeling. Identify labeling convention and show labels for telecommunications closets, terminal hardware and positions, horizontal cables, work areas and workstation terminal positions, grounding buses and pathways, and equipment grounding conductors. Follow convention of TIA/EIA-606-A. Furnish electronic record of all drawings, in software and format selected by Owner.

D. Cable and Wire Identification:

Reviewed for Code Compliance
Inspections Division
Approved with Conditions
Date: 10/31/17

1. Label each cable within 4 inches (100 mm) of each termination and tap, where it accessible in a cabinet or junction or outlet box, and elsewhere as indicated.
2. Each wire connected to building-mounted devices is not required to be numbered at device if color of wire is consistent with associated wire connected and numbered within panel or cabinet.
3. Exposed Cables and Cables in Cable Trays and Wire Troughs: Label each cable at intervals not exceeding 15 feet (4.5 m).
4. Label each terminal strip and screw terminal in each cabinet, rack, or panel.

    a. Individually number wiring conductors connected to terminal strips, and identify each cable or wiring group being extended from a panel or cabinet to a building-mounted device shall be identified with name and number of particular device as shown.
    b. Label each unit and field within distribution racks and frames.

5. Identification within Connector Fields in Equipment Rooms and Wiring Closets: Label each connector and each discrete unit of cable-terminating and connecting hardware. Where similar jacks and plugs are used for both voice and data communication cabling, use a different color for jacks and plugs of each service.

E. Labels shall be preprinted or computer-printed type with printing area and font color that contrasts with cable jacket color but still complies with requirements in TIA/EIA-606-A.

1. Cables use flexible vinyl or polyester that flex as cables are bent.

3.6 FIELD QUALITY CONTROL

A. Perform the following tests and inspections:

1. Visually inspect UTP and optical fiber cable jacket materials for NRTL certification markings. Inspect cabling terminations in communications equipment rooms for compliance with color-coding for pin assignments, and inspect cabling connections for compliance with TIA/EIA-568-B.1.
2. Visually confirm Category 5e, marking of outlets, cover plates, outlet/connectors, and patch panels.
3. Visually inspect cable placement, cable termination, grounding and bonding, equipment and patch cords, and labeling of all components.

B. End-to-end cabling will be considered defective if it does not pass tests and inspections.

C. Prepare test and inspection reports.

END OF SECTION 271500

Reviewed for Code Compliance
Inspections Division
Approved with Conditions
Date: 10/31/17

SECTION 275223

AID CALL SYSTEM

PART 1 - GENERAL

1.1 SUMMARY

A. Section includes visual/tone aid-call system.

1.2 ACTION SUBMITTALS

A. Product Data: For each type of product indicated.

1.3 CLOSEOUT SUBMITTALS

A. Operation and maintenance data.

PART 2 - PRODUCTS

2.1 VISUAL/TONE AID-CALL SYSTEM

A. Basis-of-Design Product: Subject to compliance with requirements, provide product indicated on Drawings or comparable product by one of the following:

1. Aiphone Co., Ltd.
2. Alpha Communications.
3. Cornell Communications, Inc.
4. GE Security, Sound and Communications.
5. Intego Systems, Inc.
6. Intercall Systems, Inc.
7. Jeron Electronic Systems, Inc.
8. Rauland-Borg Corporation.
9. SimplexGrinnell LP.
10. TekTone Sound & Signal Mfg., Inc.

B. Operational Requirements:

1. Patient Station Call: Lights a steady call-placed lamp on the station, steady lamps in the zone light and corridor dome light associated with the patient's room, and steady lamps at the central annunciator and other system display devices and displays message on master and staff/duty stations. At the same time, it sounds a programmed tone at

Reviewed for Code Compliance
Inspections Division
Approved with Conditions
Date: 10/31/17

intervals, at the respective annunciator and master and staff/duty stations. Legends the central annunciator and master station identify the calling station.

2. Pull-Cord-Call Station Call: Flashes a call-placed lamp on the station and distinctive-color lamps in the zone light and corridor dome light and at the central annunciator and staff/duty stations. At the same time, it sounds a programmed tone at intervals, at the central annunciator.

C. Central Annunciator:

1. Lamp type.
2. Lamp Legends: Machine lettered and legible from a distance of at least 48 inches (1200 mm) when a call is present. Legend shall identify initiating station and priority of call.
3. Power-on Indicator: Digital, or push-to-test switch.
4. Audible Signal: Electronic tone.

D. Central Equipment Cabinet:

1. Lockable metal.
2. Houses power supplies, controls, terminal strips, and other components.
3. Power-on indicator lamp.

2.2 SYSTEM COMPONENTS

A. Emergency-Call Station: Locking-type push button, labeled "Push to Call Help"; reset trigger to release push button and cancel call; and call-placed lamp, mounted in a single faceplate.

B. Pull-Cord-Call Station:

1. Pull-Down Switch: Lever-locking type, labeled "Pull Down to Call Help."
2. Reset trigger.
3. Call-placed lamp.
4. Water-resistant construction.

C. Station Faceplates:

1. Stainless steel, a minimum of 0.0375 inch (0.95 mm) thick.
2. Finish: Brushed.
3. Machine-engraved labeling identifies indicator lamps and controls.

D. Station Faceplates:

1. High-impact plastic.
2. Color: White.
3. Molded or machine-engraved labeling identifies indicator lamps and controls.

E. Corridor Dome Lights and Zone Lights:

Reviewed for Code Compliance
Inspections Division
Approved with Conditions
Date: 10/31/17

1. Three-lamp signal lights.
2. Lamps: Front replaceable without tools, low voltage with rated life of 7500 hours. Barriers are such that only one color is displayed at a time.
3. Lenses: Heat-resistant, shatterproof, translucent polymer that will not deform, discolor, or craze when exposed to hospital cleaning agents.
4. Filters: Two per unit, amber and red.

F. Cable:

1. Conductors: Jacketed single and multiple, twisted-pair copper cables.
2. Sizes and Types: As recommended by equipment manufacturer.
3. Cable for Use in Plenums: Listed and labeled for plenum installation.

G. Grounding Components: Comply with requirements in Section 260526 "Grounding and Bonding for Electrical Systems."

PART 3 - EXECUTION

3.1 INSTALLATION

A. Install cables without damaging conductors, shield, or jacket.

B. Do not bend cables, while handling or installing, to radii smaller than as recommended by manufacturer.

C. Pull cables without exceeding cable manufacturer's recommended pulling tensions.

1. Pull cables simultaneously if more than one is being installed in same raceway.
2. Use pulling compound or lubricant if necessary. Use compounds that will not damage conductor or insulation.
3. Use pulling means, including fish tape, cable, rope, and basket-weave wire or cable grips, that will not damage media or raceway.

D. Install exposed raceways and cables parallel and perpendicular to surfaces or exposed structural members, and follow surface contours. Secure and support cables by straps, staples, or similar fittings designed and installed so as not to damage cables. Secure cable at intervals not exceeding 30 inches (760 mm) and not more than 6 inches (150 mm) from cabinets, boxes, or fittings.

E. Wiring within Enclosures: Bundle, lace, and train conductors to terminal points with no excess and without exceeding manufacturer's limitations on bending radii. Provide and use lacing bars and distribution spools.

F. Separation of Wires: Separate speaker/microphone, line-level, speaker-level, and power-wiring runs. Run in separate raceways or, if exposed or in same enclosure, provide 12-inch (300-mm) minimum separation between conductors to speaker/microphones and adjacent

Reviewed for Code Compliance
Inspections Division
Approved with Conditions
Date: 10/31/17

parallel power and telephone wiring. Provide separation as recommended by equipm manufacturer for other conductors.

G. Splices, Taps, and Terminations: Make splices, taps, and terminations on numbered terminal strips in junction, pull, and outlet boxes; terminal cabinets; and equipment enclosures. Install terminal cabinets where there are splices, taps, or terminations for eight or more conductors.

H. Impedance and Level Matching: Carefully match input and output impedances and signal levels at signal interfaces. Provide matching networks if required.

I. Identification of Conductors and Cables: Comply with requirements in Section 271500 "Communications Horizontal Cabling" for cable administration, cable schedule, and cable and wire identification.

J. Equipment Identification:

1. Comply with requirements in Section 260553 "Identification for Electrical Systems" for equipment labels and signs and labeling installation requirements.
2. Label stations, controls, and indications using approved consistent nomenclature.

3.2 GROUNDING

A. Ground cable shields and equipment to eliminate shock hazard and to minimize ground loops, common-mode returns, noise pickup, cross talk, and other signal impairments.

B. Signal Ground Terminal: Locate at main equipment cabinet. Isolate from power system and equipment grounding except at connection to main building ground bus.

C. Grounding Provisions: Comply with requirements in Section 260526 "Grounding and Bonding for Electrical Systems."

3.3 FIELD QUALITY CONTROL

A. Manufacturer's Field Service: Engage a factory-authorized service representative to inspect, test, and adjust components, assemblies, and equipment installations, including connections.

B. Perform tests and inspections.

1. Manufacturer's Field Service: Engage a factory-authorized service representative to inspect components, assemblies, and equipment installations, including connections, and to assist in testing.

3.4 DEMONSTRATION

A. Train Owner's maintenance personnel and caregiver staff to adjust, operate, and maintain aid-call equipment.

Reviewed for Code Compliance
Inspections Division
Approved with Conditions
Date: 10/31/17

END OF SECTION 275223

Reviewed for Code Compliance
Inspections Division
Approved with Conditions
Date: 10/31/17

SECTION 283111

DIGITAL, ADDRESSABLE FIRE-ALARM SYSTEM

PART 1 - GENERAL

1.1 SUMMARY

A. Section Includes:

1. Fire-alarm control unit.
2. Manual fire-alarm boxes.
3. System smoke detectors.
4. Heat detectors.
5. Notification appliances.
6. Remote annunciator.
7. Addressable interface device.
8. Digital alarm communicator transmitter.

1.2 SYSTEM DESCRIPTION

A. Noncoded, addressable system, with multiplexed signal transmission, dedicated to fire-alarm service only.

1.3 ACTION SUBMITTALS

A. Product Data: For each type of product indicated.

B. Shop Drawings: For fire-alarm system. Include plans, elevations, sections, details, and attachments to other work.

1. Comply with recommendations in the "Documentation" Section of the "Fundamentals of Fire Alarm Systems" Chapter in NFPA 72.
2. Include voltage drop calculations for notification appliance circuits.
3. Include battery-size calculations.
4. Include performance parameters and installation details for each detector, verifying that each detector is listed for complete range of air velocity, temperature, and humidity possible when air-handling system is operating.
5. Include plans, sections, and elevations of heating, ventilating, and air-conditioning ducts, drawn to scale and coordinating installation of duct smoke detectors and access to them. Show critical dimensions that relate to placement and support of sampling tubes, detector housing, and remote status and alarm indicators. Locate detectors according to manufacturer's written recommendations.

Reviewed for Code Compliance
Inspections Division
Approved with Conditions
Date: 10/31/17

6. Include floor plans to indicate final outlet locations showing address of each addressa device. Show size and route of cable and conduits.

C. General Submittal Requirements:

1. Submittals shall be approved by authorities having jurisdiction prior to submitting them to Architect.
2. Shop Drawings shall be prepared by persons with the following qualifications:

   a. Trained and certified by manufacturer in fire-alarm system design.
   b. NICET-certified fire-alarm technician, Level III minimum.

D. Delegated-Design Submittal: For smoke and heat detectors indicated to comply with performance requirements and design criteria, including analysis data signed and sealed by the qualified professional engineer responsible for their preparation.

1. Drawings showing the location of each smoke and heat detector, ratings of each, and installation details as needed to comply with listing conditions of the detector.
2. Design Calculations: Calculate requirements for selecting the spacing and sensitivity of detection, complying with NFPA 72.

1.4 INFORMATIONAL SUBMITTALS

A. Qualification Data: For qualified Installer.

B. Field quality-control reports.

1.5 CLOSEOUT SUBMITTALS

A. Operation and Maintenance Data: For fire-alarm systems and components to include in emergency, operation, and maintenance manuals.

1. Comply with the "Records" Section of the "Inspection, Testing and Maintenance" Chapter in NFPA 72.
2. Provide "Record of Completion Documents" according to NFPA 72 article "Permanent Records" in the "Records" Section of the "Inspection, Testing and Maintenance" Chapter.
3. Record copy of site-specific software.
4. Provide "Maintenance, Inspection and Testing Records" according to NFPA 72 article of the same name and include the following:

   a. Frequency of testing of installed components.
   b. Frequency of inspection of installed components.
   c. Requirements and recommendations related to results of maintenance.
   d. Manufacturer's user training manuals.

5. Manufacturer's required maintenance related to system warranty requirements.

Reviewed for Code Compliance
Inspections Division
Approved with Conditions
Date: 10/31/17

6. Abbreviated operating instructions for mounting at fire-alarm control unit.

B. Software and Firmware Operational Documentation:

1. Software operating and upgrade manuals.
2. Program Software Backup: On magnetic media or compact disk, complete with data files.
3. Device address list.
4. Printout of software application and graphic screens.

1.6 QUALITY ASSURANCE

A. Installer Qualifications: Personnel shall be trained and certified by manufacturer for installation of units required for this Project.

B. Installer Qualifications: Installation shall be by personnel certified by NICET as fire-alarm Level II technician.

C. Source Limitations for Fire-Alarm System and Components: Obtain fire-alarm system from single source from single manufacturer. Components shall be compatible with, and operate as, an extension of existing system.

D. Electrical Components, Devices, and Accessories: Listed and labeled as defined in NFPA 70, by a qualified testing agency, and marked for intended location and application.

1.7 SOFTWARE SERVICE AGREEMENT

A. Comply with UL 864.

B. Technical Support: Beginning with Substantial Completion, provide software support for two years.

C. Upgrade Service: Update software to latest version at Project completion. Install and program software upgrades that become available within two years from date of Substantial Completion. Upgrading software shall include operating system. Upgrade shall include new or revised licenses for use of software.

1. Provide 30 days' notice to Owner to allow scheduling and access to system and to allow Owner to upgrade computer equipment if necessary.

PART 2 - PRODUCTS

2.1 MANUFACTURERS

A. Manufacturers: Subject to compliance with requirements, provide products by one of the following:

Reviewed for Code Compliance
Inspections Division
Approved with Conditions
Date: 10/31/17

1. AMSECO - a Potter brand; Potter Electric Signal Company.
2. Bosch Security Systems.
3. Commercial Products Group/CPG Life Safety Signals.
4. Faraday; Siemens Building Technologies, Inc.
5. Federal Signal Corporation.
6. Fire Control Instruments, Inc.; a Honeywell company.
7. Fire Lite Alarms; a Honeywell company.
8. GAMEWELL; a Honeywell company.
9. GE Infrastructure; a unit of General Electric Company.
10. Gentex Corporation.
11. Harrington Signal, Inc.
12. NOTIFIER; a Honeywell company.
13. Siemens Building Technologies, Inc.; Fire Safety Division.
14. Silent Knight; a Honeywell company.
15. SimplexGrinnell LP; a Tyco International company.

2.2 SYSTEMS OPERATIONAL DESCRIPTION

A. Fire-alarm signal initiation shall be by one or more of the following devices:

1. Manual stations.
2. Heat detectors.
3. Smoke detectors.
4. Duct smoke detectors.
5. Automatic sprinkler system water flow.

B. Fire-alarm signal shall initiate the following actions:

1. Continuously operate alarm-notification appliances.
2. Identify alarm at the fire-alarm control unit and remote annunciators.
3. Transmit an alarm signal to the remote alarm receiving station.
4. Switch heating, ventilating, and air-conditioning equipment controls to fire-alarm mode.
5. Record events in the system memory.
6. Actuate Fire/Smoke Dampers associated with duct smoke detectors.

C. Supervisory signal initiation shall be by one or more of the following devices and actions:

1. Valve supervisory switch.

D. System trouble signal initiation shall be by one or more of the following devices and actions:

1. Open circuits, shorts, and grounds in designated circuits.
2. Opening, tampering with, or removing alarm-initiating and supervisory signal-initiating devices.
3. Loss of primary power at fire-alarm control unit.
4. Ground or a single break in fire-alarm control unit internal circuits.
5. Abnormal ac voltage at fire-alarm control unit.
6. Break in standby battery circuitry.

Reviewed for Code Compliance
Inspections Division
Approved with Conditions
Date: 10/31/17

7. Failure of battery charging.
8. Abnormal position of any switch at fire-alarm control unit or annunciator.

E. System Trouble and Supervisory Signal Actions: Initiate notification appliance and annunciate at fire-alarm control unit and remote annunciators.

2.3 FIRE-ALARM CONTROL UNIT

A. General Requirements for Fire-Alarm Control Unit:

1. Field-programmable, microprocessor-based, modular, power-limited design with electronic modules, complying with UL 864 and listed and labeled by an NRTL.

   a. System software and programs shall be held in flash electrically erasable programmable read-only memory (EEPROM), retaining the information through failure of primary and secondary power supplies.
   b. Include a real-time clock for time annotation of events on the event recorder and printer.

2. Addressable control circuits for operation of mechanical equipment.

B. Alphanumeric Display and System Controls: Arranged for interface between human operator at fire-alarm control unit and addressable system components including annunciation and supervision. Display alarm, supervisory, and component status messages and the programming and control menu.

1. Annunciator and Display: Liquid-crystal type, 3 line(s) of 80 characters, minimum.
2. Keypad: Arranged to permit entry and execution of programming, display, and control commands.

C. Circuits:

1. Initiating Device, Notification Appliance, and Signaling Line Circuits: NFPA 72, Class B.

D. Door Controls: Door hold-open devices that are controlled by smoke detectors at doors in smoke barrier walls shall be connected to fire-alarm system.

E. Transmission to Remote Alarm Receiving Station: Automatically transmit alarm, supervisory, and trouble signals to a remote alarm station.

F. Primary Power: 24-V dc obtained from 120-V ac service and a power-supply module. Initiating devices, notification appliances, signaling lines, trouble signals, and supervisory signals shall be powered by 24-V dc source.

1. Alarm current draw of entire fire-alarm system shall not exceed 80 percent of the power-supply module rating.

Reviewed for Code Compliance
Inspections Division
Approved with Conditions
Date: 10/31/17

G. Secondary Power: 24-V dc supply system with batteries, automatic battery charger, and automatic transfer switch.

1. Batteries: Sealed lead calcium.

H. Instructions: Computer printout or typewritten instruction card mounted behind a plastic or glass cover in a stainless-steel or aluminum frame. Include interpretation and describe appropriate response for displays and signals. Briefly describe the functional operation of the system under normal, alarm, and trouble conditions.

2.4 MANUAL FIRE-ALARM BOXES

A. General Requirements for Manual Fire-Alarm Boxes: Comply with UL 38. Boxes shall be finished in red with molded, raised-letter operating instructions in contrasting color; shall show visible indication of operation; and shall be mounted on recessed outlet box. If indicated as surface mounted, provide manufacturer's surface back box.

1. Double-action mechanism requiring two actions to initiate an alarm, pull-lever type; with integral addressable module arranged to communicate manual-station status (normal, alarm, or trouble) to fire-alarm control unit.
2. Station Reset: Key- or wrench-operated switch.

2.5 SYSTEM SMOKE DETECTORS

A. General Requirements for System Smoke Detectors:

1. Comply with UL 268; operating at 24-V dc, nominal.
2. Detectors shall be two-wire type.
3. Integral Addressable Module: Arranged to communicate detector status (normal, alarm, or trouble) to fire-alarm control unit.
4. Base Mounting: Detector and associated electronic components shall be mounted in a twist-lock module that connects to a fixed base. Provide terminals in the fixed base for connection to building wiring.
5. Self-Restoring: Detectors do not require resetting or readjustment after actuation to restore them to normal operation.
6. Integral Visual-Indicating Light: LED type indicating detector has operated and power-on status.

B. Photoelectric Smoke Detectors:

1. Detector address shall be accessible from fire-alarm control unit and shall be able to identify the detector's location within the system and its sensitivity setting.
2. An operator at fire-alarm control unit, having the designated access level, shall be able to manually access the following for each detector:

   a. Primary status.
   b. Device type.

Reviewed for Code Compliance
Inspections Division
Approved with Conditions
Date: 10/31/17

c. Present average value.
d. Present sensitivity selected.
e. Sensor range (normal, dirty, etc.).

C. Duct Smoke Detectors: Photoelectric type complying with UL 268A.

1. Detector address shall be accessible from fire-alarm control unit and shall be able to identify the detector's location within the system and its sensitivity setting.
2. An operator at fire-alarm control unit, having the designated access level, shall be able to manually access the following for each detector:

   a. Primary status.
   b. Device type.
   c. Present average value.
   d. Present sensitivity selected.
   e. Sensor range (normal, dirty, etc.).

3. Weatherproof Duct Housing Enclosure: NEMA 250, Type 4X; NRTL listed for use with the supplied detector.
4. Each sensor shall have multiple levels of detection sensitivity.
5. Sampling Tubes: Design and dimensions as recommended by manufacturer for specific duct size, air velocity, and installation conditions were applied.
6. Relay Fan Shutdown: Rated to interrupt fan motor-control circuit.

2.6 HEAT DETECTORS

A. General Requirements for Heat Detectors: Comply with UL 521.

B. Heat Detector, Combination Type: Actuated by either a fixed temperature of 135 deg F (57 deg C) or a rate of rise that exceeds 15 deg F (8 deg C) per minute unless otherwise indicated.

1. Mounting: Twist-lock base interchangeable with smoke-detector bases.
2. Integral Addressable Module: Arranged to communicate detector status (normal, alarm, or trouble) to fire-alarm control unit.

2.7 NOTIFICATION APPLIANCES

A. General Requirements for Notification Appliances: Connected to notification appliance signal circuits, zoned as indicated, equipped for mounting as indicated and with screw terminals for system connections.

1. Combination Devices: Factory-integrated audible and visible devices in a single-mounting assembly, equipped for mounting as indicated and with screw terminals for system connections.

B. Horns: Electric-vibrating-polarized type, 24-V dc; with provision for housing the operating mechanism behind a grille. Comply with UL 464. Horns shall produce a sound-pressure level

Reviewed for Code Compliance
Inspections Division
Approved with Conditions
Date: 10/31/17

of 90 dBA, measured 10 feet (3 m) from the horn, using the coded signal prescribed in UL 46 test protocol.

C. Visible Notification Appliances: Xenon strobe lights comply with UL 1971, with clear or nominal white polycarbonate lens mounted on an aluminum faceplate. The word "FIRE" is engraved in minimum 1-inch- (25-mm-) high letters on the lens.

1. Rated Light Output:

a. 15/30/75/110 cd, selectable in the field.

2. Mounting: Wall mounted unless otherwise indicated.
3. For units with guards to prevent physical damage, light output ratings shall be determined with guards in place.
4. Flashing shall be in a temporal pattern, synchronized with other units.
5. Strobe Leads: Factory connected to screw terminals.
6. Mounting Faceplate: Factory finished, red.

2.8 REMOTE ANNUNCIATOR

A. Description: Annunciator functions shall match those of fire-alarm control unit for alarm, supervisory, and trouble indications. Manual switching functions shall match those of fire-alarm control unit, including acknowledging, silencing, resetting, and testing.

1. Mounting: Flush cabinet, NEMA 250, Type 1.

B. Display Type and Functional Performance: Alphanumeric display and LED indicating lights shall match those of fire-alarm control unit. Provide controls to acknowledge, silence, reset, and test functions for alarm, supervisory, and trouble signals.

2.9 ADDRESSABLE INTERFACE DEVICE

A. Description: Microelectronic monitor module, NRTL listed for use in providing a system address for alarm-initiating devices for wired applications with normally open contacts.

B. Integral Relay: Capable of providing a direct signal to elevator controller to initiate elevator recall or operate Fire/Smoke damper.

2.10 DIGITAL ALARM COMMUNICATOR TRANSMITTER

A. Digital alarm communicator transmitter shall be acceptable to the remote central station and shall comply with UL 632 and be listed and labeled by an NRTL.

B. Functional Performance: Unit shall receive an alarm, supervisory, or trouble signal from fire-alarm control unit and automatically capture one telephone line and dial a preset number for a remote central station. When contact is made with central station, signals shall be transmitted. If service on line is interrupted for longer than 45 seconds, transmitter shall

Reviewed for Code Compliance
Inspections Division
Approved with Conditions
Date: 10/31/17

initiate a local trouble signal and transmit the signal indicating loss of telephone line to the remote alarm receiving station over the remaining line. Transmitter shall automatically report telephone service restoration to the central station. If service is lost on both telephone lines, transmitter shall initiate the local trouble signal.

C. Local functions and display at the digital alarm communicator transmitter shall include the following:

1. Verification that both telephone lines are available.
2. Programming device.
3. LED display.
4. Manual test report function and manual transmission clear indication.
5. Communications failure with the central station or fire-alarm control unit.

D. Digital data transmission shall include the following:

1. Address of the alarm-initiating device.
2. Address of the supervisory signal.
3. Address of the trouble-initiating device.
4. Loss of ac supply or loss of power.
5. Low battery.
6. Abnormal test signal.
7. Communication bus failure.

E. Secondary Power: Integral rechargeable battery and automatic charger.

F. Self-Test: Conducted automatically every 24 hours with report transmitted to central station.

PART 3 - EXECUTION

3.1 EQUIPMENT INSTALLATION

A. Comply with NFPA 72 for installation of fire-alarm equipment.

B. Install wall-mounted equipment, with tops of cabinets not more than 72 inches (1830 mm) above the finished floor.

C. Duct Smoke Detectors: Comply with NFPA 72 and NFPA 90A. Install sampling tubes so they extend the full width of duct.

D. Heat Detectors in Elevator Shafts: Coordinate temperature rating and location with sprinkler rating and location.

E. Remote Status and Alarm Indicators: Install near each smoke detector and each sprinkler water-flow switch and valve-tamper switch that is not readily visible from normal viewing position.

Reviewed for Code Compliance
Inspections Division
Approved with Conditions
Date: 10/31/17

F. Audible Alarm-Indicating Devices: Install not less than 6 inches (150 mm) below the ceiling. Install bells and horns on flush-mounted back boxes with the device-operating mechanism concealed behind a grille.

G. Device Location-Indicating Lights: Locate in public space near the device they monitor.

3.2 CONNECTIONS

A. For fire-protection systems related to doors in fire-rated walls and partitions and to doors in smoke partitions, comply with requirements in Section "Door Hardware." Connect hardware and devices to fire-alarm system.

1. Verify that hardware and devices are NRTL listed for use with fire-alarm system in this Section before making connections.

B. Make addressable connections with a supervised interface device to the following devices and systems. Install the interface device less than 3 feet (1 m) from the device controlled. Make an addressable confirmation connection when such feedback is available at the device or system being controlled.

1. Alarm-initiating connection to elevator recall system and components.
2. Supervisory connections at valve supervisory switches.
3. Supervisory connections at elevator shunt trip breaker.

3.3 IDENTIFICATION

A. Identify system components, wiring, cabling, and terminals. Comply with requirements for identification specified in Section 260553 "Identification for Electrical Systems."

B. Install framed instructions in a location visible from fire-alarm control unit.

3.4 GROUNDING

A. Ground fire-alarm control unit and associated circuits; comply with IEEE 1100. Install a ground wire from main service ground to fire-alarm control unit.

3.5 FIELD QUALITY CONTROL

A. Tests and Inspections:

1. Visual Inspection: Conduct visual inspection prior to testing.

a. Inspection shall be based on completed Record Drawings and system documentation that is required by NFPA 72 in its "Completion Documents, Preparation" Table in the "Documentation" Section of the "Fundamentals of Fire Alarm Systems" Chapter.

Reviewed for Code Compliance
Inspections Division
Approved with Conditions
Date: 10/31/17

b. Comply with "Visual Inspection Frequencies" Table in the "Inspection" Section of the "Inspection, Testing and Maintenance" Chapter in NFPA 72; retain the "Initial/Reacceptance" column and list only the installed components.

2. System Testing: Comply with "Test Methods" Table in the "Testing" Section of the "Inspection, Testing and Maintenance" Chapter in NFPA 72.
3. Test audible appliances for the public operating mode according to manufacturer's written instructions. Perform the test using a portable sound-level meter complying with Type 2 requirements in ANSI S1.4.
4. Test audible appliances for the private operating mode according to manufacturer's written instructions.
5. Test visible appliances for the public operating mode according to manufacturer's written instructions.
6. Factory-authorized service representative shall prepare the "Fire Alarm System Record of Completion" in the "Documentation" Section of the "Fundamentals of Fire Alarm Systems" Chapter in NFPA 72 and the "Inspection and Testing Form" in the "Records" Section of the "Inspection, Testing and Maintenance" Chapter in NFPA 72.

B. Reacceptance Testing: Perform reacceptance testing to verify the proper operation of added or replaced devices and appliances.

C. Fire-alarm system will be considered defective if it does not pass tests and inspections.

D. Prepare test and inspection reports.

E. Maintenance Test and Inspection: Perform tests and inspections listed for weekly, monthly, quarterly, and semiannual periods. Use forms developed for initial tests and inspections.

F. Annual Test and Inspection: One year after date of Substantial Completion, test fire-alarm system complying with visual and testing inspection requirements in NFPA 72. Use forms developed for initial tests and inspections.

END OF SECTION 283111

CITY OF PORTLAND, MAINE
RESURGAM
Reviewed for Code Compliance
Inspections Division
Approved with Conditions
Date: 10/31/17

MEZZO

DIRECT VENT GAS FIREPLACE

HEAT&GLO®

RESURGAM CITY OF PORTLAND, MAINE
Reviewed for Code Compliance
Inspections Division
Approved with Conditions
Date: 10/31/17

Reviewed for Code Compliance
Inspections Division
Approved with Conditions
Date: 10/31/17

MEZZO

You've never experienced modern design like this. Clean. Discreet. Luxurious. We spared nothing, to give you everything. It's modern design, redefined.

DETAILS MATTER

In clean modern design, it's all about the details. No gaps. Clean finishing. And quality. Every corner, every edge and every element of the MEZZO is all about perfection.

ELEVATE THE SENSES

Flames, lights, reflections and warmth combine to stimulate the senses. Flames spread across an illuminated bed of crushed glass. And a black glass interior adds depth and intensity to the fire. We dare you to take your eyes off of it.

DEFINE YOUR DESIGN

Your style, is yours. Express it by mixing and matching fronts, finishes and interior options to create a MEZZO uniquely yours.

LEFT: *MEZZO 72 See-Through shown with clean face trim in black and crystal glass media.*

COVER: *MEZZO shown with iced fog glass media.*

CITY OF PORTLAND, MAINE
RESURGAM
Reviewed for Code Compliance
Inspections Division
Approved with Conditions
Date: 10/31/17

MEZZO 48 See-Through shown with loft forge front, iced fog glass media and natural logs.

Reviewed for Code Compliance
Inspections Division
Approved with Conditions
Date: 10/31/17

MODELS AVAILABLE

Choose a model to fit your space and application.

SINGLE-SIDED

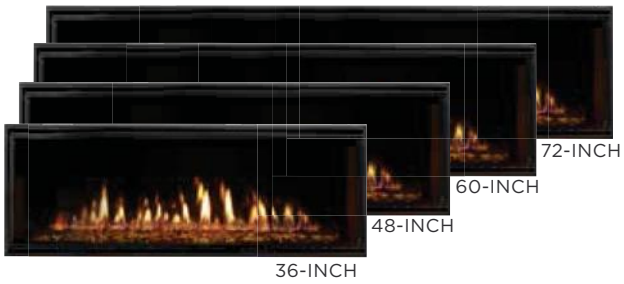

SEE-THROUGH

FRONT OPTIONS

QUATTRO[1]
An elegant four-piece design softly framing the view of the fire.

CLEAN FACE TRIM
A low-profile trim for a minimalist look. Also pairs well with custom wall treatments like stone or tile.

LOFT FORGE[1]
Hand-forged metal with riveted accents for an industrial aesthetic. At home in a rustic cabin or modern loft.

FINISHES[2]

BLACK

NEW BRONZE

BRUSHED NICKEL

INTERIOR OPTIONS

CRYSTAL GLASS

EBONY GLASS

AMBER GLASS

COBALT GLASS

SCARLET GLASS

ICED FOG GLASS

NATURAL LOGS[3]

1: Not available for 72-inch model 2: Loft Forge front available in hammered steel only. 3: Requires glass media

Reviewed for Code Compliance
Inspections Division
Approved with Conditions
Date: 10/31/17

MEZZO 36 shown with quattro in brushed nickel front and cobalt glass media.

MEZZO 60 shown with clean face trim in black and amber glass media.

MEZZO TECHNOLOGIES

INTELLIFIRE PLUS IGNITION SYSTEM

An advanced intermittent pilot ignition system with memory settings and a programmable wireless RC300 remote control. IPI Plus constantly monitors ignition, ensures safe functioning and conserves up to $10/month in energy costs.

DIRECT VENT TECHNOLOGY

Direct Vent fireplaces remove 100% of combustion exhaust and odors outside of the home. These sealed fireplaces provide optimal heat, conserve energy and ensure clean, safe indoor air quality.

CLEAR LED LIGHTING TECHNOLOGY

Superior performance and extended efficiency. This technology provides high-contrast, brilliant lighting to accentuate the flames. Can be used as mood lighting, with or without the flames.

FADE-RESISTANT BLACK GLASS INTERIOR

A clean modern look never gets dull. Just like this black glass interior. It's hot. And looks that way, too. For the life of your MEZZO.

HEAT ZONE TECHNOLOGY

Draw heat from the MEZZO into another room of the home, up to 20 feet away. When a heat zone kit is run continuously, it will redirect up to 25% of the fireplace's heat to another area, thus reducing wall temperatures above the fireplace. Two heat zones run continuously will redirect up to 50% of the fireplace's heat.

Reviewed for Code Compliance
Inspections Division
Approved with Conditions
Date: 10/31/17

MEZZO SPECIFICATIONS

MODEL	FRONT WIDTH		BACK WIDTH		HEIGHT		DEPTH		GLASS SIZE	BTU/HOUR INPUT (NG)
	UNIT	FRAMING	UNIT	FRAMING	UNIT	FRAMING	UNIT	FRAMING		
MEZZO36, MEZZO36ST	46-3/16 [1173]	48-1/4 [1226]	46-3/16 [1173]	48-1/4 [1226]	41-3/4 [1060]	42 [1067]	17-1/8 [435]	18-1/4 [464] **ST: 17 [432]**	35-1/2 x 12-1/2 [908 x 318]	17,500 - 30,000
MEZZO48, MEZZO48ST	58 [1473]	60-1/4 [1530]	58 [1473]	60-1/4 [1530]	41-3/4 [1060]	42 [1067]	17-1/8 [435]	18-1/4 [464] **ST: 17 [432]**	47-1/2 x 12-1/2 [1207 x 318]	21,000 - 40,000
MEZZO60, MEZZO60ST	70 [1778]	72-1/4 [1835]	70 [1778]	72-1/4 [1835]	47-3/4 [1213]	48 [1219]	17-1/8 [435]	18-1/4 [464] **ST: 17 [432]**	59-1/2 x 12-1/2 [1511 x 318]	26,000 - 50,000
MEZZO72, MEZZO72ST	82 [2083]	84-1/4 [2140]	82 [2083]	84-1/4 [2140]	47-3/4 [1213]	48 [1219]	17-1/8 [435]	18-1/4 [464] **ST: 17 [432]**	71-1/2 x 12-1/2 [1861 x 318]	30,000 - 58,000

LEFT SIDE VIEW

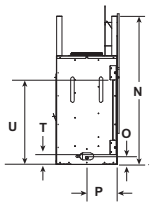

FRONT VIEW

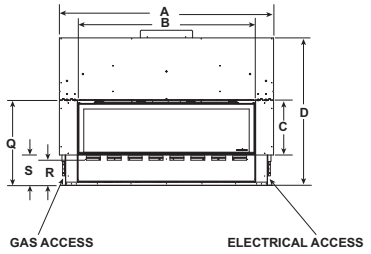

RIGHT SIDE VIEW

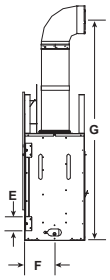

TOP VIEW - SEE-THROUGH

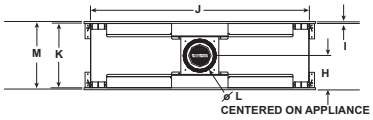

TOP VIEW - SINGLE-SIDED

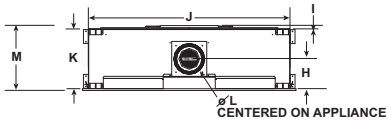

Model	A	B	C	D	E	F	G	H	I	J	K	L	M	N	O	P	Q	R	S	T	U
MEZZO36, MEZZO36ST	50 [1270]	39-1/4 [997]	15-5/8 [397]	42-1/2 [1080]	4 [102]	8-9/16 [217]	62 [1575]	8-9/16 [217]	1 [25] **ST: 1/2 [13]**	46-3/16 [1173]	17-1/8 [435]	8 [203]	18-5/8 [471] **ST: 18-1/8 [460]**	41-3/4 [1060]	2-3/8 [60]	8-9/16 [217]	24-1/2 [622]	7-1/4 [184]	8-7/8 [225]	2-3/4 [70]	23-3/4 [603]
MEZZO48, MEZZO48ST	62 [1575]	51-1/8 [1299]	15-5/8 [397]	42-1/2 [1080]	4 [102]	8-9/16 [217]	62 [1575]	8-9/16 [217]	1 [25] **ST: 1/2 [13]**	58 [1473]	17-1/8 [435]	8 [203]	18-5/8 [471] **ST: 18-1/8 [460]**	41-3/4 [1060]	2-3/8 [60]	8-9/16 [217]	24-1/2 [622]	7-1/4 [184]	8-7/8 [225]	2-3/4 [70]	23-3/4 [603]
MEZZO60, MEZZO60ST	74 [1880]	63-1/8 [1603]	15-5/8 [397]	48-1/2 [1232]	4 [102]	8-9/16 [217]	62 [1575]	8-9/16 [217]	1 [25] **ST: 1/2 [13]**	70 [1778]	17-1/8 [435]	8 [203]	18-5/8 [471] **ST: 18-1/8 [460]**	47-3/4 [1213]	2-3/8 [60]	8-9/16 [217]	24-1/2 [622]	7-1/4 [184]	8-7/8 [225]	2-3/4 [70]	23-3/4 [603]
MEZZO72, MEZZO72ST	86 [2184]	75-1/8 [1908]	15-5/8 [397]	48-1/2 [1232]	4 [102]	8-9/16 [217]	74 [1880]	8-9/16 [217]	1 [25] **ST: 1/2 [13]**	82 [2083]	17-1/8 [435]	8 [203]	18-5/8 [471] **ST: 18-1/8 [460]**	47-3/4 [1213]	2-3/8 [60]	8-9/16 [217]	24-1/2 [622]	7-1/4 [184]	8-7/8 [225]	2-3/4 [70]	23-3/4 [603]

Dimensions are in inches and millimeters. Product information is not complete and is subject to change without notice. Product installation must adhere strictly to instructions shipped with product. We recommend measuring individual units at installation. Assumes the use of 1/2" sheetrock. NOTE: Combustible material should not cover the face. Make sure you do NOT cover the decorative door opening.

Refer to installation manual for detailed specifications on installing this product. Heat & Glo® reserves the right to update units periodically. The flame and ember appearance may vary based on the type of fuel burned and the venting configuration used. Actual product appearance, including flame, may differ from product images.

U.S. EFFICIENCIES

Steady State - Since most homeowners use their fireplaces for an extended time while they are in the room, Steady State measures how efficiently your fireplace converts fuel to heat once it is warmed up and running in a "steady state".

AFUE - AFUE rating is more typically used with appliances, like your furnace, that continually cycle on and off to maintain a constant temperature.

RATING	MEZZO36	MEZZO36ST	MEZZO48	MEZZO48ST	MEZZO60	MEZZO60ST	MEZZO72	MEZZO72ST
STEADY STATE	**49.2% (NG), 49.2% (LP)**	**49.3% (NG), 49.3% (LP)**	**57.2% (NG), 57.2% (LP)**	**58.3% (NG), 58.3% (LP)**	**63.0% (NG), 64.1% (LP)**	**66.3% (NG), 67.7% (LP)**	**61.3% (NG), 63.1% (LP)**	**67.3% (NG), 69.3% (LP)**
AFUE	44.1% (NG), 48.5% (LP)	39.7% (NG), 49.3% (LP)	46.4% (NG), 56.1% (LP)	48.3% (NG), 57.3% (LP)	58.0% (NG), 59.7% (LP)	61.1% (NG), 63.3% (LP)	56.6% (NG), 59.0% (LP)	62.4% (NG), 65.1% (LP)

CANADA EFFICIENCIES

EnerGuide (CSA P.4.1-02) - EnerGuide is a rating used in Canada to measure annual fireplace efficiency.

RATING	MEZZO36	MEZZO36ST	MEZZO48	MEZZO48ST	MEZZO60	MEZZO60ST	MEZZO72	MEZZO72ST
ENERGUIDE (CSA P.4.1-02)	47.8% (NG), 50.8% (LP)	45.9% (NG), 50.1% (LP)	53.2% (NG), 56.3% (LP)	51.3% (NG), 57.0% (LP)	52.6% (NG), 52.2% (LP)	57.4% (NG), 56.1% (LP)	51.3% (NG), 49.9% (LP)	55.9% (NG), 57.7% (LP)

Reviewed for Code Compliance
Inspections Division
Approved with Conditions
Date: 10/31/17

For complete information on this model,
please contact us at:

HEAT & GLO®

No one builds a better fire

Web: heatnglo.com
Phone: (888) 427-3973 (952) 985-6000
E-mail: info@heatnglo.com

facebook.com/HeatandGlo
twitter.com/HeatandGlo
youtube.com/HeatandGlo

HNG-1134U-1114

LIMITED LIFETIME WARRANTY*

The strongest in the industry, Heat & Glo® provides a limited lifetime warranty on the most important aspects: firebox and heat exchanger.

*For full warranty details, go to www.heatnglo.com.

Fireplace glass and other surfaces get extremely HOT and can cause severe burns if touched. Do not remove the protective safety screen from the front of the glass. Keep a safe distance away. To learn more visit www.heatnglo.com/fireplacesafety

c UL US LISTED

Canada
ENERGUIDE
Look for the EnerGuide Gas Fireplace Energy Efficiency Rating in this brochure
Based on CSA P.4.1-02

AZ41E09DAB

GE Zoneline® Deluxe Series Cooling and Electric Heat Unit, 208/230 Volt

Dimensions and Installation Information (in inches)

Electrical Wiring

All wiring, including installation of receptacle, must be made in accordance with local electrical codes and regulations.

Note: Aluminum wiring may pose special problems – consult a qualified electrician.

Grille Options

Stamped Aluminum Grille – RAG60

Exterior Architectural Louvers Durable Polycarbonate:

RAG61 (Beige) RAG63 (Bittersweet)

RAG62 (Maple) RAG67 (Extruded Aluminum)

Retrofit Kits:

RAK901L – Wall Case Insulation for use with heat pumps.
RAK40 – Deflector Kit to adapt chassis for use with existing exterior architectural louvered grilles.

Wall Case Dimensions

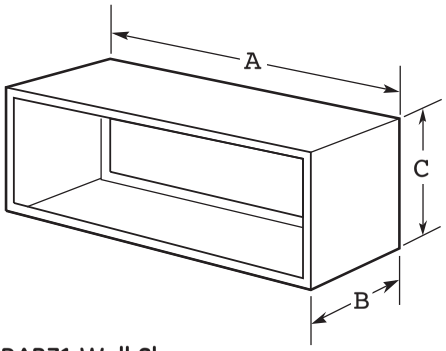

RAB71 Wall Sleeve

Heavy-gauge galvanized steel, with insulation.
A – 42", B – 13-3/4", C – 16"

RAB77 Wall Sleeve

Molded SMC fiberglass-reinforced polyester compound.
A – 42-1/8", B– 13-7/8", C – 16-1/4

Maximum Cord Extension (in inches)

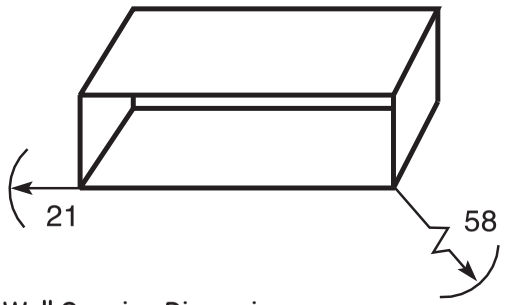

Wall Opening Dimensions

Add 1/4" to A and C dimensions for all cut-out size.
RAB71 16-1/4" Min. H x 42-1/4" Min. W
RAB71 available in 16", 24", 28" and 31" depths
RAB77 16-1/2" Min. H x 42-3/8" Min. W

Ducted Applications

4100 and 6100 series can be used with ductwork to heat or cool more than one room. RAK6052 Duct Adaptor is applied to top of case over air discharge/RAK601 Duct Extension is applied to right or left of adaptor. Locally fabricated ductwork may be added to extend to maximum recommended distance of 15 feet.

Electrical Connection

230/208 volt units may be plugged into a receptacle. 265 volt units are provided with a junction box and require direct connection. (NEC Requires 265V Direct Connection) See Architects and Engineers Design Data Manual for electrical connection information including use of sub-base for direct connected units. Installation must comply with local electrical codes and regulations.

Power Connection kits required on all Zoneline chassis.

For answers to your Monogram,® GE Profile™ or GE® appliance questions, visit our website at ge.com or call GE Answer Center® service, 800.626.2000.

230/208 Volt Line Cord Connected Units

Line Cord Kit	Electric Heat (Btuh)	Electric Heater Watts	Electric Heat Amps	Min. Circuit Protection (Amps)
RAK3153A	8,600/7,100	2,550/2,090	11.6/10.6	15
RAK3203A	11,700/9,600	3,450/2,820	15.5/14.1	20
RAK3303A	17,000/13,900	5,000/4,090	22.3/20.3	30

230/208 Volt Sub-Base Connected Units

Sub-Base	Electric Heat (Btuh)	Electric Heater Watts	Electric Heat Amps	Min. Circuit Protection (Amps)
RAK204D15P	8,600/7,100	2,550/2,090	11.6/10.6	15
RAK204D20P	11,700/9,600	3,450/2,820	15.5/14.1	20
RAK204D30P	17,000/13,900	5,000/4,090	22.3/20.3	30

imagination at work

Specification Revised 4/14

Date: 10/31/17
Reviewed for Code Compliance
Inspections Division
Approved with Conditions
CITY OF PORTLAND, MAINE

AZ41E09DAB

GE Zoneline® Deluxe Series Cooling and Electric Heat Unit, 208/230 Volt

Features and Benefits

- 9,700/9,600 BTU cooling capacity
- 12.0/12.0 E.E.R.
- Electronic touch controls with LED display
- 2.7 dehumidification (pints/hr.)
- 340/229 CFM indoor fan (high/low)
- 70/45 vent CFM
- R-410A refrigerant
- Electronic 7-step temperature limiting to prevent overcooling or overheating of room
- Heat Sentinel
- 29 Sound Transmission Class (STC)
- Warm Grey Beige

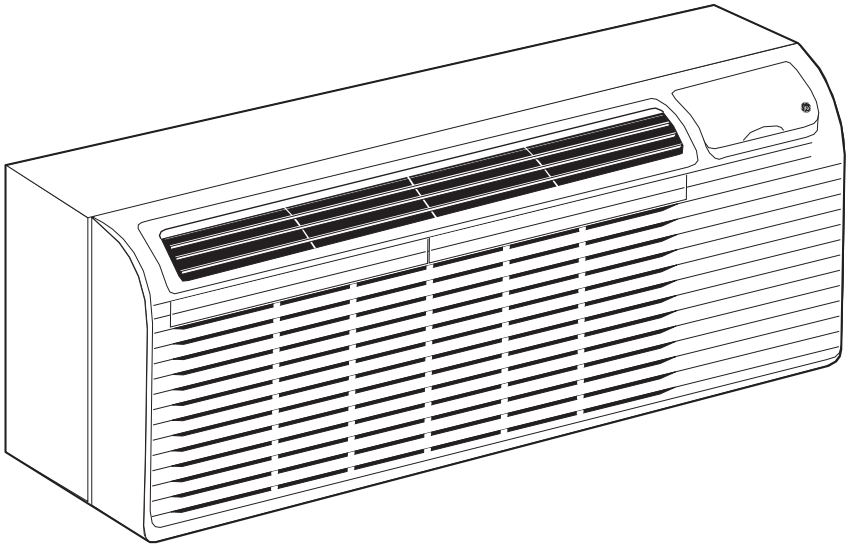

For answers to your Monogram,® GE Profile™ or GE® appliance questions, visit our website at ge.com or call GE Answer Center® service, 800.626.2000.

imagination at work

Specification Revised 4/14

Reviewed for Code Compliance
Inspections Division
Approved with Conditions
Date: 10/31/17
CITY OF PORTLAND, MAINE