PINE TREE SHOPPING CENTER
EXTERIOR CANOPY AND FACADE RENOVATIONS

BRIGHTON AVENUE AND RAND AVENUE
PORTLAND, MAINE

OWNER:
CENTRO HERITAGE SPE 4LLC
40 SKOKIE BLVD. SUITE 600, NORTHBROOK, IL 60062
www.centrowatt.com

ARCHITECT:
SCHNEE ARCHITECTS, INC.
339 AUBURN STREET, AUBURNDALE, MA. 02466
PHONE: 617-630-1900 FAX: 617-630-1959
www.schneearch.com

STRUCTURAL ENGINEER:
FLOOD CONSULTING
56 LAUREL DRIVE, HUDSON, MA. 01749
PHONE: 978-562-6499 FAX: 978-562-6246

GENERAL NOTES

1. ALL WORK TO CONFORM WITH THE REQUIREMENTS OF THE INTERNATIONAL BUILDING CODE, 2003 EDITION, AND OTHER APPLICABLE CODES AND STANDARDS, INCLUDING, BUT NOT LIMITED TO, NFPA FIRE CODES, THE LOCAL PLUMBING, ELECTRICAL, AND MECHANICAL CODES, THE AMERICANS WITH DISABILITIES ACT, ETC.

2. THE CONTRACTOR SHOULD INSPECT THE PROPOSED CONSTRUCTON AREA PRIOR TO PRICING AND BEGINNING THE WORK. COORDINATION WITH EXISTING SYSTEMS AND REMOVAL/RELOCATION OF ANY OBSTRUCTIONS SHOULD BE INCLUDED IN PRICING. ANY DISCREPANCIES BETWEEN FIELD CONDITIONS AND CONSTRUCTION DOCUMENTS SHOULD BE BROUGHT TO THE ATTENTION OF THE ARCHITECT. DO NOT PROCEED WITH UNRESOLVED ITEMS WITHOUT CONSENT OF THE ARCHITECT.

3. THE CONTRACTOR SHALL, PRIOR TO COMMENCEMENT OF THE WORK, FURNISH CERTIFICATES EVIDENCING THAT THE FOLLOWING INSURANCE LIMITS ARE IN EFFECT, NAMING THE OWNER AS AN ADDITIONAL INSURED, AND REFERENCING THE PROJECT BY NAME AND ADDRESS: WORKMEN'S COMPENSATION = STATUTORY LIMITS, AND COMPREHENSIVE GENERAL LIABILITY = $2,000,000.

4. THE CONTRACTOR SHALL SECURE AND PAY FEES FOR ALL NECESSARY PERMITS AND LICENSES, AND SHALL COORDINATE ALL INSPECTIONS BY AUTHORITIES HAVING JURISDICTION OVER THE WORK.

5. THE CONTRACTOR SHALL USE ONLY WORKERS PROPERLY SKILLED AND EQUIPPED FOR THE VARIOUS TRADES OPERATIONS REQUIRED. CONTRACTOR SHALL CONFIRM UNION LABOR REQUIREMENTS PRIOR TO SUBMISSION OF BID.

6. THE CONTRACTOR SHALL MAINTAIN THE SITE IN A SECURE, CLEAN, SAFE AND ORDERLY CONDITION AT ALL TIMES, CONTAINING ALL DUSTS AND NUISANCES AND SHALL DISPOSE OF ALL RUBBISH AND DEMOLITON/SCRAP MATERIALS IN LEGAL, OFF-SITE DISPOSAL AREAS. PROVIDE NECESSARY ENCLOSURES, SIGNAGE AND PROTECTION AROUND THE WORK AREA, INCLUDING BUSINESSES THAT ARE TO REMAIN OPEN DURING CONSTRUCTION.

7. AS A CONDITION OF FINAL PAYMENT, THE CONTRACTOR SHALL FURNISH A GENERAL RELEASE OF LIEN.

8. THE CONTRACTOR SHALL PROVIDE TO THE OWNER A GUARANTEE OF NOT LESS THAN ONE YEAR ON ALL WORK, FROM THE DATE OF SUBSTANTIAL COMPLETION, OR STATUTORY LIMITS, WHICHEVER IS GREATER, UNLESS OTHERWISE SPECIFICALLY NOTED. ANY DEFECTS IN MATERIALS AND WORKMANSHIP OCCURING WITHIN THIS PERIOD SHALL BE CORRECTED BY THE CONTRACTOR AT NO ADDITIONAL COST TO THE OWNER.

9. THE CONTRACTOR SHALL INCLUDE ALL PROFIT, OVERHEAD AND TAXES, WHICH SHOULD BE ADDED TO ALLOWANCE FIGURES, WHEN QUOTED. CONTRACTOR SHOULD INCLUDE WITH BID A PROPOSED PROFIT AND OVERHEAD MARKUP TO BE APPLIED TO ANY CHANGE ORDERS WHICH MAY OCCUR.

10. THE CONTRACTOR IS TO PROVIDE ALL NECESSARY BLOCKING TO ACCOMPLISH THE WORK AS SHOWN.

11. ALL FINISHES SHALL MEET OR EXCEED FIRE CODE REQUIREMENTS, CONSTRUCTION TO CONFORM TO ALL APPLICABLE FIRE RESISTIVE CONSTRUCTION REQ'TS.

13. ALL MECH., ELECT., PLUMBING AND FIRE PROTECTION ENGINEERING AND WORK TO BE PERFORMED BY THE CONTRACTOR AND LICENSED SUBS, IN CONFORMANCE WITH ALL APPLICABLE CODES AND STANDARDS. PROVIDE SSWITCHES, CONTROLS AND RECEPTACLES AS REQUIRED BY CODE. PROVIDE SHOP AND RECORD DRAWINGS TO OWNER AND ARCHITECT SHOWING CIRCUITRY AND EQUIPMENT LOCATIONS. PROVIDE CODE-REQUIRED POWER, SWITCHES, LIGHTS AND ALARM DEVICES.

14. ALL SITE WORK INDICATED ON DRAWINGS, INCLUDING, BUT NOT LIMITED TO SIDEWALKS, UTILITY CONNECTIONS, ELECTRIC SERVICE, LANDSCAPE, CURBS, PAVEMENT STRIPING, ETC. SHALL BE BY OTHERS UNLESS NOTED OTHERWISE.

15. PROVIDE EMERGENCY LIGHTING, EXIT SIGNS, VISUAL STROBES, HORNS AND PULL STATIONS AS REQUIRED BY CODE. CONFIRM WITH LOCAL FIRE DEPARTMENT.

16. ALL DIMENSIONS ARE TO FACE OF MASONRY OR WALL FINISH U.N.O. (UNLESS NOTED OTHERWISE).

17. METAL STUDS SHALL MEET MFR'S. ENGINEERING DESIGN FOR SIZE, GAUGE, SPACING AND BRACING.

18. SLOPES AT CURB CUTS AND RAMPS SHALL NOT EXCEED 1:12 (8.33%). CROSS SLOPES SHALL NOT EXCEED 1:50 (2%).

19. TENANT STORES TO REMAIN OPEN DURING DEMOLTION AND CONSTRUCTION. CONTRACTOR COORDINATE THE WORK WITH LANDLORD AND EXISTING TENANTS.

SYMBOLS

Symbol	Meaning
A / A202	BUILDING SECTION LETTER; SHEET WHERE DRAWN, TYP
1 / A601	SECTION NUMBER
2 / A601	DETAIL NUMBER
B	COLUMN LINE
100	DOOR NUMBER
P-1	KEYED NOTE
	ELEVATION TAG
1 / A101 TYP.	BUILDING SECTIONS
	EARTH
	GRAVEL
	CONCRETE
	CONCRETE MASONRY UNIT
	METAL (LARGE SCALE)
	METAL (SMALL SCALE)
	PLYWOOD
	WOOD FINISHED
	WOOD ROUGH
	INSULATION (BATT OR LOOSE)
	INSULATION (RIGID)
	GYPSUM BOARD, CEMENT, GROUT
	CERAMIC TILE, ACOUSTICAL TILE
	EXSITING STRUCTURE TO REMAIN

ABBREVIATIONS

A	AMPERE
AC	ABOVE COUNTER
ACE	ADVANCED CONSUMER ELECTRONICS
ACST	ACOUSTIC (AL)
AD	AREA DRAIN
ADD.	ADDENDUM
ADJ.	ADJACENT
ADJT	ADJUSTABLE
AFF	ABOVE FINISH FLOOR
AIC	AMPERE INTERRUPTING CAPACITY
AL	ALUMINUM
ALT	ALTERNATE
ALUC	ALUCOBOND
AMP	AMPERE
AP	ACCESS PANEL
APPROX	APPROXIMATE
ARCH	ARCHITECT (URAL)
ASPH	ASPHALT
ASTM	AMERICAN SOCIETY FOR TESTING AND MATERIALS
BAL	BALANCE
BD	BOARD
BET.	BETWEEN
BIT.	BITUMINOUS
BKR	BREAKER
BLDG	BUILDING
BLKG	BLOCKING
BM	BEAM
BOT	BOTTOM
BRIDG	BRIDGING
BRG	BEARING
BS	BOTH SIDES
BTU	BRITISH THERMAL UNIT
BUR.	BUILT UP ROOFING
CAB.	CABINET
CAP.	CAPACITY
CB	CIRCUIT BREAKER
CFM	CUBIC FEET PER MINUTE
CI	CAST IRON
CJ	CONTROL JOINT
CKT	CIRCUIT
CLG	CEILING
CLO	CLOSET
CLR	CLEAR
CMU	CONCRETE MASONRY UNIT
CO	CLEANOUT
COL.	COLUMN
CONC	CONCRETE
CONN	CONNECTION
CONST	CONSTRUCTION
CONT	CONTINUOUS
CONTR	CONTRACTOR
COP	COPPER
CPT	CARPET (ED)
CSK	COUNTERSUNK
CT	CERAMIC TILE
CW	COLD WATER, CONTROL WIRE
E	EAST
EA	EACH
EIFS	EXTERIOR INSULATED FINISH SYSTEM
EJ	EXPANSION JOINT
EL	ELEVATION
ELEC	ELECTRIC (AL)
ENC	ENCLOSE (URE)
EMER	EMERGENCY
EP	ELECTRICAL PANEL
EQ.	EQUAL
EQUIP.	EQUIPMENT
EW	EACH WAY
EWC	ELECTRIC WATER COOLER
EXH	EXHAUST
EXIST.	EXISTING
EXP	EXPANSION; EXPOSED
EXT	EXTERIOR
F	FAHRENHEIT
FA	FIRE ALARM
FD	FLOOR DRAIN; FIRE DAMPER
FDN	FOUNDATION
FE	FIRE EXTINGUISHER
FFE	FURNITURE, FIXTURES AND EQUIPMENT
FH	FIRE HYDRANT
FIN.	FINISH (ED)
FL	FLOOR; FULL LENGTH
FLG	FLASHING
FLUOR	FLUORESCENT
F/O	FACE OF

F/O	FACE OF
FPM	FEET PER MINUTE
FR	FIRE RETARDANT
FRP	FIBERGLASS REINFORCED PANEL
FT	FOOT, FEET
FTG	FOOTING
FTR	FLUE THRU ROOF
FUR.	FURRING (ED)
GA	GAGE
GALV	GALVANIZED
GC, GCC	GENERAL CONTRACTOR
GEN	GENERAL
GL	GLASS
GPM	GALLONS PER MINUTE
GR	GRADE
GRD	GROUND
GYP	GYPSUM
GFCI	GROUND FAULT CIRCUIT INTERRUPTER
HCP, HP	HANDICAPPED
HDW	HARDWARE
HDWD	HARDWOOD
HM	HOLLOW METAL
HORIZ	HORIZONTAL
HP	HORSEPOWER; HIGHPOINT
HT	HEIGHT
HVAC	HEATING/VENTILATING/ AIR CONDITIONING
HW	HOT WATER
HWH	HOT WATER HEATER
KV	KILOVOLT
KVA	KILOVOLT – AMPERE
KW	KILOWATT
LAM	LAMINATE (D)
LAV	LAVATORY
LBS	POUNDS
LC	LIGHT CONTACTOR
LF	LINEAR FEET
LG	LONG; LENGTH
LP	LIGHTING PANEL
LTG	LIGHTING
LV	LOW VOLTAGE
MAS	MASONRY
MATL	MATERIAL
MAX	MAXIMUM
MBH	THOUSAND BTU PER HOUR
MCC	MOTOR CONTROL CENTER
MDP	MAIN DISTRIBUTION PANEL
MECH	MECHANICAL
MED	MEDIUM
MET.	METAL
MFR	MANUFACTURER
MGR	MANAGER
MIN	MINIMUM
MISC	MISCELLANEOUS
MLO	MAIN LUGS ONLY
MO	MASONRY OPENING
MTD	MOUNTED
MTG	MOUNTING
N	NORTH
NIC	NOT IN CONTRACT
NO.	NUMBER
NOM	NOMINAL
NTS	NOT TO SCALE
OC	ON CENTER
OD	OUTSIDE DIAMETER
OFF	OFFICE
OPNG	OPENING
OPP	OPPOSITE
OPS	OPERATIONS
OVHD	OVERHEAD
PCF	POUNDS PER CUBIC FOOT
PCP	PRECAST CONC. PANEL
PH	PHASE
PL	PLATE
PLAM	PLASTIC LAMINATE
PLAS	PLASTER
PLMB	PLUMBING
PLYWD	PLYWOOD
PNL	PANEL
POST	POINT OF SALE TERMINAL
PP	POWER PANEL
R	RADIUS; RISER
RD	ROOF DRAIN
REINF	REINFORCEMENT

REQD	REQUIRED
RESIL	RESILIENT
REV	REVISION
RL	RAIN LEADER
RM	ROOM
RTU	ROOF TOP UNIT
RO	ROUGH OPENING
RP	RECEPTACLE PANEL
S	SOUTH
SAN	SANITARY
SATC	SUSPENDED ACOUSTICAL TILE CEILING
SCHED	SCHEDULE (D)
SECT	SECTION
SF	STOREFRONT
SH	SHEET
SIM	SIMILAR
SQ	SQUARE
SS	STAINLESS STEEL
ST	STREET
STD	STANDARD
STL	STEEL
STOR	STORAGE
STS	SECURITY/TELEPHONE SYSTEM
SUSP	SUSPENDED
SW	SWITCH
SWGR	SWITCHGEAR
SYM	SYMMETRY (ICAL)
SYS	SYSTEM
T	TREAD
TEL	TELEPHONE
TEMP	TEMPERATURE; TEMPORARY
THK	THICK (NESS)
THR	THRESHOLD
THRU	THROUGH
T/O	TOP OF
TOW	TOP OF WALL
TS	TIME SWITCH
TYP	TYPICAL
TR	TREATED
TV	TELEVISION
UC	UNDER COUNTER
UG	UNDERGROUND
UH	UNIT HEATER
UL	UNDERWRITER'S LABORATORY
UNO	UNLESS NOTED OTHERWISE
V	VOLT
VA	VOLT-AMP
VC	VACUUM CLEANER
VCT	VINYL COMPOSITION TILE
VERT	VERTICAL
VP	VENT PIPE
VTR	VENT THRU ROOF
VWC	VINYL WALL COVERING

LOCUS MAP (NO SCALE)

NORTH

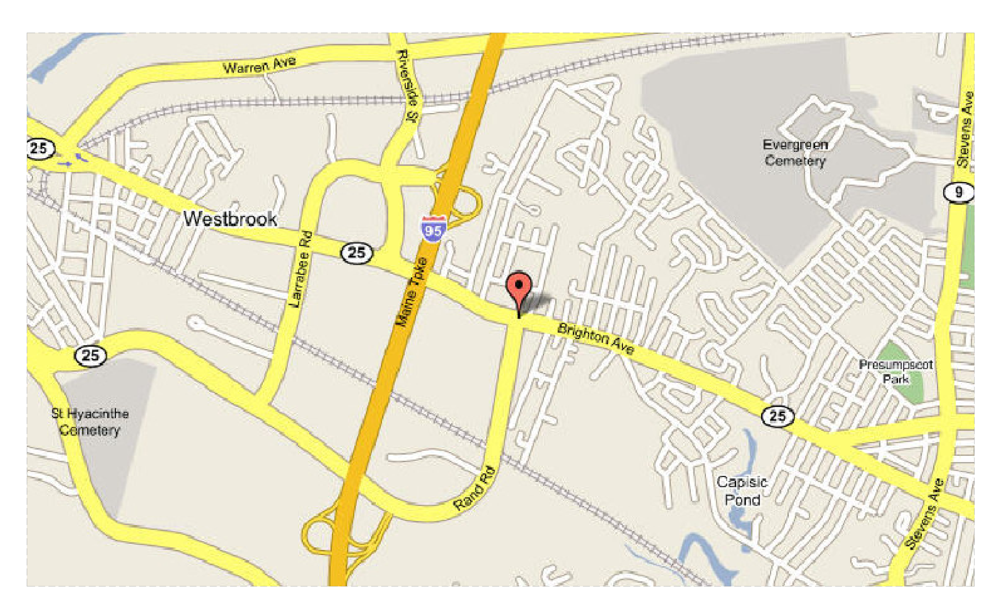

LIST OF DRAWINGS

GENERAL

A001	COVER SHEET, GENERAL NOTES, ABBREVIATIONS

ARCHITECTURAL

A101	FLOOR PLANS
A102	REFLECTED CEILING PLANS
A103	ROOF PLAN
A201	BUILDING ELEVATIONS
A301	SECTIONS/DETAILS
A302	SECTIONS/DETAILS
SP100	SPECIFICATIONS
SP101	SPECIFICATIONS

STRUCTURAL

S100	STRUCTURAL PLAN AND DETAILS
S102	GENERAL NOTES AND DETAILS

DESIGN DATA

THIS FACADE DESIGN IS BASED ON THE FOLLOWING DESIGN ASSUMPTIONS:

BUILDING CLASSIFICATIONS AND DATA

APPLICABLE CODES:
2003 INTERNATIONAL BUILDING CODE
2003 INTERNATIONAL PLUMBING CODE
AMERICAN DISABILITIES ACT
NATIONAL ELECTRICAL CODE, CURRENT EDITION
THE NATIONAL FIRE PROTECTION ASSOCIATION
LIFE SAFETY CODE, NFPA 101 AND NFPA 72, NAT'L. FIRE ALARM CODE
THE NATIONAL FIRE PROTECTION ASSOCIATION CODE, NFPA 13 & 231C

OCCUPANCY GROUP CLASSIFICATION (PER ICC CHAPTER 3):
USE GROUP A2 – ASSEMBLY
USE GROUP B – BUSINESS
USE GROUP M – MERCANTILE

TYPE OF CONSTRUCTION CLASSIFICATION:
TYPE 2B, FULLY SPRINKLERED

SITE ADDRESS:
1100 BRIGHTON AVENUE
PORTLAND, ME 04102-1030

PRICING NOTES

P1. SEE GENERAL NOTES THIS SHEET FOR FURTHER INFORMATION.

P2. EXTERIOR WALL SCONCE TO BE BL-38 AS MANUFACTURED BY ALLLIGHTING, 2930 SOUTH FAIRVIEW STREET, SANTA ANA, CA, PH. 714-668-1107.

P3. UNDER CANOPY LIGHT FIXTURE TO BE6783WH213N1 AS MANUFACTURED BY LIGHTOLIER, 631 AIRPORT ROAD, FALL RIVER, MA PH. 508-679-8131.

P4. ALLOW THE SUM OF $75,000 FOR RENOVATIONS TO THE EXISTING SHOPPING CENTER PYLON SIGN.

BID ALTERNATES

ALTERNATE #1:
INCLUDE IN THE BASE BID A PRICE TO PROVIDE/INSTALL DECORATIVE PILASTERS ACROSS THE NORTH AND WEST FACADES AT THE EXISTING KEY BANK.

ALTERNATE #2:
INCLUDE IN THE BASE BID A PRICE TO ELECTROSTATICALLY PAINT EXISTING MILL FINISH ALUMINUM STOREFRONT SCHEDULED TO REMAIN. THE ALUMINUM IS TO BE PAINTED TO MATCH A MEDIUM BRONZE FINISH.

SITE DETAILS

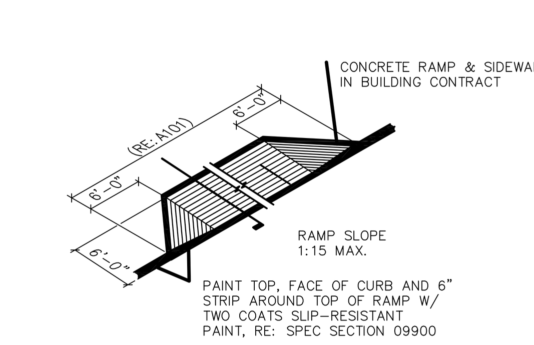

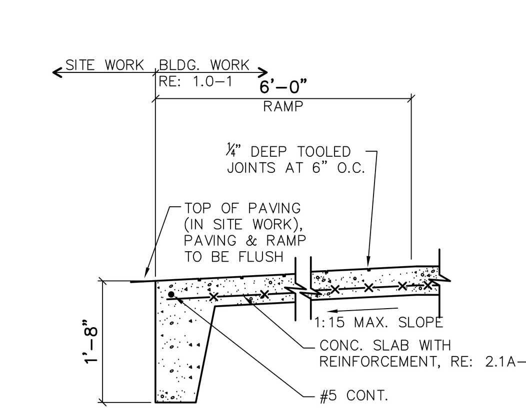

Rev. #	Issue	Description	Date	Rev. #	Issue	Description	Date
0	05/14/07	BID					

Drawing Description	FACADE IMPROVEMENTS COVER SHEET
Market/Project Name	PINE TREE SHOPPING CENTER, BRIGHTON AVE., PORTLAND, ME
Des./Dftr	GWS
Drawn By	RMS/GWS
Checked By	GWS
Scale	AS NOTED
Date	05/14/2007
Approved	
Seal	
A/E Project No.	05120
Architect/Engineer	SCHNEE ARCHITECTS INCORPORATED, 339 AUBURN ST. SUITE 8 NEWTON, MA 02466, TEL: 617-630-1900 FAX: 617-630-1959
OWNER:	CENTRO HERITAGE SPE 4LLC, 40 SKOKIE BLVD., SUITE 600, NORTHBROOK, IL 60062
State	ME
Site	PINE TREE
Phase	BID
Sheet No.	A001