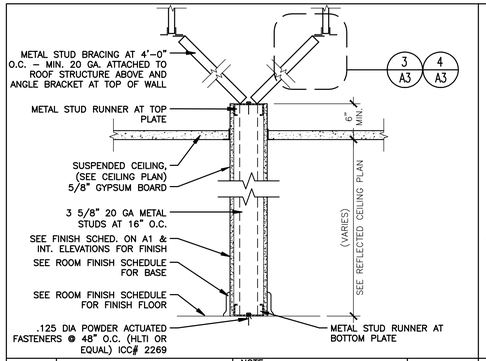

1 WALL PARTITION

NOTE: REFER TO 12/A3 FOR STUD GAUGE LIMITING HEIGHT SCHEDULE FOR ASSEMBLY

NTS

NOTE: SEE PLUMBING SHEETS AND EQ SHEETS FOR ADDITIONAL INFORMATION, INCLUDING SPECIFICATIONS ON EQUIPMENT AND FIXTURES USED.

1. INSULATE ANY EXPOSED PIPING
2. FAUCETS SHALL BE PUSH / LEVER OR ELECTRONIC CONTROL TYPE
3. ELIMINATE SHARP EDGES OR CORNERS BELOW LAVATORY

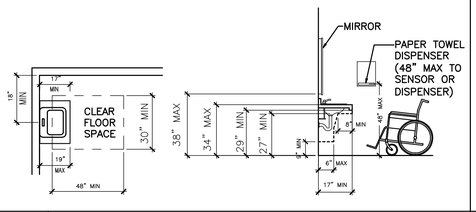

5 LAV REQ'D CLEARANCES N.T.S.

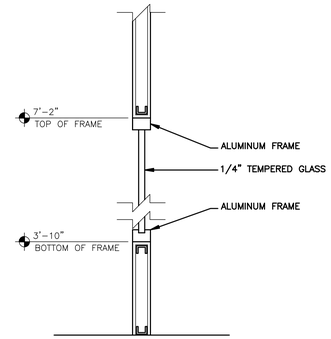

9 TYP. GLAZING DETAIL SCALE: 1" = 1'-0"

A. TABLE BELOW IS BASED ON UNIVERSAL INDUSTRIES, UNIMAST (USG) CORPORATION'S LIMITING HEIGHT TABLE FOR EMBRACED STUDS SPACED 16" AND 24" O.C. (SYSTEM FOLDER SA-923-1990 EDITION). REQUIREMENT FOR 5 PSF LATERAL PRESSURE AND 1/240 ALLOWABLE DEFLECTION FOR FLEXIBLE FINISHES, WITH 1 LAYER OF GYP. BD. PER SIDE OF STUD.

B. SCHEDULED HEIGHTS MAY BE INCREASED BY 50% WHERE THE STUDS ARE DIAGONALLY BRACED AT THE MAXIMUM HEIGHT POINT TO THE STRUCTURE ABOVE @ 4'-0" O.C.

C. CAUTION! WHEN USING STUDS MANUFACTURED BY A COMPANY OTHER THEN USG. VERIFY MANUFACTURERS STUD STRENGTH AND LIMITING HEIGHT. ADJUST GAUGE AND MAXIMUM HEIGHT RECOMMENDED BY MANUFACTURER'S CURRENT PRINTED SPECIFICATION.

STUD WIDTH	STUD TYPE	STUD GAUGE	STUD SPACING	MAXIMUM HEIGHT
1-5/8"	158ST25	25	16"	9'-6"
	158ST25	25	24"	7'-3"
2-1/2"	212ST25	25	16"	12'-6"
	212ST25	25	24"	10'-9"
	212ST22	22	16"	13'-0"
	212ST22	22	24"	11'-6"
	212ST20	20	16"	14'-0"
	212ST20	20	24"	12'-3"
3-5/8"	358ST25	25	16"	16'-0"
	358ST25	25	24"	13'-6"
	358ST22	22	16"	17'-3"
	358ST22	22	24"	15'-0"
	358ST20	20	16"	18'-3"
	358ST20	20	24"	16'-0"
6"	600ST25	25	16"	20'-0"
	600ST25	25	24"	15'-0"

12 STUD GAUGE SCHEDULE N.T.S.

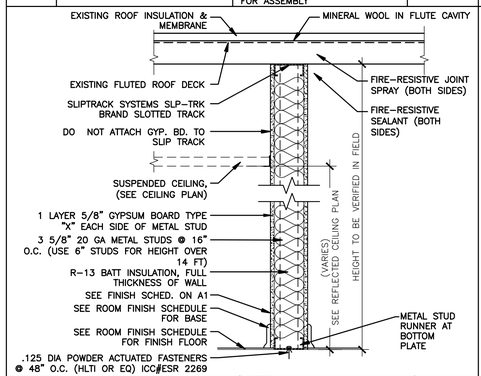

2 1 HR RATED WALL ASSEMBLY

NOTE: REFER TO 12/A3.0 FOR STUD GAUGE LIMITING HEIGHT SCHEDULE FOR ASSEMBLY

NTS

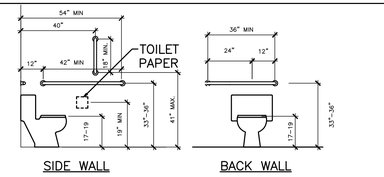

1. GRAB BARS MUST SUPPORT A LOAD OF 250 POUNDS.
2. STALL PARTITIONS SHALL PROVIDE MIN 9" TOE SPACE

NOTE: BLOCKING IS REQUIRED FOR ALL HANDICAP GRAB BARS

NOTE: LAV FIXTURES SHALL NOT EXTEND INTO THE REQUIRED CLEAR SPACE FOR THE WATER CLOSETS

6 REST ROOM CLEARANCES N.T.S.

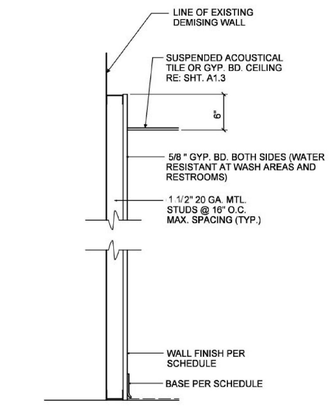

10 FURRED WALL DETAIL SCALE: 1" = 1'-0"

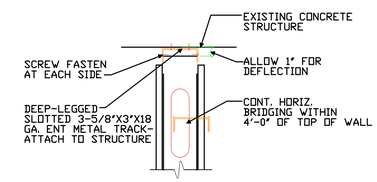

13 REFLECTION DETAIL N.T.S.

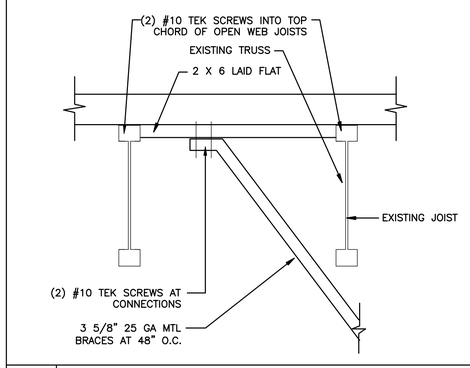

3 BRACE AT DECK N.T.S.

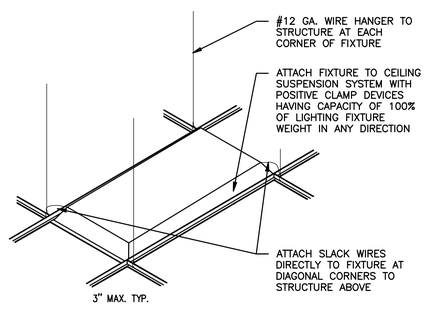

7 LIGHT FIXTURE BRACING SCALE: NONE

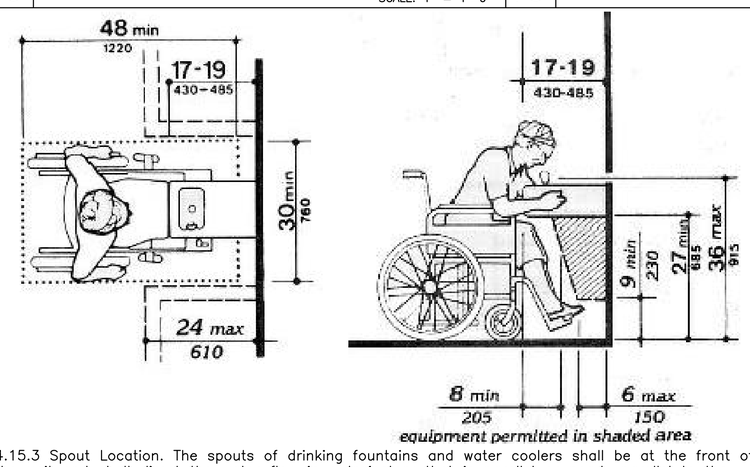

4.15.3 Spout Location. The spouts of drinking fountains and water coolers shall be at the front of the unit and shall direct the water flow in a trajectory that is parallel or nearly parallel to the front of the unit. The spout shall provide a flow of water at least 4 in (100 mm) high so as to allow the insertion of a cup or glass under the flow of water. On an accessible drinking fountain with a round or oval bowl, the spout must be positioned so the flow of water is within 3 in (75 mm) of the front edge of the fountain.

4.15.4 Controls. Controls shall comply with 4.27.4. Unit controls shall be front mounted or side mounted near the front edge.

4.15.5 Clearances.
(1) Wall- and post-mounted cantilevered units shall have a clear knee space between the bottom of the apron and the floor or ground at least 27 in (685 mm) high, 30 in (760 mm) wide, and 17 in to 19 in (430 mm to 485 mm) deep. Such units shall also have a minimum clear floor space 30 in by 48 in (760 mm by 1220 mm) to allow a person in a wheelchair to approach the unit facing forward.

11 ADA DRINKING FOUNTAIN SCALE: 3/4" = 1'-0"

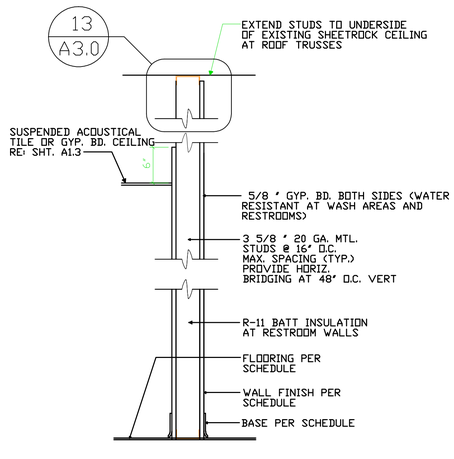

14 WALL TYPE '5/A1.0' N.T.S.

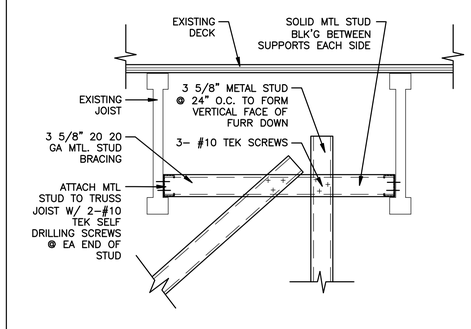

4 BRACE AT ROOF FRAMING N.T.S.

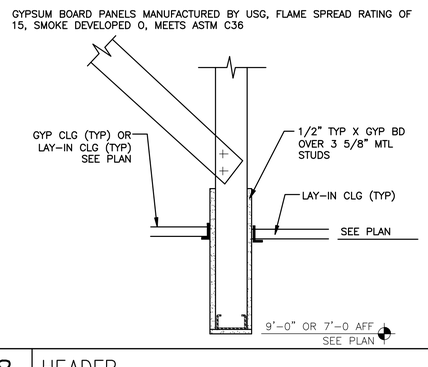

8 HEADER

THE CONTENTS OF REMAIN THE PROP GROUP, PC, ITS CO INFORMATION, BHA USING ANY MEANS WRITTEN CONSENT FROM TEDROW DE

CITY OF PORTLAND, MAINE — RESURGAM

Reviewed for Code Compliance Inspections Division Approved with Conditions

Date: 10/16/15

WORKOUT ANYTIME

Pine Tree Shopping Center
1100 Brighton Avenue
Unit 12
Portland, ME 04102

Thomas F. Tedrow, AIA
2866 Adams Brook Way
Snellville, Georgia 30078
Phone. 678.777.9548

LICENSED ARCHITECT TEDROW ARC4280 STATE OF MAINE

REV. NO.	DATE	DESCRIPTION
1		

ISSUE DATE: 08-24-15 RELEASED FOR CONSTRUCTION

DETAILS

A3.0