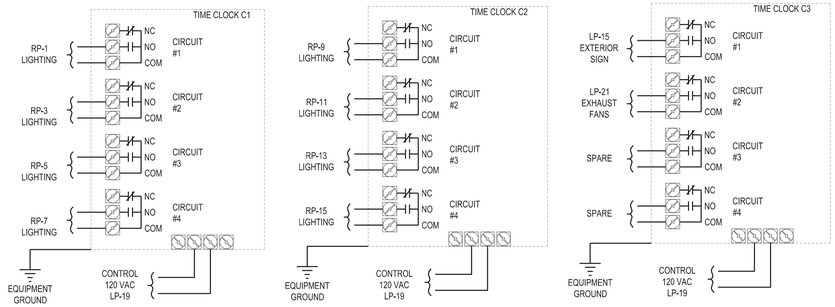

TIME CLOCK DETAILS

NO SCALE

LOAD SUMMARY

VOLTAGE: 208 Y/ 120V

CIRCUIT DESCRIPTION	PANEL LP	PANEL RP		CONNECTED	DEMAND
LIGHTING	1.2	7.7		8.86	11.07
RECEPTACLE	19.6	24.7		44.36	27.18
MOTOR	0.4	0.0		0.36	0.86
HEATING	4.0	0.0		4.00	4.00
COOLING	32.8	0.0		32.82	32.82
			NEW TOTAL DIVERSIFIED KVA		76
			NEW TOTAL DIVERSIFIED AMPS		211

PANEL NAME: LP — LOCATION: MAIN ELECTRICAL ROOM — VOLTAGE: 208 Y/ 120V 3 PHASE — 400A MCB — MOUNTING / ENCLOSURE: SURFACE / NEMA 1 — NEW PANELBOARD — SERVICE ENTRANCE RATED

AMPS	POLES	TYPE	CIRCUIT DESCRIPTION	KVA	CKT	A	B	C	CKT	KVA	CIRCUIT DESCRIPTION	TYPE	POLES	AMPS
60*	3	AC	RTU-1	5.47	1	16.47			2	11.00	PANELBOARD RP		3	150
		AC		5.47	3		15.71		4	10.24				
		AC		5.47	5			16.63	6	11.16				
60*	3	AC	RTU-2	5.47	7	7.77			8	2.30	TANNING BED	R	3	30
		AC		5.47	9		7.77		10	2.30		R		
		AC		5.47	11			7.77	12	2.30		R		
20	1	R	ROOF TOP RECEPS	0.36	13	2.66			14	2.30	TANNING BED	R	3	30
20	1	L	EXTERIOR SIGN	1.20	15		3.50		16	2.30		R		
20	1	R	RECEP TAN/HYDRO RM	0.36	17			2.66	18	2.30		R		
20	1	R	TIME CLOCKS	0.10	19	2.10			20	2.00	WATER HEATER	H	2	30
20	1	M	EF-1	0.36	21		2.36		22	2.00		H		
20	1	H	HAND DRYER	1.00	23			3.50	24	2.50	HYDRO MASSAGE	R	2	30
20	1	H	HAND DRYER	1.00	25	3.50			26	2.50		R		
20	1		SPARE		27				28		SPARE		1	20
20	1		SPARE		29				30		SPARE		1	20
20	1		SPARE		31				32		SPARE		1	20
20	1		SPARE		33				34		SPARE		1	20
20	1		SPARE		35				36		SPARE		1	20
20	1		SPARE		37				38		SPARE		1	20
20	1		SPARE		39				40		SPARE		1	20
20	1		SPARE		41				42		SPARE		1	20
			PHASE TOTAL	32.5	29.3	30.6			KVA					

*PROVIDE HACR TYPE CIRCUIT BREAKER

TOTAL CONNECTED LOAD 92 KVA 256 A
TOTAL DEMAND LOAD 82 KVA 229 A

PANEL NAME: RP — LOCATION: MAIN ELECTRICAL ROOM — VOLTAGE: 208 Y/ 120V 3 PHASE — 225A MLO — MOUNTING / ENCLOSURE: SURFACE / NEMA 1 — NEW PANELBOARD

AMPS	POLES	TYPE	CIRCUIT DESCRIPTION	KVA	CKT	A	B	C	CKT	KVA	CIRCUIT DESCRIPTION	TYPE	POLES	AMPS
20	1	L	LIGHTING	1.28	1	1.64			2	0.36	RECEP FRONT DESK	R	1	20
20	1	L	LIGHTING	1.28	3		1.64		4	0.36	RECEP FRONT DESK	R	1	20
20	1	L	LIGHTING	1.28	5			2.36	6	1.08	GENERAL RECEP	R	1	20
20	1	L	LIGHTING	0.28	7	0.82			8	0.54	RECEP TV	R	1	20
20	1	L	LIGHTING	0.52	9		1.06		10	0.54	RECEP TV	R	1	20
20	1	L	LIGHTING	0.62	11			1.34	12	0.72	RECEP OFFICE	R	1	20
20	1	L	LIGHTING	1.20	13	1.56			14	0.36	RECEP TELEPHONE BD	R	1	20
20	1	L	LIGHTING	1.20	15		1.38		16	0.18	RECEP RM MUSIC/SECURITY	R	1	20
20	1	R	TREADMILL	1.20	17			1.56	18	0.36	BATH ROOM RECEP	R	1	20
20	1	R	TREADMILL	1.20	19	1.38			20	0.18	RECEP AT ELEC PANELS	R	1	20
20	1	R	TREADMILL	1.20	21		1.56		22	0.36	BATH ROOM RECEP	R	1	20
20	1	R	TREADMILL	1.20	23			1.70	24	0.50	DRINKING FOUNTAIN	R	1	20
20	1	R	TREADMILL	1.20	25	1.70			26	0.50	E5X	R	1	20
20	1	R	TREADMILL	1.20	27		1.70		28	0.50	E5X	R	1	20
20	1	R	TREADMILL	1.20	29			1.70	30	0.50	E5X	R	1	20
20	1	R	TREADMILL	1.20	31	1.70			32	0.50	E5X	R	1	20
20	1	R	TREADMILL	1.20	33		1.70		34	0.50	E5X	R	1	20
20	1	R	TREADMILL	1.20	35			1.70	36	0.50	E5X	R	1	20
20	1	R	TREADMILL	1.20	37	2.20			38	1.00	C5X	R	1	20
20	1	R	TREADMILL	1.20	39		1.20		40		SPARE		1	20
20	1	R	A5X	0.80	41			0.80	42		SPARE		1	20
			PHASE TOTAL	11.0	10.2	11.2			KVA					

TOTAL CONNECTED LOAD 32 KVA 90 A
TOTAL DEMAND LOAD 27 KVA 75 A

MECHANICAL EQUIPMENT SCHEDULE

EQUIPMENT NAME	LOCATION / SERVES	VOLTAGE	PHASE	HP	KW	KW / POLE	FLA	MCA	MOCP	BREAKER AMPACITY	PANEL								DISCONNECT (NOTE 1) SIZE	POLES	FUSE SIZE	ENCLOSURE	CONTROL
RTU-1	WORKOUT FLOOR	208	3			5.47	45.6	57.0	60	60	LP-1,3,5	3	#	4	,1#	10	G-	1	°C.	60	3	NF	NEMA 3R	BY DIVISION 15
RTU-2	WORKOUT FLOOR	208	3			5.47	45.6	57.0	60	60	LP-7,9,11	3	#	4	,1#	10	G-	1	°C.	60	3	NF	NEMA 3R	BY DIVISION 15
WH-1	RESTROOMS	208	1		9.0	4.50			60	60	LP-20,22	2	#	4	,1#	10	G-	1	°C.	60	2	NF	NEMA 1	BY DIVISION 15
EF-1	RESTROOMS	120	1	0.33		0.86			20	20	LP-21	2	#	12	,1#	12	G-	1/2	°C.	30	1	NF	NEMA 1	BY DIVISION 15

NOTES:
1. DISCONNECT SWITCH IS NOT REQUIRED IF UNIT IS PROVIDED WITH DISCONNECT OR IF UNIT HAS CORD/PLUG AND RECEPTACLE.

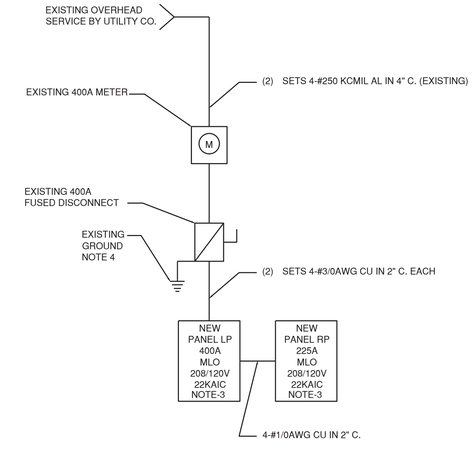

ONE-LINE DIAGRAM NOTES:

1. CONTRACTOR TO VISIT SITE AND FIELD VERIFY ALL EXISTING CONDITIONS IN RELATION TO THE SERVICE PRIOR TO BID AND NOTIFY ENGINEER OF ANY DISCREPANCIES TO WHAT IS SHOWN.
2. SERVICE ENTRANCE WEATHER HEAD, TROUGH, METER, 400A NEMA 1 208V DISCONNECT ARE ALL EXISTING. CURRENTLY THE UTILITY METER IS LOCATED ON THE LOAD SIDE OF THE DISCONNECT. CONTRACTOR TO REWORK SERVICE ENTRANCE SO THAT METER IS AHEAD OF THE SERVICE DISCONNECT. PROVIDE ALL MATERIAL TO IMPLEMENT THIS CHANGE. ENSURE EXISTING DISCONNECT IS SERVICE ENTRANCE RATED AND REPLACE IF REQUIRED.
3. CONTRACTOR TO PROVIDE A NEW 400A, 208v, 3P, 42-POLE PANELBOARD AND A NEW 225A, 208V, 3P 42-POLE SUBPANEL AS SHOWN.
4. CONTRACTOR TO INSPECT AND REPAIR/REPLACE EXISTING GROUNDING SYSTEM IN ORDER TO MEET ALL REQUIREMENTS OF ARTICLE 250 OF THE NEC.

SINGLE LINE DIAGRAM

NO SCALE

COMcheck Software Version 4.0.0

Interior Lighting Compliance Certificate

Section 1: Project Information

Energy Code: **2006 IECC**
Project Title: Work Out Anytime
Project Type: Addition

Construction Site: 1100 Brighton Avenue, Unit 12, Portland, ME 04102
Owner/Agent:
Designer/Contractor:

Section 2: Interior Lighting and Power Calculation

A Area Category	B Floor Area (ft2)	C Allowed Watts / ft2	D Allowed Watts (B x C)
Exercise Center	6818	1	6818
		Total Allowed Watts =	6818

Section 3: Interior Lighting Fixture Schedule

A Fixture ID : Description / Lamp / Wattage Per Lamp / Ballast	B Lamps/ Fixture	C # of Fixtures	D Fixture Watt.	E (C X D)
Exercise Center (6818 sq.ft.)				
Linear Fluorescent 1: 48" T8 32W: Electronic:	4	31	128	3968
Linear Fluorescent 2: 48" T8 32W: Electronic:	2	18	64	1152
Compact Fluorescent 1: Quad 2-pin 26W: Electronic:	1	21	26	546
			Total Proposed Watts =	5666

Section 4: Requirements Checklist

Interior Lighting PASSES: Design 17% better than code.

Lighting Wattage:

1. Total proposed watts must be less than or equal to total allowed watts.

Allowed Watts	Proposed Watts	Complies
6818	5666	YES

Controls, Switching, and Wiring:

2. Independent controls for each space (switch/occupancy sensor).

Exceptions:

- Areas designated as security or emergency areas that must be continuously illuminated.
- Lighting in stairways or corridors that are elements of the means of egress.

3. Master switch at entry to hotel/motel guest room.
4. Individual dwelling units separately metered.
5. Each space required to have a manual control also allows for reducing the connected lighting load by at least 50 percent by either controlling all luminaires, dual switching of alternate rows of luminaires, alternate luminaires, or alternate lamps, switching the middle lamp luminaires independently of other lamps, or switching each luminaire or each lamp.

Exceptions:

- Only one luminaire in space.
- An occupant-sensing device controls the area.
- The area is a corridor, storeroom, restroom, public lobby or sleeping unit.
- Areas that use less than 0.6 Watts/sq.ft.

6. Automatic lighting shutoff control in buildings larger than 5,000 sq.ft.

Exceptions:

- Sleeping units, patient care areas: and spaces where automatic shutoff would endanger safety or security.

7. Photocell/astronomical time switch on exterior lights.

Exceptions:

- Lighting intended for 24 hour use.

8. Tandem wired one-lamp and three-lamp ballasted luminaires (No single-lamp ballasts).

Exceptions:

- Electronic high-frequency ballasts; Luminaires on emergency circuits or with no available pair.

Section 5: Compliance Statement

Compliance Statement: The proposed lighting design represented in this document is consistent with the building plans, specifications and other calculations submitted with this permit application. The proposed lighting system has been designed to meet the 2006 IECC requirements in COMcheck Version 4.0.0 and to comply with the mandatory requ ments Checklist.

Andrew Lundy, PE — Name - Title
Signature
09/04/2015 — Date

WORKOUT ANYTIME

PINE TREE SHOPPING CNTR
1100 BRIGHTON AVE
UNIT 12
PORTLAND, ME 04102

MEP CONTACT:JUSTIN R. HARDY, PE
5014 KINGSBRIDGE PASS
POWDER SPRINGS, GA
Phone: (678) 234-8156

STATE OF MAINE — GUIDO INOA ALVAREZ No.13282 — LICENSED PROFESSIONAL ENGINEER

09-09-15

REV. NO.	DATE	DESCRIPTION
1	2/04/2015	LANDLORD COMMENTS

PROJECT NO:
DRAWN BY:
CHECKED BY:
ISSUE DATE: 08-19-15 RELEASED FOR CONSTRUCTION

ELECTRICAL SCHEDULES

E3.0