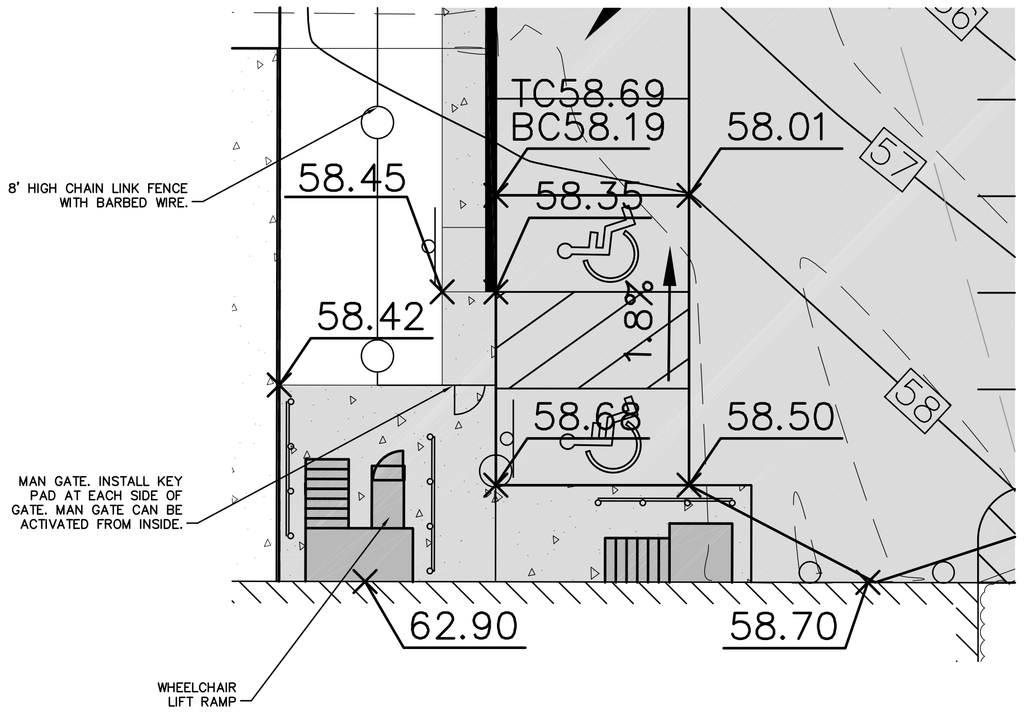

A ADA GRADING DETAIL
SCALE: 1"=10'

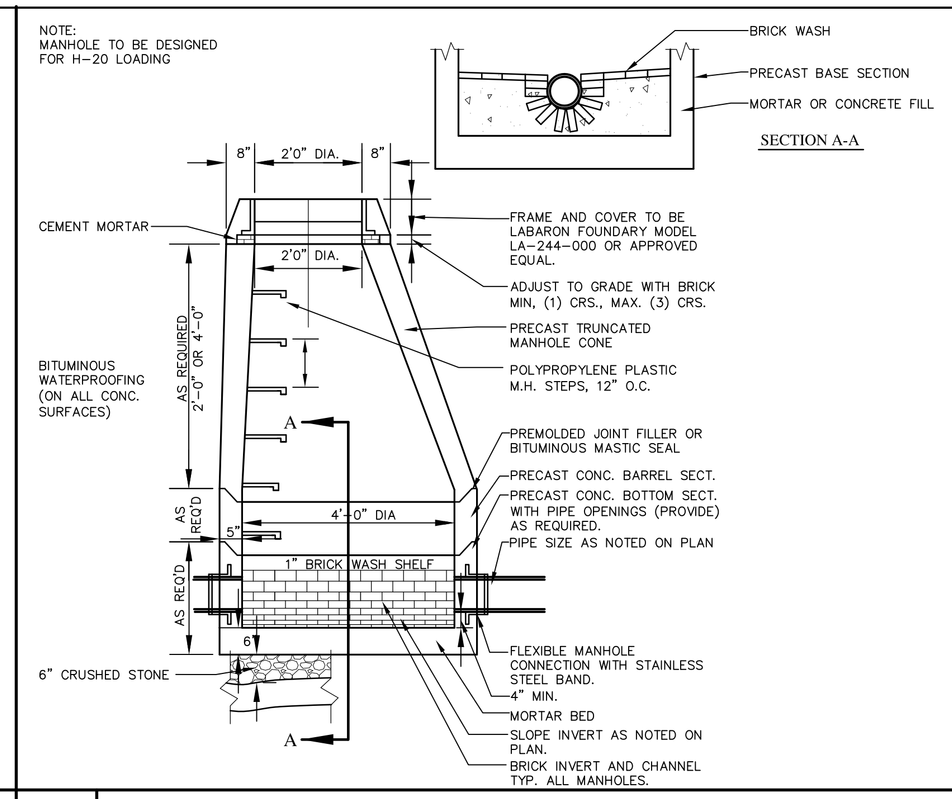

B SEWER MANHOLE DETAIL
N.T.S.

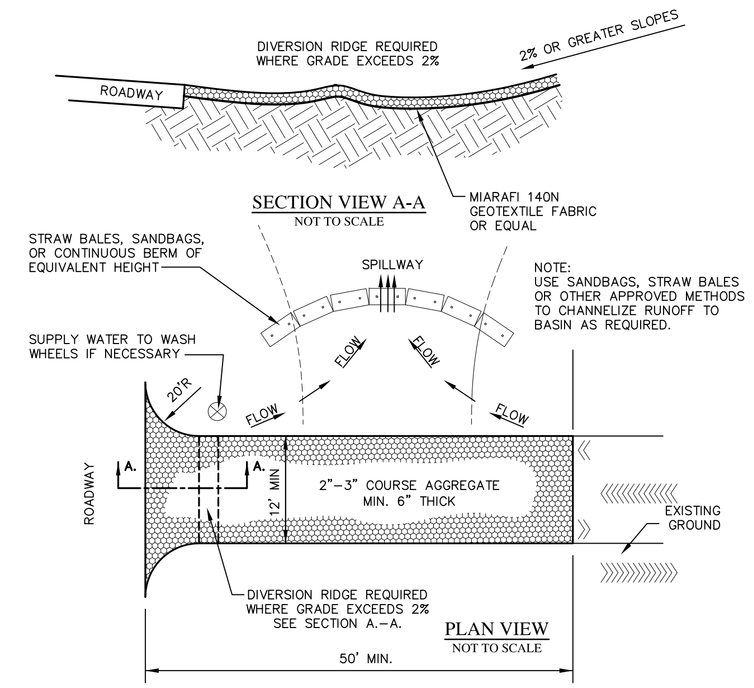

NOTE:
1. THE ENTRANCE SHALL BE MAINTAINED IN A CONDITION THAT WILL PREVENT TRACKING OR FLOWING OF SEDIMENT ONTO PUBLIC RIGHT-OF-WAYS. THIS MAY REQUIRE TOP DRESSING, REPAIR, AND/OR CLEANOUT OF ANY MEASURES USED TO TRAP SEDIMENT.

2. WHEN NECESSARY, WHEELS SHALL BE CLEANED PRIOR TO ENTRANCE ONTO PUBLIC RIGHT-OF-WAYS.

3. WHEN WASHING IS REQUIRED, IT SHALL BE DONE ON AN AREA STABILIZED WITH CRUSHED STONE THAT DRAINS INTO AN APPROVED SEDIMENT TRAP OR BASIN.

C STABALIZED CONSTRUCTION ENTRANCE
N.T.S.

MADRAX

MADRAX DIVISION
TRILARY, INC.
1080 UNIEK DRIVE
WAUNAKEE, WI 53597
P(800) 448-7931, P(608) 849-1080, F(608) 849-1081
WWW.MADRAX.COM, E-MAIL: SALES@MADRAX.COM

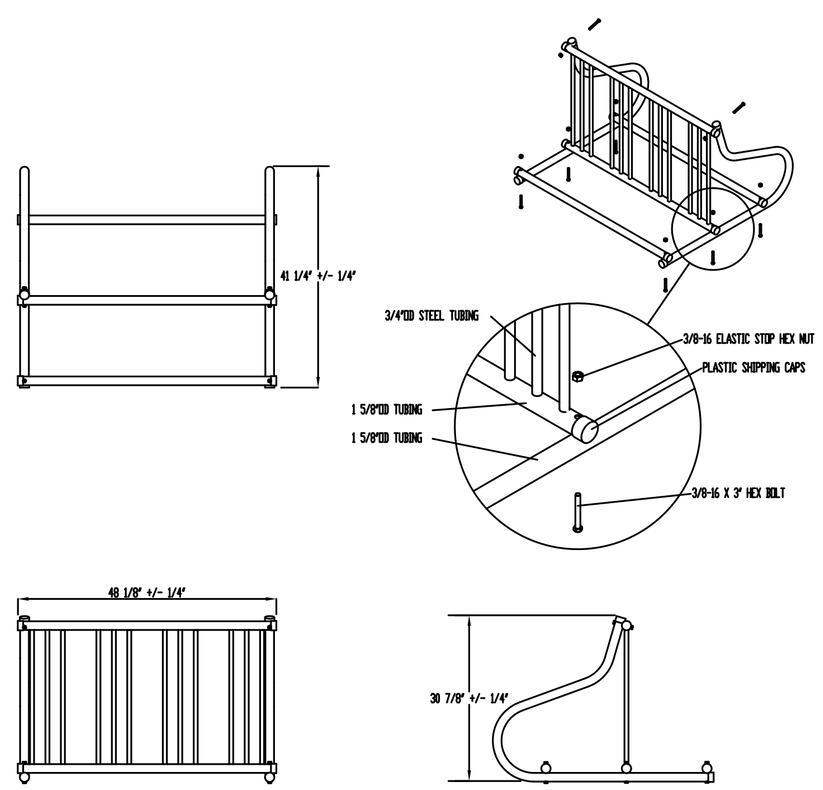

PRODUCT: GR110
DESCRIPTION: GRIDRAC BIKE RACK
8 BIKE (4 PER SIDE), SURFACE MOUNT
DATE: 12-12-02
ENG: TLG

CONFIDENTIAL DRAWING AND INFORMATION IS NOT TO BE COPIED OR DISCLOSED TO OTHERS WITHOUT THE CONSENT OF TRILARY, INC. SPECIFICATIONS ARE SUBJECT TO CHANGE WITHOUT NOTICE.

©2007 TRILARY, INC. ALL PROPRIETARY RIGHTS RESERVED.

NOTES:
1. INSTALL BIKE RACKS ACCORDING TO MANUFACTURER'S SPECIFICATIONS.
2. CONSULTANT TO SELECT COLOR(FINISH), SEE MANUFACTURER'S SPECIFICATIONS.
3. SEE SITE PLAN FOR LOCATION OR CONSULT OWNER.

D BIKE RACK (8 SPACES)
N.T.S.

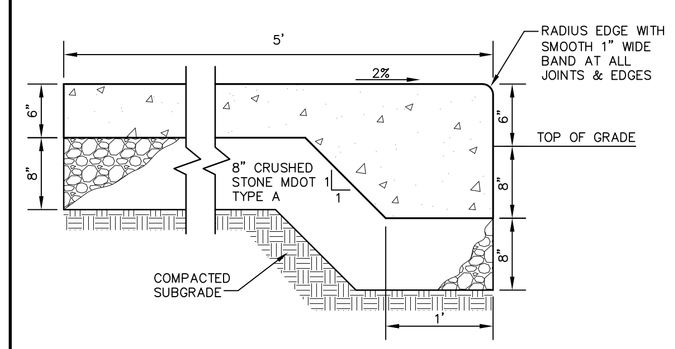

NOTES:
1. CONCRETE SHALL BE CAST-IN-PLACE 5000 PSI W/FIBER REINFORCEMENT.
2. APPLY MEDIUM BROOM FINISH PERPENDICULAR TO DIRECTION OF TRAVEL.
3. PROVIDE 1-1/2" DEEP TOOLED CONTROL JOINT PERPENDICULAR TO WALK AT 5' O.C.
4. PROVIDE EXPANSION JOINT AT 20' INTERVALS.
5. PROVIDE ISOLATION JOINT W/SELF LEVELING SEALER WHERE WALK ABUTS ANY VERTICAL SURFACE.

E INTEGRAL CONCRETE CURB AND SIDEWALK
N.T.S.

F

G

H

I

2.	06/19/14	REVISED PER CITY COMMENTS	JJM
1.	05/19/14	SUBMITTED TO CITY AND MDEP	JJM

TITLE:
SITE DEVELOPMENT DETAILS

PROJECT:
PROPOSED BUILDING EXPANSION
185 RAND ROAD, PORTLAND, ME 04102

OWNER:
OLD DOMINION FREIGHT LINES, INC.
500 OLD DOMINION WAY, THOMASVILLE, NC 27360

STATE OF MAINE
JOSEPH J. MARDEN
12828
LICENSED
PROFESSIONAL ENGINEER

SITELINES, PA
ENGINEERS • PLANNERS • SURVEYORS
LANDSCAPE ARCHITECTS
8 CUMBERLAND STREET, BRUNSWICK, ME 04011
207.725.1200 www.sitelinespa.com

FIELD WK: JJM/MC	SCALE: NTS	SHEET:
DRN BY: RPL	JOB #: 2454	C6
CH'D BY: CYN	MAP/LOT: 254/A007001	
DATE: 02/26/14	FILE: 2454-COVER-DET	