DISPLAY THIS CARD ON PRINCIPAL FRONTAGE OF WORK

CITY OF PORTLAND

BUILDING PERMIT

This is to certify that
SIMPLEXGRINNELL
20 THOMAS DR
WESTBROOK, ME 04092

For installation at
95 HUTCHINS DR
FedEx

Job ID: 2011-11-2819-FAFS

CBL: 240- B-002-001

has permission to install master box fire alarm system
provided that the person or persons, firm or corporation accepting this permit shall comply with all of the provisions of the Statues of Maine and of the Ordinances of the City of Portland regulating the construction, maintenance and use of the buildings and structures, and of the application on file in the department.

Notification of inspection and written permission procured before this building or part thereof is lathed or otherwise closed-in. 48 HOUR NOTICE IS REQUIRED.

A final inspection must be completed by owner before this building or part thereof is occupied. If a certificate of occupancy is required, it must be

58

Fire Prevention Officer

Code Enforcement Officer / Plan Reviewer

THIS CARD MUST BE POSTED ON THE STREET SIDE OF THE PROPERTY
PENALTY FOR REMOVING THIS CARD

BUILDING PERMIT INSPECTION PROCEDURES

Please call 874-8703 or 874-8693 (ONLY)

or email: buildinginspections@portlandmaine.gov

With the issuance of this permit, the owner, builder or their designee is required to provide adequate notice to the city of Portland Inspections Services for the following inspections. Appointments must be requested 48 to 72 hours in advance of the required inspection. The inspection date will need to be confirmed by this office.

- **Please read the conditions of approval that is attached to this permit!! Contact this office if you have any questions.**
- **Permits expire in 6 months. If the project is not started or ceases for 6 months.**
- **If the inspection requirements are not followed as stated below additional fees may be incurred due to the issuance of a "Stop Work Order" and subsequent release to continue.**

Final Fire

The project cannot move to the next phase prior to the required inspection and approval to continue, REGARDLESS OF THE NOTICE OF CIRCUMSTANCES.

IF THE PERMIT REQUIRES A CERTIFICATE OF OCCUPANCY, IT MUST BE PAID FOR AND ISSUED TO THE OWNER OR DESIGNEE BEFORE THE SPACE MAY BE OCCUPIED.

PORTLAND MAINE

Strengthening a Remarkable City, Building a Community for Life • www.portlandmaine.gov

Director of Planning and Urban Development
Penny St. Louis

Job ID: 2011-11-2819-FAFS
install master box fire alarm system

For installation at:
95 HUTCHINS DR
FedEx

CBL: 240- B-002-001

Conditions of Approval:

Fire

The installation shall comply with the following:

City of Portland Chapter 10, Fire Prevention and Protection;

NFPA 1, *Fire Code* (2009 edition), as amended by City Code;

NFPA 101, *Life Safety Code* (2009 edition), as amended by City Code;

City of Portland Fire Department Rules and Regulations;

NFPA 72, *National Fire Alarm and Signaling Code* (2010 edition), as amended by Fire Department Rules and Regulations; and

NFPA 70, *National Electrical Code* (2011 edition) as amended by the State of Maine.

The fire alarm system shall be certified by a master fire alarm company and have a new fire alarm inspection sticker.

A full function annunciator shall be provided at the front door.

In field installation shall be installed per code as conditions dictate.

All smoke detectors and smoke alarms shall be photoelectric.

Records cabinet, FACP, annunciator(s), and pull stations shall be keyed alike.

Central Station monitoring for addressable fire alarm systems shall be by point.

All fire alarm records required by NFPA 72 should be stored in an approved cabinet located at the FACP labeled "FIRE ALARM RECORDS".

Installation of a Fire Alarm system requires a Knox Box to be installed per city ordinance.

System acceptance and commissioning must be coordinated with alarm and suppression system contractors and the Fire Department. Call 874-8703 to schedule.

Fire Alarm system shall be maintained. If system is to be off line over 4 hours a fire watch shall be in place. Dispatch notification required 874-8576.

A master box connection and drill switch is required. AES Zones shall be:

1. Water flow
2. City Disconnect: Water flow
3. Pull stations and detectors

4. City Disconnect: Pull stations and detectors
5. Not assigned
6. Not assigned
7. Not assigned
8. AES tamper switch

Master Box Approval

Applicant: Federal Exress
App Phone #: 207-761-1682
Building Name: FedEx
Building Address: 95 Hutchins Dr.
Occupancy: Industrial
Assembly OL>300, 20 unit apartment building, etc.

Emergency Contact: Tony Farides
Emergency phone #: 207-252-0899
Date of Application: 11/30/11
Billing Address: 95 Hutchins Dr, Portland, Maine 04102
Comments:

Applicant completes red box and submits with Fire Alarm Permit

1 FIRE PREVENTION: ☑ Approved ☐ Denied

___/___/11 (Date) — B J A Wall Jr. (Fire Prevention Officer)

Zone 1: Water flow
Zone 2: City disconnect – Water Flow
Zone 3: Pulls and detectors
Zone 4: City disconnect – Pulls and Detectors
Zone 5: Unassigned
Zone 6: Unassigned
Zone 7: Unassigned
Zone 8: AES Tamper switch

Modify City Box response to alarm sounding in CAD: ☐ YES ☑ NO

2 FIRE ALARM: Box #: 3536

3 ELECTRICAL DIVISION: ☐ Approved ☐ Denied

Box Type: AES Radio Box / _____ (New / Other)

Test Date: ___/___/___ In Service Date: ___/___/___ _____ (Fire Alarm Technician)

AES

Circuit if applicable:

4 FIRE ALARM: Same Running Assignment As Box: ____

Notifications: ☐ All Stations ☐ Run Books ☐ Digitizer ☐ Computer ☐ Cad Box Test

☐ South Portland ☐ _____ (Other) _____ (Dispatcher)

5 BILLING: ☐ Entered _____ (Financial Officer)

GG

2011 11 2819

IM

owner
A rnow Realty
299 Forest Ave
04101

Fire Alarm Permit

If you or the property owner owes real estate or property taxes or user charges on any property within the city, payment arrangements must be made before permits of any kind are accepted.

240 B002
com

Installation address: 95 Hutchins Drive CBL: Elec Rm.

Exact location: (within structure) Electrical Room, Center of Building -Access from warehouse

Type of occupancy(s) (NFPA & ICC):

Building owner: FedEx

System Designer (point of contact): Ken Plourde (Must be)

Designer phone: 207-749-6726 E-mail: kplourde@simplexgrinnell.com

Installing contractor: SimplexGrinnell Certificate of Fitness No: M1019

Contractor phone: 207-842-6440 E-mail: kplourde@simplexgrinnell.com

This is a new application: YES (●) NO ( ) New AES Master Box: YES (●) NO ( )
(Include Master Box approval form)

Amendment to an existing permit: YES ( ) NO ( ) Permit no:

The following documents shall be provided with this application:

- [✓] Floor plans
- [✓] Wiring diagram
- [X] Annunciator details
- [ ] Input/ Output Matrix
- [✓] Equipment data sheets
- [ ] Electrical Permit Pulled (check alarm/com)
- [✓] Scope of Work
- [✓] 11 ½ x 17s
- [✓] pdf copy (may be e-mailed)
- [✓] Designer qualifications
- [✓] Battery/ voltage drop calcs

Master box approval only: YES ( ) NO ( )
(If yes check *New AES Master Box* above)

COST OF WORK: $ 9635.00

PERMIT FEE: $120.00
($10 PER $1,000 + $30 FOR THE FIRST $1,000)

RECEIVED
NOV 30 2011
Dept. of Building Inspections
City of Portland Maine

The designer shall be the responsible party for this application. Download a new copy of this application at www.portlandmaine.gov/fire for every submittal. **Submit all plans in electronic PDF in addition to readable 11 ½ x 17s to the Building Inspections Department, 389 Congress Street, Room 315, Portland, Maine 04101.**

Prior to acceptance of any fire alarm system, a complete commissioning and acceptance test must be coordinated with all fire system contractors and the Fire Department, and proper documentation of such test(s) provided.

All installation(s) must comply with the *City of Portland Technical Standard for Signaling Systems for the Protection of Life and Property*, available at www.portlandmaine.gov/fire .

Applicant signature: Ken Plourde Date: 11/29/11

		Control Unit Annunciation							Notification				
		ACTUATE COMMON ALARM SIGNAL	ACTUATE AUDIBLE ALARM SIGNAL	ACTUATE COMMON SUPERVISORY SIGNAL INDICATOR	ACTUATE AUDIBLE SUPERVISORY SIGNAL	ACTUATE COMMON TROUBLE SIGNAL INDICATOR	ACTUATE AUDIBLE COMMON TROUBLE SIGNAL	ACTUATE DEVICE INDIVIDUAL ALARM INDICATOR	ACTUATE 1ST FLOOR EVACUATION SIGNALS	TRANSMIT FIRE ALARM SIGNAL TO SUPERVISING STATION	TRANSMIT SUPERVISORY SIGNAL TO SUPERVISING STATION	TRANSMIT TROUBLE SIGNAL TO SUPERVISING STATION	
SYSTEM INPUTS		A	B	C	D	E	F	G	H	I	J	K	
1	MANUAL FIRE ALARM BOXES - 1ST FLOOR	X	X					X	X	X			1
2	SMOKE DETECTORS - 1ST FLOOR	X	X					X	X	X			2
3	WATERFLOW - 1ST FLOOR	X	X					X	X	X			3
4	SPRINKLER CONTROL VALVE - 1SR FLOOR			X	X						X		4
5	SPRINKLER LOW AIR			X	X						X		5
6	FIRE ALARM AC POWER FAILURE					X	X					X	6
7	FIRE ALARM SYSTEM LOW BATTERY					X	X					X	7
8	OPEN CIRCUIT					X	X					X	8
9	GROUND FAULT					X	X					X	9
10	NOTIFICATION APPLIANCE CIRCUIT SHORT					X	X					X	10
		A	B	C	D	E	F	G	H	I	J	K	

FEDEX INPUT OUTPUT MATRIX

FEDEX
95 Hutchins Drive
Portland, ME

SCOPE of WORK

This project includes replacing the existing Conventional Fire Alarm Control Panel with a Simplex 4010es Addressable Panel. All initiating devices will report as individual devices. The Sprinkler Devices will be connected to Addressable Modules and monitored by the new FACP.

All existing signals will be replaced and new signals added per the diagram. All signals will be ADA compliant.

An AES Master Box will be installed for a connection to the Portland Fire Department. (This has been tested with Dick Andrews for signal strength).

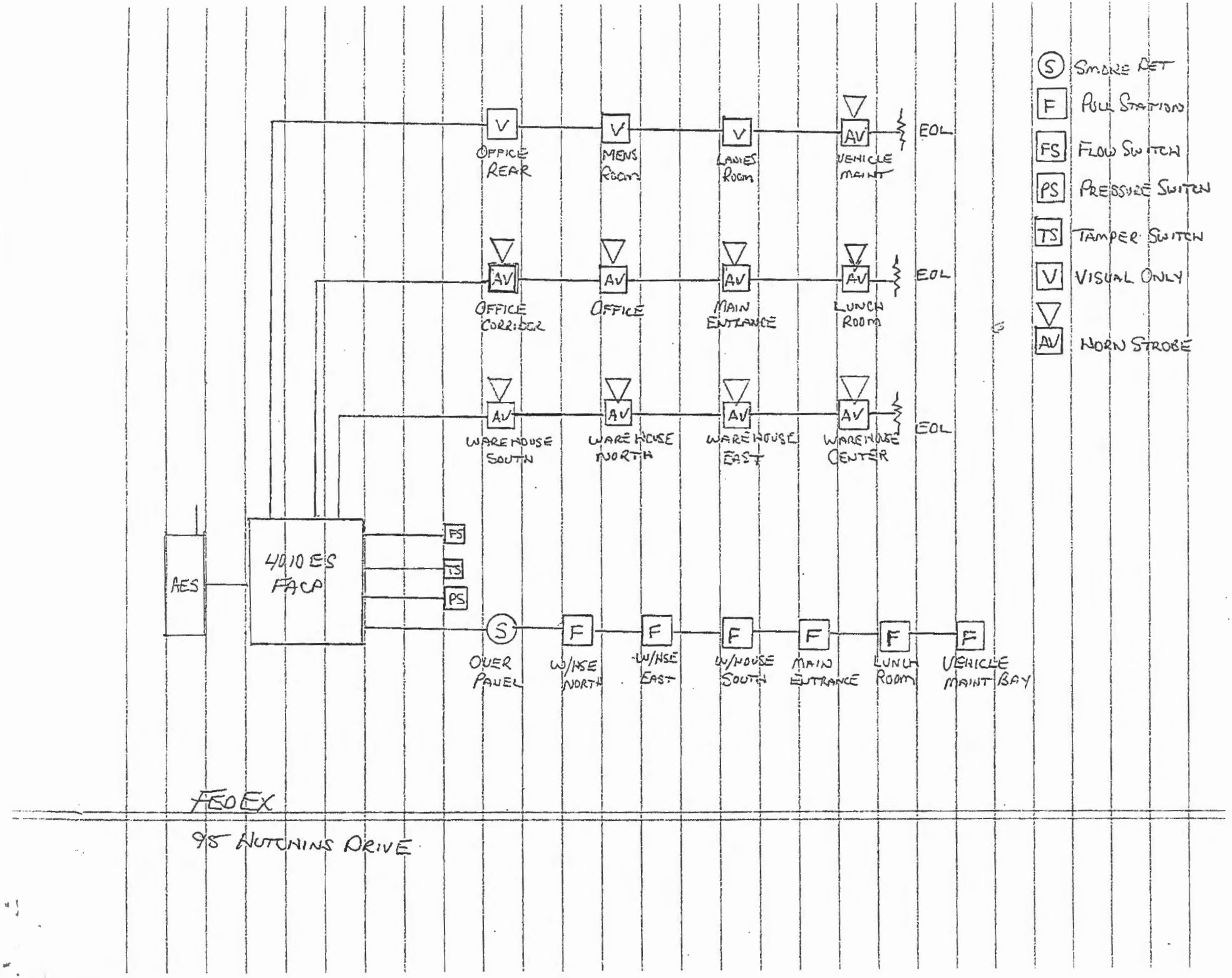
S SMOKE DET
F PULL STATION
FS FLOW SWITCH
PS PRESSURE SWITCH
TS TAMPER SWITCH
V VISUAL ONLY
AV HORN STROBE
V
OFFICE REAR
V
MENS ROOM
V
LADIES ROOM
AV
VEHICLE MAINT
EOL
AV
OFFICE CORRIDOR
AV
OFFICE
AV
MAIN ENTRANCE
AV
LUNCH ROOM
EOL
AV
WAREHOUSE SOUTH
AV
WAREHOUSE NORTH
AV
WAREHOUSE EAST
AV
WAREHOUSE CENTER
EOL
AES
4010 ES FACP
FS
TS
PS
S
OVER PANEL
F
W/HSE NORTH
F
W/HSE EAST
F
W/HOUSE SOUTH
F
MAIN ENTRANCE
F
LUNCH ROOM
F
VEHICLE MAINT BAY
FEDEX
95 HUTCHINS DRIVE

FEDEX
95 HUTCHINS DR

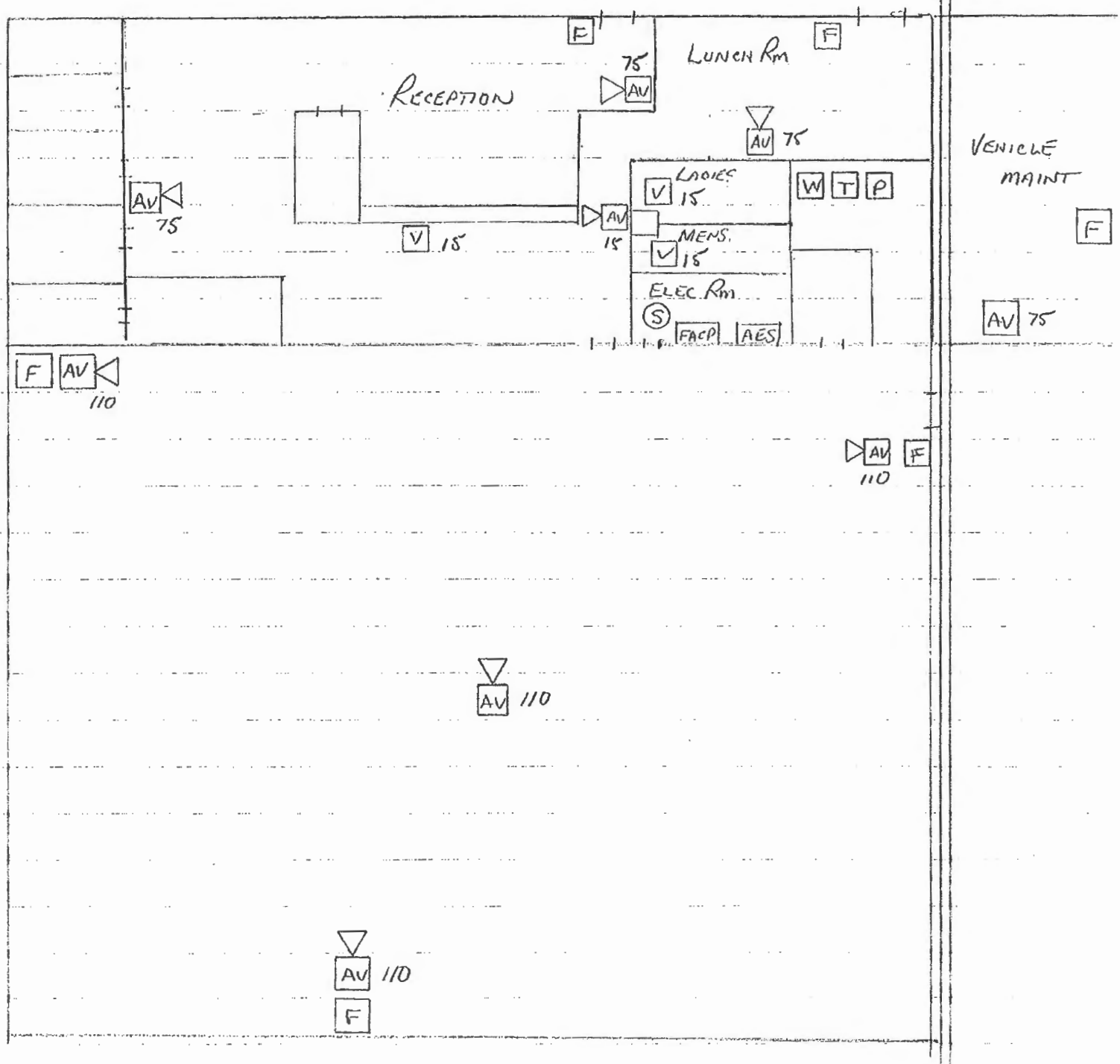

JOB & LOCATION NAME

Module	Qty	Description	Standby Current	Total Standby	Alarm Current	Total Alarm
Panel Equipment						
4010-9101	1	FACP 250PT 4NAC 4A 120V BEIGE	0.195000	0.195000	0.295	0.295000
XXXX-XXXX	0	DESCRIPTION	0.000000	0.000000	0.000	0.000000
XXXX-XXXX	0	DESCRIPTION	0.000000	0.000000	0.000	0.000000
XXXX-XXXX	0	DESCRIPTION	0.000000	0.000000	0.000	0.000000
XXXX-XXXX	0	DESCRIPTION	0.000000	0.000000	0.000	0.000000
XXXX-XXXX	0	DESCRIPTION	0.000000	0.000000	0.000	0.000000
XXXX-XXXX	0	DESCRIPTION	0.000000	0.000000	0.000	0.000000
XXXX-XXXX	0	DESCRIPTION	0.000000	0.000000	0.000	0.000000
XXXX-XXXX	0	DESCRIPTION	0.000000	0.000000	0.000	0.000000
XXXX-XXXX	0	DESCRIPTION	0.000000	0.000000	0.000	0.000000
XXXX-XXXX	0	DESCRIPTION	0.000000	0.000000	0.000	0.000000
XXXX-XXXX	0	DESCRIPTION	0.000000	0.000000	0.000	0.000000
XXXX-XXXX	0	DESCRIPTION	0.000000	0.000000	0.000	0.000000
XXXX-XXXX	0	DESCRIPTION	0.000000	0.000000	0.000	0.000000
XXXX-XXXX	0	DESCRIPTION	0.000000	0.000000	0.000	0.000000
XXXX-XXXX	0	DESCRIPTION	0.000000	0.000000	0.000	0.000000
XXXX-XXXX	0	DESCRIPTION	0.000000	0.000000	0.000	0.000000
XXXX-XXXX	0	DESCRIPTION	0.000000	0.000000	0.000	0.000000
XXXX-XXXX	0	DESCRIPTION	0.000000	0.000000	0.000	0.000000
XXXX-XXXX	0	DESCRIPTION	0.000000	0.000000	0.000	0.000000
XXXX-XXXX	0	DESCRIPTION	0.000000	0.000000	0.000	0.000000
XXXX-XXXX	0	DESCRIPTION	0.000000	0.000000	0.000	0.000000
XXXX-XXXX	0	DESCRIPTION	0.000000	0.000000	0.000	0.000000
XXXX-XXXX	0	DESCRIPTION	0.000000	0.000000	0.000	0.000000
XXXX-XXXX	0	DESCRIPTION	0.000000	0.000000	0.000	0.000000
XXXX-XXXX	0	DESCRIPTION	0.000000	0.000000	0.000	0.000000
XXXX-XXXX	0	DESCRIPTION	0.000000	0.000000	0.000	0.000000
			Total Panel Stby	0.195000	Total Panel Alarm	0.295000
Peripheral Devices						
4098-9792	1	TRUEALARM SENSOR BASE	0.000000	0.000000	0.000	0.000000
4098-9714	1	TRUEALARM PHOTO SMOKE SENSOR	0.000000	0.000000	0.000	0.000000
4090-9001	6	IDNET SUPERVISED IAM	0.000000	0.000000	0.000	0.000000
4099-9001	6	IDNET SINGLE ACTION PULL STATION	0.000000	0.000000	0.000	0.000000
XXXX-XXXX	0	DESCRIPTION	0.000000	0.000000	0.000	0.000000
XXXX-XXXX	0	DESCRIPTION	0.000000	0.000000	0.000	0.000000
XXXX-XXXX	0	DESCRIPTION	0.000000	0.000000	0.000	0.000000
XXXX-XXXX	0	DESCRIPTION	0.000000	0.000000	0.000	0.000000
XXXX-XXXX	0	DESCRIPTION	0.000000	0.000000	0.000	0.000000
XXXX-XXXX	0	DESCRIPTION	0.000000	0.000000	0.000	0.000000
XXXX-XXXX	0	DESCRIPTION	0.000000	0.000000	0.000	0.000000
XXXX-XXXX	0	DESCRIPTION	0.000000	0.000000	0.000	0.000000
XXXX-XXXX	0	DESCRIPTION	0.000000	0.000000	0.000	0.000000
XXXX-XXXX	0	DESCRIPTION	0.000000	0.000000	0.000	0.000000
XXXX-XXXX	0	DESCRIPTION	0.000000	0.000000	0.000	0.000000
XXXX-XXXX	0	DESCRIPTION	0.000000	0.000000	0.000	0.000000
XXXX-XXXX	0	DESCRIPTION	0.000000	0.000000	0.000	0.000000
XXXX-XXXX	0	DESCRIPTION	0.000000	0.000000	0.000	0.000000
XXXX-XXXX	0	DESCRIPTION	0.000000	0.000000	0.000	0.000000
XXXX-XXXX	0	DESCRIPTION	0.000000	0.000000	0.000	0.000000
XXXX-XXXX	0	DESCRIPTION	0.000000	0.000000	0.000	0.000000
XXXX-XXXX	0	DESCRIPTION	0.000000	0.000000	0.000	0.000000
XXXX-XXXX	0	DESCRIPTION	0.000000	0.000000	0.000	0.000000
XXXX-XXXX	0	DESCRIPTION	0.000000	0.000000	0.000	0.000000
XXXX-XXXX	0	DESCRIPTION	0.000000	0.000000	0.000	0.000000
XXXX-XXXX	0	DESCRIPTION	0.000000	0.000000	0.000	0.000000
XXXX-XXXX	0	DESCRIPTION	0.000000	0.000000	0.000	0.000000
XXXX-XXXX	0	DESCRIPTION	0.000000	0.000000	0.000	0.000000
XXXX-XXXX	0	DESCRIPTION	0.000000	0.000000	0.000	0.000000
XXXX-XXXX	0	DESCRIPTION	0.000000	0.000000	0.000	0.000000
XXXX-XXXX	0	DESCRIPTION	0.000000	0.000000	0.000	0.000000
XXXX-XXXX	0	DESCRIPTION	0.000000	0.000000	0.000	0.000000
XXXX-XXXX	0	DESCRIPTION	0.000000	0.000000	0.000	0.000000
XXXX-XXXX	0	DESCRIPTION	0.000000	0.000000	0.000	0.000000
XXXX-XXXX	0	DESCRIPTION	0.000000	0.000000	0.000	0.000000
XXXX-XXXX	0	DESCRIPTION	0.000000	0.000000	0.000	0.000000
XXXX-XXXX	0	DESCRIPTION	0.000000	0.000000	0.000	0.000000
XXXX-XXXX	0	DESCRIPTION	0.000000	0.000000	0.000	0.000000
XXXX-XXXX	0	DESCRIPTION	0.000000	0.000000	0.000	0.000000
XXXX-XXXX	0	DESCRIPTION	0.000000	0.000000	0.000	0.000000
XXXX-XXXX	0	DESCRIPTION	0.000000	0.000000	0.000	0.000000
XXXX-XXXX	0	DESCRIPTION	0.000000	0.000000	0.000	0.000000
			Total Periph Stby	0.000	Total Periph Alarm	1.916
			Total Standby Amps	0.195	Total Alarm Amps	2.211
Mult-Candella Strobes (Select Candella Rating)						
4906-9101	1	V/O M-C NON-ADDRESS, RED, WALL 15cd	0.000000	0.000000	0.053	0.053000
4906-9101	0	V/O M-C NON-ADDRESS, RED, WALL 30cd	0.000000	0.000000	0.064	0.000000
4906-9101	0	V/O M-C NON-ADDRESS, RED, WALL 75cd	0.000000	0.000000	0.185	0.000000
4906-9101	0	V/O M-C NON-ADDRESS, RED, WALL 110cd	0.000000	0.000000	0.224	0.000000
4906-9127	1	A/V M-C NON-ADDRESS, RED, WALL 15cd	0.000000	0.000000	0.067	0.067000
4906-9127	0	A/V M-C NON-ADDRESS, RED, WALL 30cd	0.000000	0.000000	0.103	0.000000
4906-9127	4	A/V M-C NON-ADDRESS, RED, WALL 75cd	0.000000	0.000000	0.196	0.784000
4906-9127	4	A/V M-C NON-ADDRESS, RED, WALL 110cd	0.000000	0.000000	0.253	1.012000
4906-9151	0	S/V M-C NON-ADDRESS, RED, WALL 15cd	0.000000	0.000000	0.053	0.000000
4906-9151	0	S/V M-C NON-ADDRESS, RED, WALL 75cd	0.000000	0.000000	0.165	0.000000
RSSR-24MCC-NW	0	MULTI CD RED STR, 24VDC, WHITE 75cd	0.000000	0.000000	0.030	0.000000
4906-9151	0	S/V M-C NON-ADDRESS, RED, WALL 110cd	0.000000	0.000000	0.224	0.000000
Miscellaneous Outside Purchased Items Requiring System Power						
4906-9103	0	Ceiling Mount VO 15 CD	0.000000	0.000000	0.053000	0.000000
XXXX-XXXX	0	Description	0.000000	0.000000	0.000000	0.000000
XXXX-XXXX	0	Description	0.000000	0.000000	0.000000	0.000000
XXXX-XXXX	0	Description	0.000000	0.000000	0.000000	0.000000
XXXX-XXXX	0	Description	0.000000	0.000000	0.000000	0.000000
XXXX-XXXX	0	Description	0.000000	0.000000	0.000000	0.000000
XXXX-XXXX	0	Description	0.000000	0.000000	0.000000	0.000000
			Total Periph Stby	0.000	Total Periph Alarm	1.916
			Total Standby Amps	0.195	Total Alarm Amps	2.211

* Current Draw Included With Device Addresses Used (See additional current draws)

* 2-wire detector alarm current is included in the alarm current of the initiating Device Circuit.

Battery Calculations			Standby Current		Alarm Current
Control Panel Card Power			0.195		0.295
Power For External Peripheral Devices			0.00000		1.91600
			0.195	<-- Sub Total's -->	2.211
Additional Current Draws					
MAPNET/DNet Device Addresses ordered / used	13	13 0	0.009		0.009
Spare addressable point capacity included for battery calc	0%	0	0.000		0.000
			0.204	<--Grand Total's -->	2.220
Additional Battery Capacity Required	0%		0.000		0.000
Standby Time =	24	Hrs	4.896	Standby Ah	
Alarm Time =	5	Mins	0.188	Alarm Ah	
		Standby + Alarm =	5.083		
Minimum Battery Required per NFPA 72 2010 2081-9372 6.2			6.100	20% Safety Margin	

SimplexGrinnell
BE SAFE.

20 Thomas Dr
WESTBROOK, ME 04092-3824
(207) 842 6440
FAX: (207) 842 6439
www.simplexgrinnell.com

SimplexGrinnell Material List (THIS IS NOT A PRICE QUOTATION)

TO:
FedEx
Hutchins Drive
Portland, ME 04092
Attn: Tony Farides

(207) 761-1682 EXT(____) Fax:

Project: 4010es
Customer Reference:
SimplexGrinnell Reference: 147420284
Proposal #: P26857-001256
Date: 11/21/2011

QUANTITY	MODEL NUMBER	DESCRIPTION
	4010es	
	FedEx 4010es	
1	4098-9714	PHOTO SENSOR
1	4098-9792	SENSOR BASE
6	4090-9001	SUPERVISED IAM
6	4099-9001	MANUAL STATION - SINGLE ACTION
1	4906-9101	STROBE MC RED
9	4906-9127	HORN/STROBE MC RED
4	4906-9103	STROBE MC WHITE
2	2081-9274	BATTERY 10AH
1	SSU00672	CAB DOC STORAGE 12X13X2D RED
	MASTER BOX	
1	7788-F	8ZONES W/2.5DB RED
1	1640	UL TRNSFR FOR 7750-F SUBSCRIBE
1	2081-9272	BATTERY 6.2 AH
	WIRING AND INSTALLATION	
	4010es	
1	4010-9402	4010ES FACP 120V PLATINUM
1	4010-9908	4 POINT AUX RELAY MODULE

Comments

This quote includes the following:

- Replacing the existing Fire Alarm Panel with a new Addressable Panel.
- Replacing all Initiating Devices with Addressable.
- Installing a Smoke Detector over the Panel
- Installing an AES Master Box adjacent to the panel.
- Replacing all existing Signals with Horn Strobes and adding Signals in the Bathrooms, Lunchroom and Maine Entrance.
- Disconnecting the Sprinkler from the Security Panel and connecting it to the Fire Alarm Panel.
- Installing a Records Box next to the Fire Alarm Panel.

This quote includes Wiring, Installation, Programming and Testing of all Devices.

Simplex

*UL, ULC, CSFM Listed; FM Approved**

4010ES Fire Control Panels

Addressable Fire Detection and Control
Basic Panel Modules and Accessories

Features

Basic System Includes:

- Capacity for up to 248 addressable devices, up to 127 VESDA SLI points, up to 2000 points of Annunciation and up to 20 internal and external card addresses
- Color-coded operator interface with membrane keypad includes 2 x 40 Super-twist LCD display, 3 programmable control keys and 6 programmable LEDs
- CPU assembly includes dedicated compact flash memory for on-site system information storage and convenient Ethernet service port access
- 8 Amp power supply with up to 2 Amps of Auxiliary power and battery charger capacity for up to 110 Ah batteries (UL) or up to 50 Ah batteries (ULC) (33 Ah max in control panel cabinet)
- 4 on-board Class A or B 3 Amp NACs and one programmable auxiliary relay output rated for 2 Amps @ 32 VDC
- Class A or B Two-loop Isolated IDNet™ Communications (IDNet+) supports up to 248 addressable and analog sensing devices on non-twisted, non-shielded wiring
- Remote annunciator module support via RUI (remote unit interface) communications port, supports either Class B (Style 4) or X (Style 7) Pathway operation
- 48 LED panel mount annunciation provides 40 Red and 8 Yellow pluggable LEDs (select models, meets ULC requirements), optional LED kits are available for custom LED configurations

Optional MSS and Door Mount Modules Include:

- City Connect (with or without disconnect switches), Alarm Relay Module, TrueInsight Remote Gateway

Optional Block Space Modules Include:

- Fire Alarm Network Interface Card for 4120/4100 Peer-to-Peer network communications, supports either Class B or X (Style 7) Pathway operation
- Ethernet connectivity options include Building Network Interface Module (BNIC) and SafeLINC Internet Interface
- Dual RS-232 Module (for printer, PC annunciator or third party interface)
- VESDA® Air Aspiration High Level Interface
- Serial DACT
- 8 Zone IDC Modules Class A or B
- 4 Point Auxiliary Relay Module

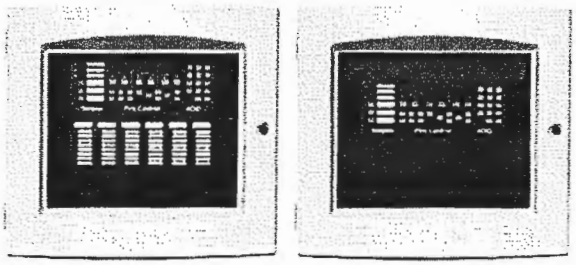

4010ES Fire Alarm Control Panel
with or without LED Annunciation

Compatible with Simplex® remotely located:

- 4003EC Small Voice Panels
- 4009 IDNet NAC Extenders
- 4009 TrueAlert Addressable Controllers and TrueAlert Power Supplies (TPS)
- 4081 110Ah Battery Chargers
- 4100-7400 Series Graphic Annunciators
- 4190 PC Annunciator
- 4190 Fiber Modems and Physical Bridges
- 4606-9102 Remote LCD Annunciator and 4100-9400 Series Remote InfoAlarm Command Centers
- IP communicator compatibility

4010ES Agency Listing:

- UL Std. 864, Fire Detection and Control (UOJZ), and Smoke Control Service (UUKL), and Releasing Service (SYZV)
- UL Std. 2017, Process Management Equipment (QVAX)
- UL Std. 1076, Proprietary Alarm Units-Burglar (APOU)
- UL Std. 1730, Smoke Detector Monitor (UULH)
- ULC Std. S527-99, Fire Detection and Control (UOJZC)
- ULC Std. S559-04, Supervising Station (DAYRC)

* See pages 5 and 6 for additional listing information. This product has been approved by the California State Fire Marshal (CSFM) pursuant to Section 13144.1 of the California Health and Safety Code. See CSFM Listing 7165-0026:0369 for allowable values and/or conditions concerning material presented in this document. It is subject to re-examination, revision, and possible cancellation. Additional listings may be applicable; contact your local Simplex product supplier for the latest status. Listings and approvals under Simplex Time Recorder Co. are the property of SimplexGrinnell LP, Westminster.

Introduction

4010ES Series Fire Detection and Control Panels provide leading edge installation, operator, and service features for customer applications in the mid-range addressable fire alarm systems market. An on-board Ethernet port provides fast external system communications to expedite installation and service activity. Dedicated compact flash memory archiving provides secure on-site system information storage of electronic job configuration files to meet NFPA 72® (*National Fire Alarm and Signaling Code*®) requirements.

Modular design. A variety of functional modules are available to meet specific system requirements. Selections allow panels to be configured for either Stand-Alone or Networked fire control operation.

Panel Hardware

The Master Controller and Main System Supply are mounted in the upper section of the 4100ES cabinet.

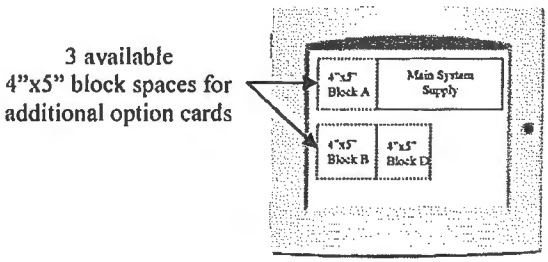

Panel Hardware (continued)

4010ES Block Space Option Cards mount to the left of the 4010ES Main System Supply. There are 3 available 4" x 5" blocks for mounting 4010ES hardware options.

Other 4010ES Options: The 4010ES City Connect module or the optional Alarm Relay module mount directly to the Main System Supply. These options are mutually exclusive.

Network Media modules mount directly to the 4010ES Network Interface Card.

The TrueInsight Remote Gateway mounts on the back side of the 4010ES User Interface Panel.

The Battery Compartment located in the bottom of the 4010ES cabinet accepts two batteries, up to 33 Ah, without interfering with expansion module space.

The illustrations below identify mounting locations optional 4010ES modules.

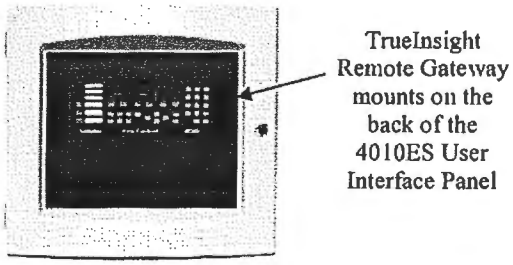

Mechanical Description

- Mounting box provides convenient stud markers for drywall thickness and nail-hole knockouts for quicker mounting
- Smooth box surfaces are provided for locally cutting conduit entrance holes exactly where required
- The hinged User Interface panel easily opens for internal access
- Modules are power-limited (except as noted, such as relay modules)
- Doors include tempered glass inserts, boxes and doors are available in platinum or red
- Box and door/retainer assemblies are included with Basic Panel assemblies

Software Feature Summary

- TrueAlarm individual analog sensing with front panel information and selection access
- "Dirty" TrueAlarm sensor maintenance alerts, service and status reports including "almost dirty"
- TrueAlarm magnet test indication appears as distinct "test abnormal" message on display when in test mode
- TrueAlarm sensor peak value performance report
- ***"Install Mode"*** allows grouping of multiple troubles for uninstalled modules and devices into a single trouble condition (typical with future phased expansion); with future equipment and devices grouped into a single trouble, operators can more clearly identify events from the commissioned and occupied areas
- Module level ground fault searching assists installation and service by locating and isolating modules with grounded wiring
- ***"Recurring Trouble Filtering"*** allows the panel to recognize, process, and log recurring intermittent troubles (such as external wiring ground faults), but only sends a single outbound system trouble to avoid nuisance communications
- WALKTEST™ silent or audible system test performs an automatic self-resetting test cycle

Operator Interface Features

- Convenient and extensive operator information is provided using a logical, menu-driven display
- Multiple automatic and manual diagnostics for maintenance reduction
- Convenient PC programmer label editing
- Password access control
- Alarm and Trouble History Logs (up to 2000 total events) are available for viewing from the LCD, or capable of being printed to a connected printer, or downloaded to a service computer

Convenient Status Information. With the locking door closed, the glass window allows viewing of the display, status LEDs, and available operator switches. Features include a two-line by 40-character, wide viewing angle (super-twist) LCD with status LEDs and switches as shown in the illustration below.

LED indicators describe the general category of activity being displayed with the LCD providing more detail. For the authorized user, unlocking the door provides access to the control switches and allows further inquiry by scrolling the display for additional detail.

The following illustration identifies the primary functions of the operator interface.

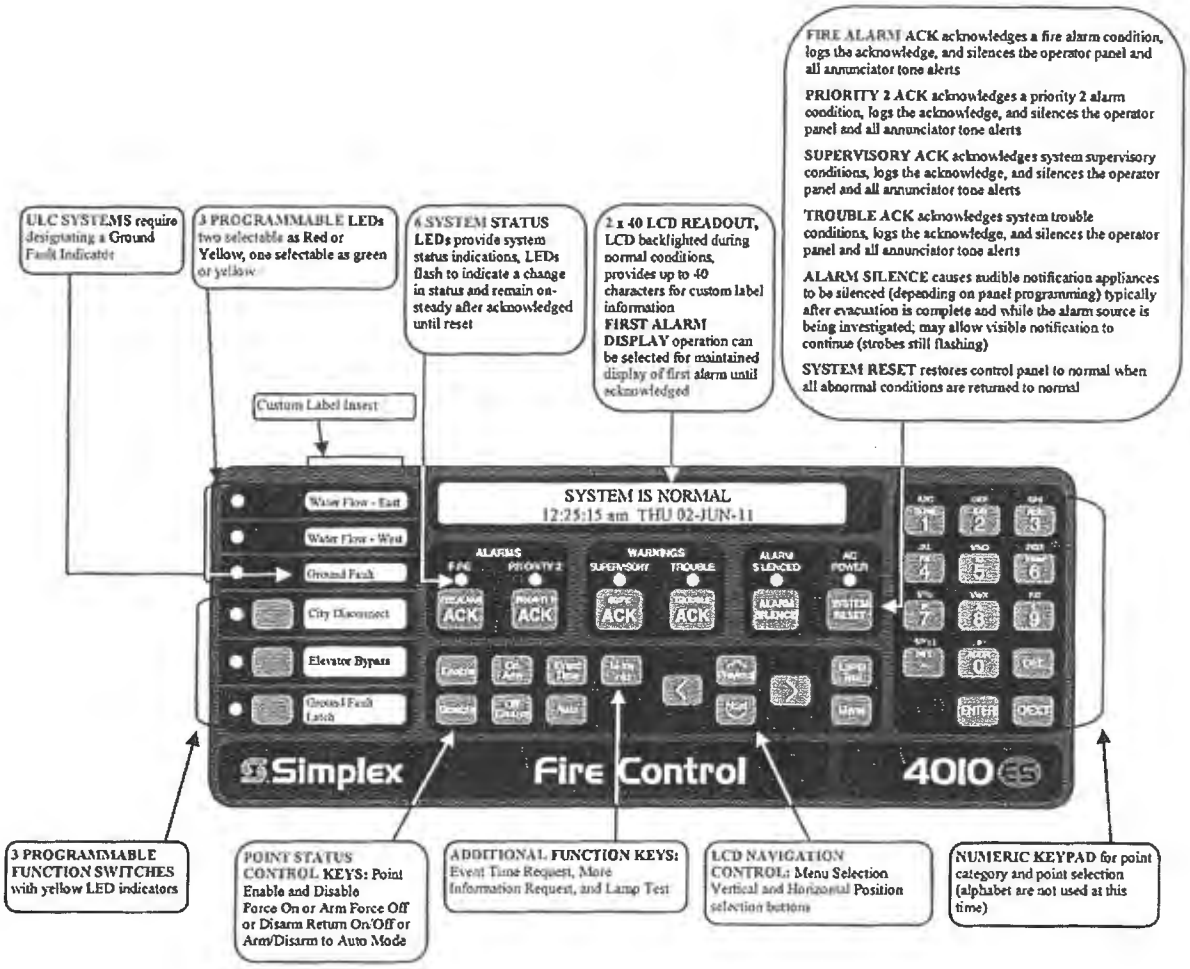

Compatible Peripheral Devices

The 4010ES is compatible with an extensive list of remote peripheral devices including printers, PC Annunciators and both conventional and addressable devices including TrueAlarm analog sensors.

Addressable Device Control

Overview. The 4010ES provides standard addressable device communications for IDNet compatible devices. Using a two wire communications circuit, individual devices such as manual fire alarm stations, TrueAlarm sensors, conventional IDC zones, and sprinkler waterflow switches can be interfaced to the addressable controller to communicate their identity and status.

Addressability allows the location and condition of the connected device to be displayed on the operator interface LCD and on remote system annunciators. Additionally, control circuits (fans, dampers, etc.) may be individually controlled and monitored with addressable devices.

Addressable Operation. Each addressable device on the communication channel is continuously interrogated for status condition such as: normal, off-normal, alarm, supervisory, or trouble. Both Class B and Class A pathway operation are available. Sophisticated poll and response communication techniques ensure supervision integrity and allow for "T-tapping" of the circuit for Class B operation. Devices with LEDs pulse the LED to indicate receipt of a communications poll and can be turned on steady from the panel.

IDNet+ Channel Capacity. The Main System Supply provides an IDNet+ signaling line circuit (SLC) that supports up to 248 addressable monitor and control devices intermixed on the same pair of wires.

IDNet+ Communications wiring specifications. IDNet+ circuits may be run on NEC 760 untwisted pair, twisted pair, or shielded twisted pair conductors.

IDNet+ Wiring Specifications

Size		18 AWG (0.82 mm²)
Type		NEC 760 Wire (untwisted, twisted, or shielded twisted pair)
Farthest Distance from Control Panel per Device load	126-248	Up to 2500 feet (762 m)
	up to 125	Up to 4000 ft (1219 m)
Total Wire Length Allowed Class A or Class B, including "T-taps" for Class B wiring (total for both isolated circuits combined)		Up to 12,500 ft (3.8 km) Note: The sum of line-to-line capacitance plus the capacitance of either line-to-shield (if shield is present) = 0.6 µF maximum (total for both isolated circuits combined)

* Other circuits may require shielded wiring. Review your system with your local Simplex product supplier.

TrueAlarm System Operation

Addressable device communications include operation of TrueAlarm smoke and temperature sensors. Smoke sensors transmit an output value based on their smoke chamber condition and the CPU maintains a current value, peak value, and an average value for each sensor. Status is determined by comparing the current sensor value to its average value. Tracking this average value as a continuously shifting reference point filters out environmental factors that cause shifts in sensitivity.

Programmable sensitivity of each sensor can be selected at the control panel for different levels of smoke obscuration (shown directly in percent) or for specific heat detection levels. To evaluate whether the sensitivity should be revised, the peak value is stored in memory and can be easily read and compared to the alarm threshold directly in percent.

CO sensor bases combine an electrolytic CO sensing module with a TrueAlarm analog sensor to provide a single multiple sensing assembly using one system address. The CO sensor can be enabled/disabled, used in LED/Switch modes and custom control, and can be made public for communication across a fire alarm Network. (refer to data sheet S4098-0041 for details)

TrueAlarm heat sensors can be selected for fixed temperature detection, with or without rate-of-rise detection. Utility temperature sensing is also available, typically to provide freeze warnings or alert to HVAC system problems. Readings can be selected as either Fahrenheit or Celsius.

TrueSense® Early Fire Detection. Multi-sensor 4098-9754 provides photoelectric and heat sensor data using a single 4010ES IDNet address. The panel evaluates smoke activity, heat activity, ***and their combination***, to provide TrueSense early detection. For more details on this operation, refer to data sheet S4098-0024.

Diagnostics and Default Device Type

Sensor Status. TrueAlarm operation allows the control panel to automatically indicate when a sensor is almost dirty, dirty, and excessively dirty. The NFPA 72 requirement for a test of the sensitivity range of the sensors is fulfilled by the ability of TrueAlarm operation to maintain the sensitivity level of each sensor. CO Sensors track their 5 year active life status providing indicators to assist with service planning. Indicators occur at: 1 year, 6 months, and when end of life is reached.

Modular TrueAlarm sensors use the same base and different sensor types (smoke or heat sensor) and can be easily interchanged to meet specific location requirements. This allows intentional sensor substitution during building construction when conditions are temporarily dusty. Instead of covering smoke sensors (causing them to be disabled), heat sensors may be installed without reprogramming the control panel. The control panel will indicate an incorrect sensor type, but the heat sensor will operate at a default sensitivity to provide heat detection for building protection at that location.

Master Controller (CPU)

- The 4010ES Master Controller includes dedicated 2GB compact flash Mass Storage memory for on-site system information storage and convenient Ethernet service port access
- Convenient front panel accessed Ethernet port for quick and easy *download* of site-specific programming
- *AND*, firmware enhancements are made via software downloads to the on-board flash memory
- Every downloaded job is automatically stored to Compact flash without overwriting earlier versions providing a means for recovering previous configurations
- Downtime is reduced because the system stays running during download
- Modifications can be *uploaded* as well as downloaded for greater service flexibility

Master Controller (CPU) continued

- Mass Storage allows job specific files to be store in the control panel such as test and inspection reports, record drawings, specifications, and more...
- Ethernet connectivity options include Building Network Interface Module (BNIC) and SafeLINC Internet Interface
- RUI (remote unit interface) communications port supports either Class B or X Pathway operation for remote annunciation equipment and for 4009 TrueAlert Controllers and TrueAlert Power Supplies

Main System Supply

- The Main System Supply provides the power source and the Input/Output connections for the basic 4010ES panel. The main features are listed in the Basic Panel description below.

Basic Panel Description

All 4010ES panels include an Operator Interface, Master Controller with 2GB Compact Flash, Class A or B Two-loop Isolated IDNet™ Communications (IDNet+) supports up to 248 addressable and analog sensing devices, 8 Amp power supply with up to 2 Amps of auxiliary power, 110 Ah (UL) / 50 Ah (ULC) battery charger (33 Ah max control panel cabinet), 4 Class A or B NACs rated @ 3 Amps each, 1 programmable auxiliary relay rated for 2 Amps @ 32 VDC, 1 RUI Class B or X communications port for remote annunciation devices, cabinet and door. Supports up to 20 internal and external card addresses. Other standard options may be provided depending on model (see basic panel model selection below for additional details on specific models).

Basic Panel Model Selection

Note: Supervisory and Alarm current specifications are for determining battery standby requirements. Current specifications consider no load on addressable channels (see addressable device load specifications for device load battery standby), RUI channel active, and 24 of 48 LEDs active (for 48 LED models)

Model	Features	Panel Color	Language and AC Voltage	Listing	Available Option Blocks	Supv.	Alarm
4010-9401	Basic panel with 2x40 LCD Operator Interface and (1) Two-loop Isolated IDNet+ Channel Class A or B with support for up to 248 addressable analog devices	Red	English 120 V	UL, FM	3 4"x5" blocks	316 mA	390 mA
4010-9402		Platinum					
4010-9403	Same as above with 48 LED annunciation	Red	English 120 V	UL, ULC, FM		336 mA	455 mA
4010-9404		Platinum					
4010-9405		Red	French 120 V	ULC, FM			
4010-9406		Platinum					

Addressable Device Load Specifications for Battery Standby

Addressable Channel	Device Load	Supv.	Alarm
Main System Supply IDNet+	With 248 Devices Add	199 mA	288 mA
	With 125 Devices Add	100 mA	165 mA
	With 50 Devices Add	40 mA	90 mA

Block Space Option Card Selection

Note: Supervisory and Alarm current specifications consider no load on addressable channels (see addressable device load specifications for device load battery standby)

Model	Features	Option Block Usage	Supv.	Alarm
4010-9901	VESDA HLI	1 Block	60 mA	60 mA
4010-9902	Modular Network Interface Card (requires two media modules below)	2 Vertical Blocks	30 mA	30 mA
4010-9818	- Network Media Card Wired	N/A (mounts to 4010-9902)	55 mA	55 mA
4010-9819	- Network Media Card Fiber Optic		25 mA	25 mA
4010-9908	4 Point Aux Relay Module	1 Block	15 mA	60 mA
4010-9912	Serial DACT	1 Block (must mount in block D under main system supply)	30 mA	40 mA
4010-9913*	SafeLINC	2 Vertical Blocks	115 mA	115 mA
4010-9914	Building Network Interface Card	2 Vertical Blocks	236 mA	236 mA
4010-9918	Dual RS232 Module	1 Block	60 mA	60 mA
4010-9920	8 Zone Initiating Device Circuit - Class B	2 Vertical Blocks (must mount top bay, left most blocks A & B)	75 mA	195 mA
4010-9921	8 Zone Initiating Device Circuit - Class A			

* UL/ULC Listed only

Additional Panel Option Selection (block space not used)

Model	Features	Mounting Requirements	Supv.	Alarm
4010-9909	City Connect Module w/ disconnect switches	Mounts on MSS, Mutually exclusive with 4010-9910 and 4010-9911	20 mA	36 mA
4010-9910	City Connect Module	Mounts on MSS, Mutually exclusive with 4010-9909 and 4010-9911	20 mA	36 mA
4010-9911	Alarm Relay Module	Mounts on MSS, Mutually exclusive with 4010-9909 and 4010-9910	15 mA	37 mA
N/A*	TrueInsight Remote Gateway	N/A, Mounts on Front Door	62 mA	62 mA

* Contact your local SimplexGrinnell office for more details

General Specifications

AC Input Specifications	
120 VAC Fire Alarm Control Panels	4 A Maximum, 120 VAC @ 60 Hz nominal

Cabinet Specifications

Cabinet	Height	Width	Depth	Depth with Door
1 Bay Box	22 in. (559 mm)	24 in. (610 mm)	6-15/16 in. (176 mm)	11-11/16 in. (297 mm)

One-Bay Back Box and Door

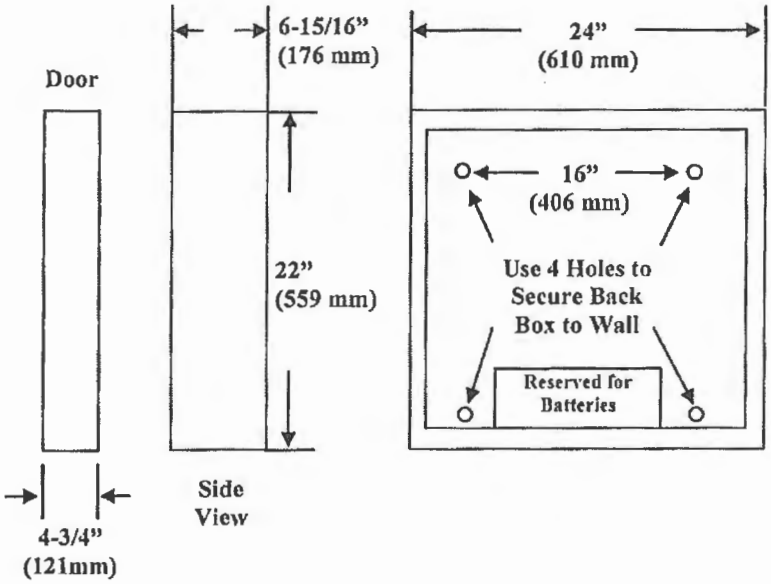

Miscellaneous Accessories

PID	Description
4100-9843	8 Yellow LED Kit
4100-9844	8 Green LED Kit
4100-9845	8 Red LED Kit
4100-9855	8 Blue LED Kit

End user Programming Tools

PID	Description
4100-8802	End User Programming Unit Software
4100-0292	Custom Label Editing (USB Dongle)
4100-0295	Port Vectoring Setup and Control (USB Dongle)
4100-0296	User Group / Passcode Editing (USB Dongle)
4100-0298	WalkTest Configuration Setup and Control (USB Dongle)

4010ES Factory Programming

PID	Description
4010-8810	4010ES Factory Programming
4010-0831	Custom Label and Panel Programming

4010ES Card Address Allocation

The 4010ES has a maximum Internal and External Card Address Limit of 20 Card Addresses. Use the Table below to calculate 4010ES card address allocation.

INSTRUCTIONS: Below is a list of 4010ES equipment and the quantity of card addresses they consume

1) For the applicable control panel, write in the Card Address Consumption value in the Card Address Allocation column (note: only select 1 control panel)

2) For the option cards to be installed on the 4010ES, write in the Card Address Consumption value in the Card Address Allocation column

3) Total the Card Address Allocation column (total must not exceed 20)

PID	Description	Card Addresses Consumption	Card Address Allocation	Notes
	Control Panels (Select One)			
4010-9401, -9402, -9501, or -9502	2x40 Display, Single IDNet Channel, Single Bay Box	2		
4010-9403, -9404, -9405, or -9406	2x40 Display, Single IDNet Channel, 48 Pluggable LED Module	3		4010-9405 & -9406 Canada only
	Panel Option Cards (Select As Required)			
4010-9901	Flat Vesda HLI	1		
4010-9902	Flat Network Card	1		
4010-9908	4 Point Flat Aux Relay Module	1		
4010-9912	Serial DACT	1		
4010-9913	SafeLinc	1		
4010-9914	Building Network Interface Card	1		
4010-9918	Dual RS232 Module	1		
4010-9920	8 Zone Initiating Device Circuit - Class B	1		
4010-9921	8 Zone Initiating Device Circuit - Class A	1		
	Remote Power / Notification (Select As Required)			
4009-9401	4009T TrueAlert Controller 120V	1		
4009-9402CA	4009T TrueAlert Controller 120V w/ Low Battery Cutout	1		Canada Only
4009-9813	Transponder Interface Card	1		
4100-5120	120V Domestic TrueAlert Power Supply	1		
4100-5121	120V Canadian TrueAlert Power Supply	1		Canada Only
	Remote Annunciation (Select As Required)			
4100-9401	Remote Unit Interface Panel w/FUI – Red – Domestic & Canadian English	2		
4100-9403	Remote Unit Interface Panel w/FUI – Platinum – Domestic & Canadian English	2		
4100-9421	Remote Unit Interface Panel w/FUI – Red – Canadian French	2		
4100-9423	Remote Unit Interface Panel w/FUI – Platinum – Canadian French	2		Canada Only
4100-9441	Remote Unit Interface Panel w/FUI – Red – International	2		
4100-9443	Remote Unit Interface Panel w/FUI – Platinum – International	2		
4606-9102	4010ES RUI LCD Annunciator (English)	1		
4606-9102BA	4010ES RUI LCD Annunciator (English)	1		
4606-9102CF	4010ES RUI LCD Annunciator (French)	1		Canada Only
4100-7401	24 Point I/O Graphic Module (requires mounting cabinet)	1		
4100-7402	64 Switch and 64 LED Driver Module with 32 on-board LED drivers (requires mounting cabinet)	1		
	Total Card Addresses - Not to Exceed 20	TOTAL		

Additional Data Sheet References for 4010ES Compatible Equipment

4010ES Releasing Panels and Accessories, 4606 LCD Annun, Remote InfoAlarm Displays, Remote Graphic Annunciators, 110Ah Batt Chargers and Cabinets, BNIC, SafeLINC, SDACT, IDNet+, NIC, Fiber Modem Expansion Cabinets, 4009 IDNet, 4009T and TPS, Printer, PC Annunciator, IDNet Sensors and Devices

Agent Release Applications	S4010-0005			4009 TrueAlert Controller & PS	S4009-0003
Building Network Interface	S4100-0061	Addr. Device Compatibility	S4090-0011	4009 IDNet NAC Extender	S4009-0002
SafeLINC Internet Interface	S4100-0028	Remote LCD Annunciator	S4606-0002	4003EC Voice Control Panel	S4003-0002
		Graphic I/O Modules	S4100-0005	Remote Battery Charger	S4081-0002
VESDA HLI	S4100-0026	Remote InfoAlarm Cmd Ctr	S4010-0008	Remote Printer	S4190-0011
SDACT	S2080-0009	Network Communications	S4100-0056	PC Annunciator	S4190-0013
Fire Alarm Network Overview	S4100-0055			Multi-Signal Fiber Optics	S4100-0049

Simplex

*Listings**

Fire Alarm Control Panel Accessories

System Batteries, Sealed Lead-Acid; with Applications Reference for Battery Cabinets, and Battery Cabinets with Charger

Features

Rechargeable, sealed lead-acid batteries:

- Lead-calcium grid structure with immobilized electrolyte in absorbent separator
- Low maintenance with no need to add water
- Low self-discharge characteristics
- One-piece, high impact polystyrene cell cover with high reliability dual seal construction
- UL 924 recognized pressure relief valves

Available in a variety of capacities:

- Batteries for internal mounting range from 6.2 Ah up to 50 Ah, depending on control panel cabinet size
- Larger batteries, up to 110 Ah, mount in external battery cabinets that are available with internal chargers
- Includes battery chargers with communications compatibility for use with 4010 Series fire alarm control panels and with 4100U Series fire alarm control panels

Description

Simplex® rechargeable sealed-lead acid batteries provide reliable and repeatable discharge and recharge characteristics for use in fire alarm and other systems applications. They are designed with immobilized electrolyte in an absorbent separator, allowing them to provide rated capacity on the first cycle.

Because of their sealed construction, packaging is allowed within the system electronics enclosure (see illustration on page 2). When this is applicable, the quantity of system cabinets and the battery wiring distances are both minimized. Where required, external battery cabinets can be close-nippled to the control panel to house larger batteries with battery chargers available in some battery cabinet sizes.

Battery Details

Charging. These batteries are intended to be used with compatible Simplex battery chargers.

Series Connections. These batteries are required to be connected in series to produce 24 V system voltage. Battery sets must be of identical voltage, model number, appearance, and approximately the same date of manufacture for proper operation.

Testing. Battery capacity testing is recommended to be performed by using a sealed lead-acid battery tester designed to withdraw a minimum of battery charge. The preferred tester applies a variety of amplitude and duration controlled test pulses that compares terminal voltage against those predicted for the specific battery size. (Testing is available through your local Simplex product supplier.)

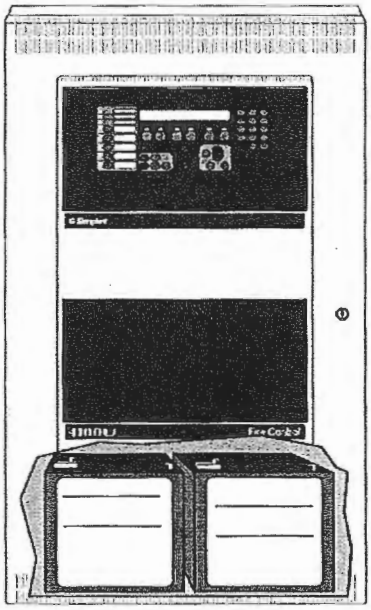

Compatible Sealed Lead-Acid Batteries can be Installed Inside Fire Alarm Control Panel Cabinets

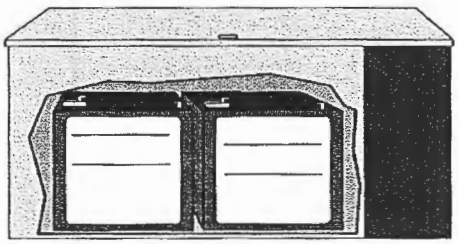

Remote Battery Cabinets are Available for Larger Battery Requirements

Battery Details *(Continued)*

Shipping. Sealed lead-acid batteries are shipped via ground or sea transportation only. They are not shipped via air.

Disposal. Battery chemicals and materials can be recycled. Refer to information shipped with the battery or on its case. Return to the battery manufacturer or to a similarly qualified battery processing facility for proper disposal.

* Refer to details on page 4 and to the referenced individual product data sheets for agency listing status of battery cabinets and chargers. The batteries detailed in this document meet the requirements of UL, ULC, and Factory Mutual for use with respective equipment battery chargers as listed on page 3. Contact your local Simplex product supplier for proper battery selection per system requirements. Listings and approvals under Simplex Time Recorder Co. are the property of Tyco Safety Products Westminster.

Battery Construction Reference

Actual appearance will vary with battery size.

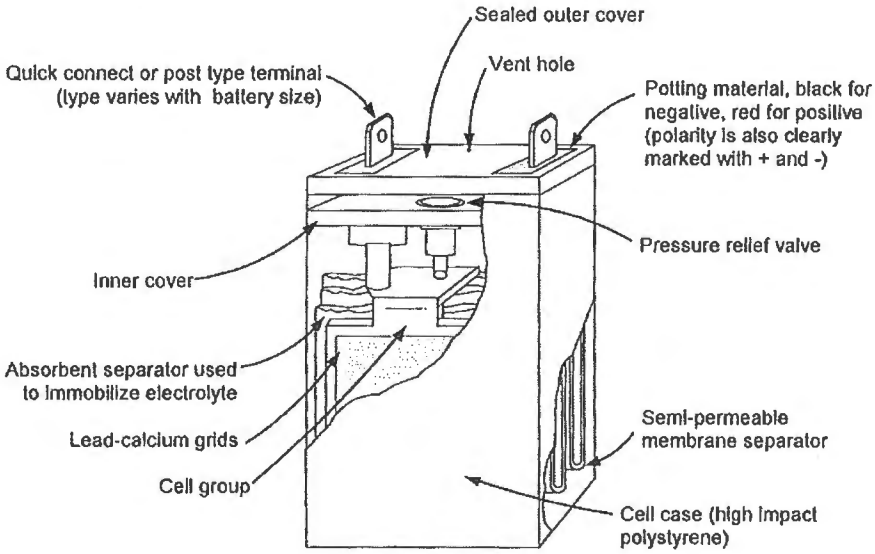

Battery Size Specifications

Battery Model	Capacity @ 20 Hour Discharge Rate	Width*	Depth*	Height with Terminals	Approximate Weight*
2081-9272	6.2 Ah	6-1/8" (156 mm)	2-5/8" (67 mm)	4" (102 mm)	5.75 lbs (2.6 kg)
2081-9274	10 Ah	6" (153 mm)	4-1/16" (103 mm)	4" (102 mm)	9.2 lbs (4.2 kg)
2081-9288	12.7 Ah	6" (153 mm)	4" (102 mm)	4" (102 mm)	9 lbs (4.1 kg)
2081-9275	18 Ah	7-1/4" (184 mm)	3-3/8" (86 mm)	6-5/8" (168 mm)	14.3 lbs (6.5 kg)
2081-9287	25 Ah	6-5/8" (168 mm)	5" (127 mm)	7" (178 mm)	19.4 lbs (8.8 kg)
2081-9271 (rectangular case, typically for service)	33 Ah	12-1/2" (318 mm)	3-3/8" (86 mm)	7-1/16" (179 mm)	26.6 lbs (12.1 kg)
2081-9276 ("square" case, use for new)	33 Ah	7-3/4" (197 mm)	5-1/4" (133 mm)	6-3/4" (171 mm)	26.5 lbs (12 kg)
2081-9296	50 Ah	9-1/2" (241 mm)	5-1/2" (140 mm)	8-7/8" (225 mm)	41.8 lbs (19 kg)
2081-9279	110 Ah	11-3/16" (284 mm)	10-1/2" (267 mm)	9" (230 mm)	82 Lbs (37 kg)

* Dimensions and weight are per battery and are for reference only. Exact size may vary. Refer to the tables on page 3 mounting compatibility. These batteries are 12 V each and series connected for 24 V system use.

NOTE: When wired in series for 24 V output, these batteries are to be of identical voltage, appearance, model number, and approximately the same date of manufacture.

General Battery Specifications

Nominal Voltage Rating	12 Volts per battery
Discharge Rating	20 Hour Rate
Typical Charge/Discharge Cycles	100 to 150
Preferred Charge Temperature Range	60° F to 90° F (15.6°C to 32.2° C)

Battery Compatibility for Fire Alarm Control Panel Mounting

NOTE: Refer to individual fire alarm control panel product data sheets for additional battery application information

Battery Model	Capacity	Simplex Control Panel Model Series (see legend and notes below)									
		4003	4004	4004R	4005	4006 & 4008	4009 (all models)	4010	4100U	4100 & 4120 (2, 4 or 6-Unit)	4020 (2, 4 or 6-Unit)
2081-9272	6.2 Ah	✓	✓	✓	✓	✓	✓	✓	1, 2, or 3 bay	✓	✓
2081-9274	10 Ah	✓	✓	✓	✓	✓	✓	✓	1, 2, or 3 bay	✓	✓
2081-9288	12.7 Ah	✓	NA	✓	✓	✓	✓	✓	1, 2, or 3 bay	✓	✓
2081-9275	18 Ah	✓	NA	Note 3	✓	Ext	Ext	Note 2	1, 2, or 3 bay	✓	✓
2081-9287	25 Ah	NA	NA	Note 3	Ext	Ext	NA	✓	1, 2, or 3 bay	✓	Ext
2081-9271 (rectangular)	33 Ah	NA	NA	Note 3	Ext	NA	NA	Note 3	1, 2, or 3 bay	Ext	Note 4
2081-9276 ("square")	33 Ah	NA	NA	Note 3	Ext	NA	NA	Note 3	1, 2, or 3 bay	✓	Ext
2081-9296	50 Ah	NA	NA	Note 3	NA	NA	NA	Note 3	2 or 3 bay	Ext	Ext
2081-9279	110 Ah	Requires external battery cabinet									

✓ = Can be placed in the respective equipment cabinet

Ext = External battery cabinet is required, refer to selection chart on page 4

NA = Not applicable/not compatible

NOTES:

1. These batteries meet the requirements of UL, ULC, and Factory Mutual for use with respective equipment battery chargers listed above. Contact your local Simplex product supplier for proper battery selection per system requirements.
2. 4010 Cabinets will accommodate 2081-9275, 18 Ah batteries, but will not allow bottom entry conduit.
3. Use 4081 series companion cabinet and charger, refer to page 4.
4. 4020 Cabinets will accommodate 2081-9271, 33 Ah batteries, but will not allow bottom entry conduit.
5. Some control panel models are listed for battery replacement reference only.

External Battery Cabinet Compatibility Reference

Battery Cabinets without Chargers (connects to charger in panel)

Cabinet	Panel Compatibility	2081-9275 18 Ah*	2081-9287 25 Ah	2081-9271 Rectangular 33 Ah	2081-9276 Square 33 Ah	2081-9296 50 Ah	2081-9279 110 Ah
2081-9270	multiple	✓	✓	✓	✓	✓	NA
2081-9280	4100U/4100+	NA	NA	NA	NA	NA	✓
2081-9281 2081-9282	multiple	✓	✓	✓	✓	✓	NA
4009-9801	multiple	✓	✓**	NA	NA	NA	NA
4009-9802	multiple	✓	NA	✓	NA	NA	NA

Battery Cabinets with Chargers

Cabinet	Panel Compatibility	2081-9275 18 Ah*	2081-9287 25 Ah	2081-9271 Rectangular 33 Ah	2081-9276 Square 33 Ah	2081-9296 50 Ah	2081-9279 110 Ah
4081-9301 4081-9302	4004R and 4010	✓	✓	✓	✓	✓	NA
4081-9306 4081-9308	4100U	NA	NA	NA	NA	✓	✓

* Batteries smaller than those listed are normally mounted in the product cabinet

** 25 Ah capacity was effective as of 7/2005.

✓ = Can be placed in the respective equipment cabinet

NA = Not applicable/not compatible

External Battery Cabinet Specification Reference

Battery Cabinets Without Chargers; Shallow Design with Front Door

Model	Color	Listings	Description		Dimensions
2081-9281	Beige	UL and FM	2-Unit, 4100 style cabinet **without** charger; with locking solid door and battery shelf, primarily for use with 50 Ah batteries		25-3/4" W x 20-3/4" H x 6-3/4" D (654 mm x 527 mm x 171 mm)
2081-9282	Red				
4009-9801*	Beige	UL and FM	For up to 25 Ah batteries*	External battery cabinet **without** charger, with locking solid door and battery harness; for close-nippled mounting to fire alarm control panel cabinet	16-1/4" W x 13-1/2" H x 5-3/4" D (413 mm x 343 mm x 146 mm)*
4009-9802	Beige	UL	For up to 33 Ah batteries		25-3/4" W x 20-3/4" H x 4-1/8" D (654 mm x 527 mm x 105 mm)

* Depth increased for 25 Ah batteries effective 7/2005.

Battery Cabinet Without Charger; Deep Design with Hinged Lid

Model	Color	Listings	Description	Dimensions
2081-9270	Red	Not listed	Battery cabinet **without** charger; cabinet has vented front, and hinged lid with support rod and lock on top	26-1/2" W x 12" H x 12" D (673 mm x 305 mm x 305 mm)

Chargers for use with 4010 Fire Alarm Control Panels and 4004R Suppression Release Systems
(refer to data sheet S4081-0001)

Model	Color	Input Voltage	Description	Dimensions
4081-9301	Beige	120 VAC	Battery cabinet **with** charger for the 4010 and 4004R fire alarm control panel; **for up to 50 Ah batteries**; with front door *Listings include: UL, ULC, FM, CSFM, and MEA (NYC), see data sheet for details*	22-1/2" W x16-3/4" H x 8-3/8" D (572 mm x 425 mm x 213 mm)
4081-9302	Red			

Battery Cabinet Without Charger for 110 Ah Batteries; for use with compatible panel mounted chargers
(refer to data sheet S2081-0012)

Model & Listings	Color	Cabinet Description	Compatible Chargers	Charger Description	Dimensions
2081-9280 *Listings include: UL and CSFM*	Red	Battery cabinet for 2081-9279, 110 Ah batteries; includes 80 A battery fuse, terminals and battery connection cables; see data sheet for details	4100-9xxx Series	4100U System Power Supplies (SPS)	26-1/2" W x 12" H x 12" D (673 mm x 305 mm x 305 mm)
			4100-5111 4100-5112 4100-5113	4100U Additional SPS	
			4100-5125 4100-5126 4100-5127	4100U Remote Power Supply (RPS)	
			4100-5120 4100-5121 4100-5122	4100U TrueAlert Addressable Power Supply (TPS)	
			4100-0104 4100-0114 4100-0124	4100 Legacy power supplies	

4100U Compatible Battery Cabinet With Charger for 110 Ah Batteries (for ULC listed systems and for other applications unable to use panel mounted power supply charger; *refer to data sheet S4081-0002*)

Model	Color	Input Voltage	Description	Dimensions
4081-9306	Red	120 VAC	Battery cabinet with charger for up to 110 Ah batteries; **NOTE:** Required for ULC listed charging of 110 Ah batteries; *Listings include: UL, ULC, FM, CSFM, and MEA (NYC), see data sheet for details*	27-7/8" W x 13-1/2" H x 14-5/8" D (708 mm x 343 mm x 371 mm)
4081-9308	Red	220/230/240 VAC, multi-tapped		
4100-9837	Green LED Power-on Indicator Kit, **required for ULC listing,** mounts above access panel using knockout provided			

Simplex

*UL, ULC, CSFM Listed; FM Approved; MEA (NYC) Acceptance**

TrueAlarm® Analog Sensing

TrueAlarm Analog Sensors – Photoelectric, Ionization, and Heat; Standard Bases and Accessories

Features

TrueAlarm® analog sensing provides:

- Digital transmission of analog sensor values via IDNet™ or MAPNET II® two-wire communications**

For use with the following Simplex® products:

- 4010 and 4100U Series control panels; and 4008 Series control panels with reduced feature set (refer to data sheet S4008-0001 for details)
- 4020, 4100, and 4120 Series control panels, Universal Transponders and 2120 TrueAlarm CDTs equipped for MAPNET II operation

Fire alarm control panel provides:

- Peak value logging allowing accurate analysis of each sensor for individual sensitivity selection
- Sensitivity monitoring satisfying NFPA 72® sensitivity testing requirements; automatic individual sensor calibration check verifies sensor integrity
- Automatic environmental compensation, multi-stage alarm operation, and display of sensitivity directly in percent per foot
- Ability to display and print detailed sensor information in plain English language

Photoelectric smoke sensors provide:

- Seven levels of sensitivity from 0.2% to 3.7%

Heat sensors provide:

- Fixed temperature sensing
- Rate-of-rise temperature sensing
- Utility temperature sensing

Ionization smoke sensors provide:

- Three levels of sensitivity; 0.5%, 0.9%, and 1.3%

General features:

- UL listed to Standard 268
- Louvered smoke sensor design enhances smoke capture by directing flow to chamber; entrance areas are minimally visible when ceiling mounted
- Designed for EMI compatibility
- Magnetic test feature is provided
- Optional accessories include remote LED alarm indicator and output relays

Additional base reference:

- For isolator bases, refer to data sheet S4098-0025
- For sounder bases, refer to data sheet S4098-0028
- For photo/heat sensors, refer to data sheet S4098-0024 (single address) and S4098-0033 (dual address)

* These products have been approved by the California State Fire Marshal (CSFM) pursuant to Section 13144.1 of the California Health and Safety Code. See CSFM Listings 7272-0026:218, 7271-0026:231, 7270-0026:216, and 7300-0026:217 for allowable values and/or conditions concerning material presented in this document. It is subject to re-examination, revision, and possible cancellation. Accepted for use – City of New York Department of Buildings – MEA35-93E. Additional listings may be applicable, contact your local Simplex product supplier for the latest status. Listings and approvals under Simplex Time Recorder Co. are the property of Tyco Safety Products Westminster.

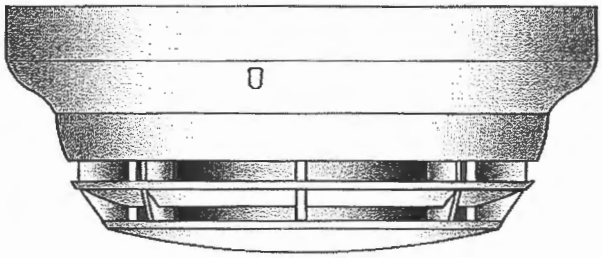

4098-9714 TrueAlarm Photoelectric Sensor Mounted in Base

Description

Digital Communication of Analog Sensing. TrueAlarm analog sensors provide an analog measurement digitally communicated to the host control panel using Simplex addressable communications. At the control panel, the data is analyzed and an average value is determined and stored. An alarm or other abnormal condition is determined by comparing the sensor's present value against its average value and time.

Intelligent Data Evaluation. Monitoring each sensor's average value provides a continuously shifting reference point. This software filtering process compensates for environmental factors (dust, dirt, etc.) and component aging, providing an accurate reference for evaluating new activity. With this filtering, there is a significant reduction in the probability of false or nuisance alarms caused by shifts in sensitivity, either up or down.

Control Panel Selection. Peak activity per sensor is stored to assist in evaluating specific locations. The alarm set point for each TrueAlarm sensor is determined at the host control panel, selectable as more or less sensitive as the individual application requires.

Timed/Multi-Stage Selection. Sensor alarm set points can be programmed for timed automatic sensitivity selection (such as more sensitive at night, less sensitive during day). Control panel programming can also provide multi-stage operation per sensor. For example, a 0.2% level may cause a warning to prompt investigation while a 2.5% level may initiate an alarm.

Sensor Alarm and Trouble LED Indication. Each sensor base's LED pulses to indicate communications with the panel. If the control panel determines a sensor is in alarm, or is dirty or has some other type of trouble, the details are annunciated at the control panel and that sensor base's LED will be turned on steadily. During a system alarm, the control panel will control the LEDs such that an LED indicating a trouble will return to pulsing to help identify the alarmed sensors.

** TrueAlarm analog sensors are protected by one or more of the following U.S. Patents: 5,155,468; 5,173,683; 5,400,014; 5,543,777; 5,710,541; D383,407; D388,352; D392,573. MAPNET II and IDNet addressable communications designs are protected by U.S. Patent No. 4,796,025.

True*Alarm* Sensor Bases and Accessories

Sensor Base Features

Base mounted address selection:

- Address remains with its programmed location
- Accessible from front (DIP switch under sensor)

General features:

- Automatic identification provides default sensitivity when substituting sensor types
- Integral red LED for power-on (pulsing), or alarm or trouble (steady on)
- Locking anti-tamper design mounts on standard outlet box
- Magnetically operated functional test

Sensor Bases

4098-9792, Standard sensor base

4098-9789, Sensor base with wired connections for:

- 2098-9808 Remote LED alarm indicator or 4098-9822 relay (unsupervised)

4098-9791, Sensor base with supervised relay driver output (not compatible with 2120 CDT):

- Relay operation is programmable and can be manually operated from control panel
- Use with remote mount 2098-9737 relay
- Also includes wired connections for remote LED alarm indicator or 4098-9822 relay

Sensor Base Options

2098-9737, Remote or local mount supervised relay:

- DPDT contacts for resistive/suppressed loads, power limited rating of 3 A @ 28 VDC; non-power limited rating of 3 A @ 120 VAC (requires external 24 VDC coil power)

4098-9822, LED Annunciation Relay:

- Activates when base LED is on steady, indicating local alarm or trouble
- DPDT contacts for resistive/suppressed loads, power limited rating of 2 A @ 28 VDC; non-power limited rating of 1/2 A @ 120 VAC, (requires external 24 VDC coil power)

4098-9832, Adapter plate:

- Required for surface or semi-flush mounting to 4" square electrical box and for surface mounting to 4" octagonal box
- Can be used for cosmetic retrofitting to existing 6-3/8" diameter base product

2098-9808, Remote red LED Alarm Indicator:

- Mounts on single gang box (shown in illustration to right)

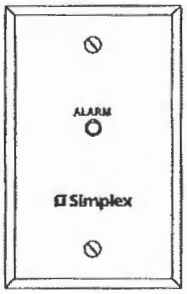

Description

TrueAlarm sensor bases contain integral addressable electronics that constantly monitor the status of the detachable photoelectric, ionization, or heat sensors. Each sensor's output is digitized and transmitted to the system fire alarm control panel every four seconds.

Since TrueAlarm sensors use the same base, different sensor types can be easily interchanged to meet specific location requirements. This feature also allows intentional sensor substitution during building construction. When conditions are temporarily dusty, instead of covering the smoke sensors (causing them to be disabled), heat sensors may be installed without reprogramming the control panel. Although the control panel will indicate an incorrect sensor type, the heat sensor will operate at a default sensitivity providing heat detection for building protection at that location.

Mounting Reference

Electrical Box Requirements: (boxes are by others)

Without relay: 4" octagonal or 4" square, 1-1/2" deep; single gang, 2" deep

With relay : 4" octagonal or 4" square, 1-1/2" deep, with 1-1/2" extension ring

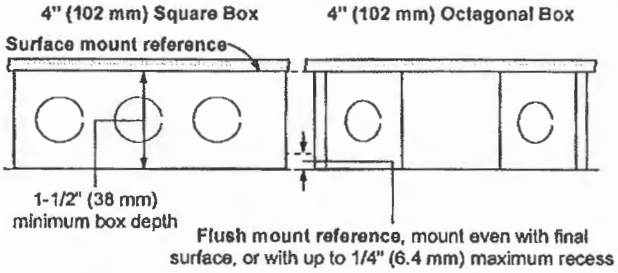

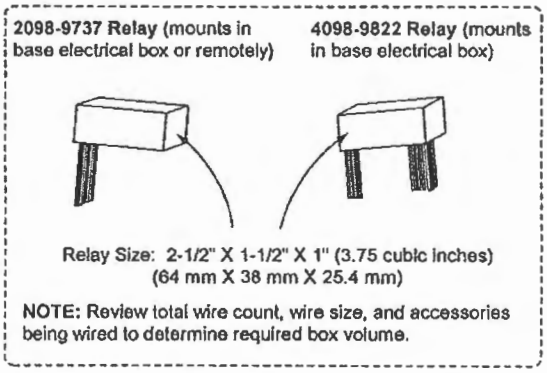

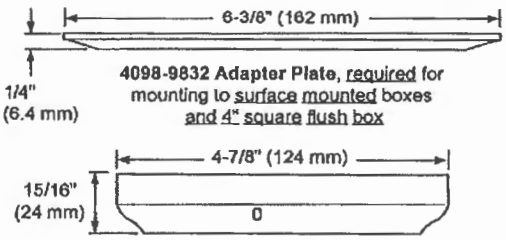

TrueAlarm Bases
4098-9789, -9791, & -9792

Simplex

True*Alert*® Multi-Candela Notification Appliances

*UL, ULC, CSFM Listed; FM Approved; MEA (NYC) Acceptance**

Visible Notification Appliances with Synchronized Flash; Non-Addressable, Smart*Sync*™ Operation Compatible

Features

Visible only (V/O) 24 VDC notification appliances with high output xenon strobe, available for wall or ceiling mount:

- Intensity is selectable as 15, 30, 75, or 110 candela with visible selection jumper secured behind strobe housing
- Operation is compatible with ADA requirements (refer to important installation information on page 3)
- Polarized input allows connection to compatible reverse polarity, supervised notification appliance circuit (NAC)
- Regulated circuit design ensures consistent flash output and provides controlled inrush current
- Rugged, high impact, flame retardant thermoplastic housings are available in red or white with clear lens
- Listed to UL 1971 and ULC S526

Strobes provide synchronized flash for use with:

- 4006, 4008, 4010, and 4100U Series fire alarm control panels with NACs selected to provide strobe synchronization or SmartSync two-wire control**
- 4009 IDNet™ NAC Extenders
- Separate strobe Synchronization Modules that are available for Class B or Class A operation
- Separate SmartSync Control Modules (SCMs) that provide Class B or Class A output from conventional NAC inputs

Strobe housings provides flexible, easy, and convenient semi-flush or surface wall mounting:

- Rear of housing does not extend into box
- Wall mount strobes easily mount to single gang, double gang, or 4-inch square outlet box
- Ceiling mount strobes mount to single gang boxes

Wall mount strobe features:

- Wiring terminals are accessible from the front of the housing providing easy access for installation, inspection, and testing
- Covers are available separately to convert housing color

Optional adapters and wire guards:

- Wall mount strobe adapters are available to cover surface mounted electrical boxes and to adapt to Simplex® 2975-9145 boxes
- UL listed red wire guards are available for wall or ceiling mount strobes*

* Refer to page 2 for guard listing. This product has been approved by the California State Fire Marshal (CSFM) pursuant to Section 13144.1 of the California Health and Safety Code. See CSFM Listing 7125-0026:316 for allowable values and/or conditions concerning material presented in this document. It is subject to re-examination, revision, and possible cancellation. Refer to page 2 for listing status of wire guards. Additional listings may be applicable; contact your local Simplex product supplier for the latest status. Listings and approvals under Simplex Time Recorder Co. are the property of Tyco Safety Products Westminster.

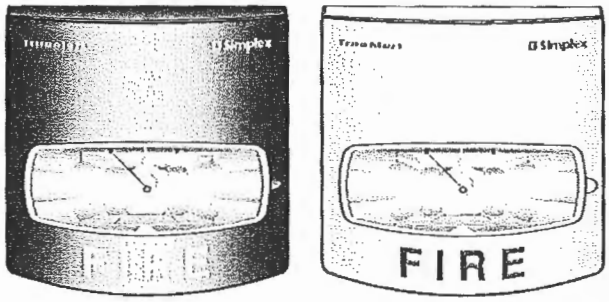

Wall Mount Strobes

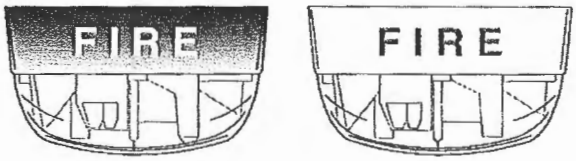

Ceiling Mount Strobes

Description

Multi-Candela TrueAlert synchronized strobes provide convenient installation to standard electrical boxes. The enclosure designs are both impact and vandal resistant and provide a convenient strobe intensity selection. Since each model can be selected for intensity output, on-site model inventory is minimized and changes encountered during construction can be easily accommodated.

Wall mount strobe housings are a one-piece assembly (including lens) that mounts to a single or double gang, or 4" square standard electrical box. The cover can be quickly removed (a tool is required) and covers are available separately for color conversion.

Ceiling mount strobes install using standard single gang electrical boxes. Color choice is determined by model number.

Strobe Intensity Selection

During installation, a selection plug at the back of the housing determines the desired strobe intensity. An attached flag with black letters on a highly visible yellow background allows the selected intensity to be seen at the side of the strobe lens.

Strobe Application Reference

Proper selection of visible notification is dependent on occupancy, location, local codes, and proper applications of: the *National Fire Alarm Code* (NFPA 72), ANSI A117.1; the appropriate model building code: BOCA, ICBO, or SBCCI; and the application guidelines of the Americans with Disabilities Act (ADA).

** Simplex multi-candela SmartSync two-wire horn/strobe appliance operation is protected under one or more of the following U.S. Patent Numbers: 5,559,492; 5,622,427; 5,865,527; 5,886,620; 6,281,789; 6,954,137; 7,005,971; and 7,006,003.

Synchronized Strobes

Multiple Strobes. When multiple strobes and their reflections can be seen from one location, synchronized flashes reduce the probability of photo-sensitive reactions as well as the annoyance and possible distraction of random flashing. These multi-candela strobes are synchronized over a two-wire circuit when connected to compatible NACs, to compatible Synchronized Flash Modules, or to SmartSync Control Modules.

SmartSync Two-Wire Control

Some applications desire the audible notification appliances to be capable of being silenced before the alarm condition is reset (on-until-silenced) while the visible notification appliances are kept activated until the alarm condition is reset (on-until-reset). SmartSync operation mode provides this function using a single circuit (two-wire operation).

SmartSync Control Sources

SmartSync two-wire control is available from:

- 4006, 4008, 4100U, and 4010 Fire Alarm Control Panels (refer to individual product data sheets for more information)
- 4009 IDNet NAC Extenders (refer to data sheet S4009-0002)
- SmartSync Control Module (SCM) Model 4905-9938 (refer to data sheet S4905-0003)

Additional SmartSync compatible notification appliances include separate horns and combination horn/strobe notification appliances.

Product Selection

Multi-Candela Visible Notification Appliances (Strobes)

Model	Mounting	Housing Color	"FIRE" Lettering	Description
4906-9101	Wall	Red	White	Multi-candela strobe with intensity selectable as: 15, 30, 75, or 110 candela; synchronized flash rate; SmartSync two-wire control compatible
4906-9103		White	Red	
4906-9102	Ceiling	Red	White	
4906-9104		White	Red	

Wall Mount Strobe Adapters

Model	Description		Dimensions
4905-9937	Red	Surface Mount Adapter Skirt; use to cover 1-1/2" (38 mm) deep surface mounted boxes	5-3/8" H x 5-1/4" W x 1-5/8" D (136 mm x 133 mm x 41 mm) Total depth with strobe = 4-3/8" (111 mm)
4905-9940	White		
4905-9931	Red Adapter Plate for mounting to Simplex 2975-9145 box (typically for retrofit, may be mounted vertical or horizontal)		8-5/16" x 5-3/4" x 0.060" Thick (211 mm x 146 mm x 1.5 mm)
2975-9145	Red Mounting Box, requires Adapter Plate 4905-9931		7-7/8" x 5-1/8" x 2-3/4" D (200 mm x 130 mm x 70 mm)

Ceiling Mount Strobe Adapter

Model	Description	Dimensions
4905-9910	Surface Mount Adapter Plate; zinc plated; **required for mounting to handy box; not needed when using 4905-9926 guard**	4-7/8" x 3-1/8" x 0.060" D (124 mm x 79 mm x 1.5)

Synchronization Modules (refer to data sheet S4905-0003 for additional information)

Model	Description		Dimensions
4905-9914	Class B	Synchronized Flash Module; epoxy encapsulated with in/out 18 AWG (0.82 mm^2) wire leads, rated for 2 A NAC, requires 5 mA for power	1-3/8" x 2-7/16" x 13/16" (35 mm x 62 mm x 20 mm)
4905-9922	Class A		
4905-9938	SmartSync Control Module with Class B or Class A output; mounts in 4" (102 mm) square box		4" x 4-1/8" x 1-1/4" D (102 mm x 105 mm x 32 mm)

Replacement Covers and Guards

Model	Description		Dimensions
4905-9992	Red cover with white "FIRE" lettering	For Wall mount strobes	5-1/8" H x 5" W x 1-1/2" D (130 mm x 127 mm x 38 mm)
4905-9993	White cover with red "FIRE" lettering		
4905-9961*	Wall mount	Red wire guard with mounting plate, compatible with semi-flush or surface mounted boxes	6-1/16" H x 6-1/16" W x 3-1/8" D (154 mm x 154 mm x 79 mm)
4905-9926*	Ceiling mount		6-1/8" x 4-3/8" x 2-7/8" deep (156 mm x 111 mm x 73 mm)

* UL listed by Space Age Electronics Inc.

Strobe Specifications

Wall Mount or Ceiling Mount, Common Specifications

Rated Voltage Range		Regulated 24 VDC; see Note 1 below			
Flash Rate		1 Hz			
Synchronized NAC Loading		Up to 35 synchronized strobes maximum per NAC			
Temperature Range		32° to 122° F (0° to 50° C)			
Humidity Range		10% to 93%, non-condensing at 100° F (38° C)			
Connections		Terminal blocks for 18 AWG to 12 AWG (0.82 mm^2 to 3.31 mm^2); two wires per terminal for in/out wiring			
Wall Mount	Housing Dimensions (with lens)	5-1/8" H x 5" W x 2-3/4" D (130 mm x 127 mm x 70 mm)			
	Maximum RMS Current Rating per Strobe Setting (see Note 2 below)	**15 cd**	**30 cd**	**75 cd**	**110 cd**
		60 mA	**94 mA**	**186 mA**	**252 mA**
	Reference RMS Currents at other voltages 18 VDC	53 mA	84 mA	165 mA	224 mA
	Reference RMS Currents at other voltages 24 VDC	40 mA	63 mA	124 mA	168 mA
Ceiling Mount	Housing Dimensions (with lens)	4-3/4" L x 2-5/16" W x 2-5/8" D (121 mm x 75 mm x 67 mm)			
	Maximum RMS Current Rating per Strobe Setting (see Note 2 below)	**15 cd**	**30 cd**	**75 cd**	**110 cd**
		75 mA	**125 mA**	**233 mA**	**316 mA**
	Reference RMS Currents at other voltages 18 VDC	67 mA	111 mA	207 mA	281 mA
	Reference RMS Currents at other voltages 24 VDC	50 mA	83 mA	155 mA	211 mA

NOTES:

1. "Regulated 24 VDC" refers to the voltage range of 16 to 33 VDC per UL Standard 1971, *Signaling Devices for the Hearing Impaired*, changes effective May 1, 2004. This voltage range is the absolute operating range. Operation outside of this range may cause permanent damage to the strobe. Please note that 16 VDC is the lowest operating voltage that is allowed at the last appliance on the NAC under worst case conditions.
2. The maximum RMS current listed is the device nameplate rating. Strobe designs are constant wattage and the maximum RMS current rating occurs at the lowest allowable operating voltage. (RMS is root mean square and refers to the effective value of a varying current waveform.)

Installation Reference, Surface or Semi-Flush Wall Mounting

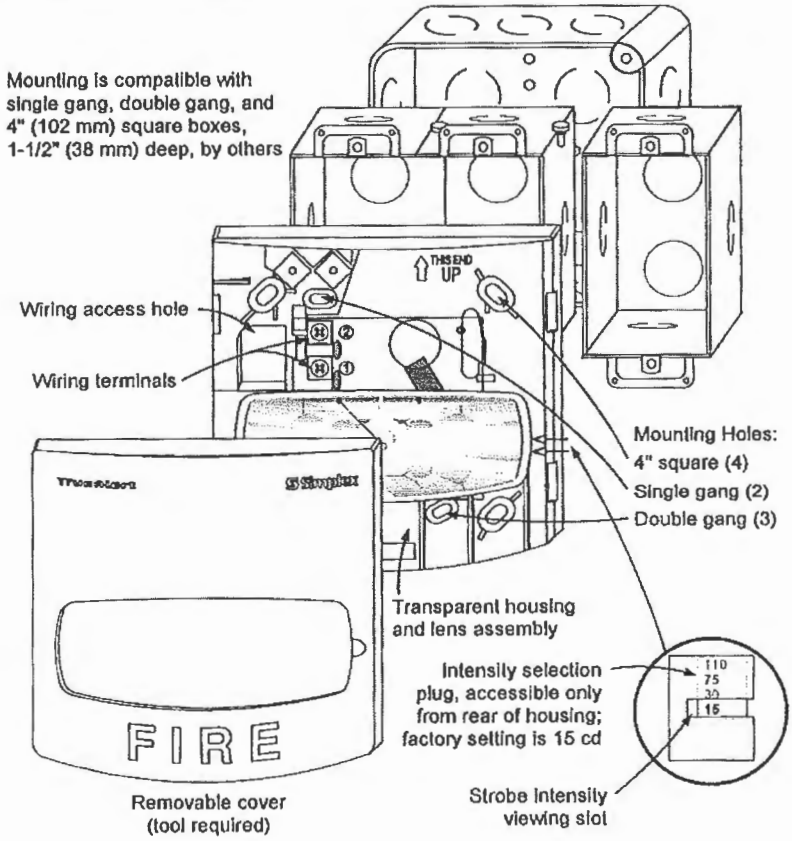

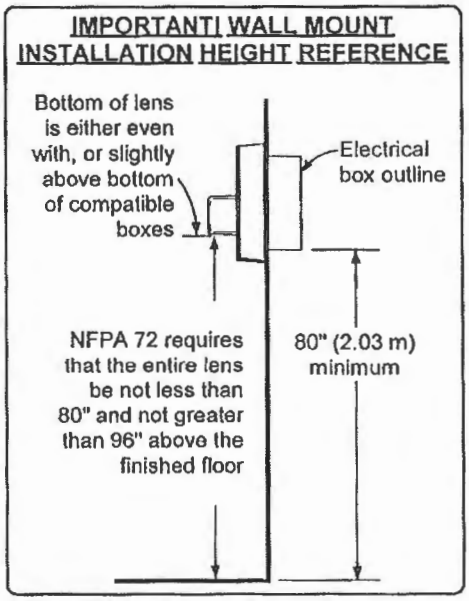

Ceiling Mount Strobe Installation Reference

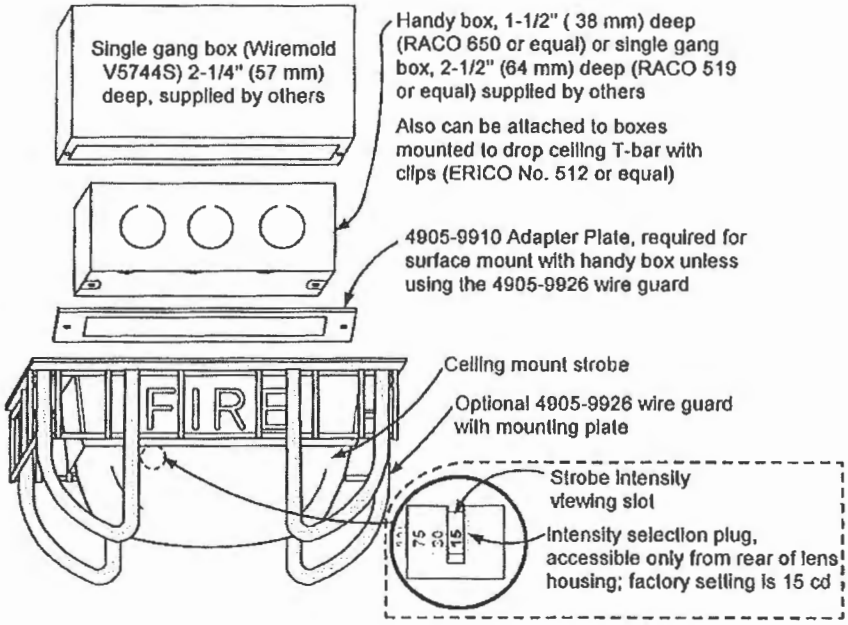

Wall Mount Installation Reference; Adapter Plate, Guard, and Adapter Skirt

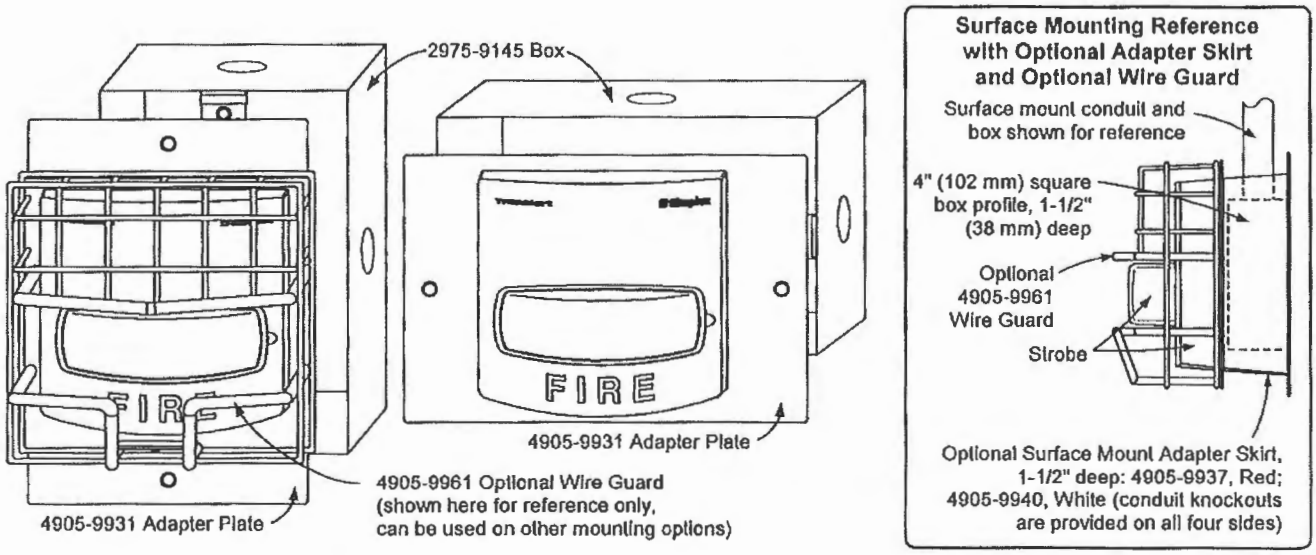

Strobe Application Selection

Proper selection of visible notification is dependent on occupancy, location, local codes, and proper applications of: the *National Fire Alarm Code* (NFPA 72), ANSI A117.1; the appropriate model building code: BOCA, ICBO, or SBCCI; and the application guidelines of the Americans with Disabilities Act (ADA).

Synchronized Strobes

Multiple Strobes. When multiple strobes and their reflections can be seen from one location, synchronized flashes reduce the probability of photo-sensitive reactions as well as the annoyance and possible distraction of random flashing. The multi-candela strobes of these A/Vs are synchronized by the controlling SmartSync operation NAC.

SmartSync Two-Wire Control

SmartSync operation mode allows a two-wire circuit to provide the ability to activate both the horn and strobe on the same NAC and then allow the horn to be silenced while the strobe remains flashing. The horn operates as "on-until-silenced" while the strobe operation is "on-until-reset."

SmartSync Control Sources

- 4006, 4008, 4100U, and 4010 Fire Alarm Control Panels (refer to individual product data sheets for more information)
- 4009 IDNet NAC Extender (refer to data sheet S4009-0002)
- SmartSync Control Module (SCM) 4905-9938 (refer to data sheet S4905-0003)

Additional SmartSync compatible notification appliances include separate horns and combination horn/strobe notification appliances.

Product Selection

Multi-Candela A/Vs

Model	Mounting	Housing Color	"FIRE" Lettering	Description
4906-9127	Wall	Red	White	Horn with Multi-Candela Strobe; strobe intensity selectable as: 15, 30, 75, or 110 candela; operates with SmartSync two-wire control
4906-9129		White	Red	
4906-9128	Ceiling	Red	White	
4906-9130		White	Red	

Wall Mount A/V Accessories

Model	Description		Dimensions
4905-9937	Red	Surface Mount Adapter Skirt; use to cover 1-1/2" (38 mm) deep surface mounted boxes	5-3/8" H x 5-1/4" W x 1-5/8" D (136 mm x 133 mm x 41 mm) depth with strobe = 4-3/8" (111 mm)
4905-9940	White		
4905-9931	Red Adapter Plate for mounting to Simplex 2975-9145 box (typically for retrofit, may be mounted vertical or horizontal)		8-5/16" x 5-3/4" x 0.060" Thick (211 mm x 146 mm x 1.5 mm)
2975-9145	Red Mounting Box, requires Adapter Plate 4905-9931		7-7/8" x 5-1/8" x 2-3/4" D (200 mm x 130 mm x 70 mm)
4905-9838	Optional Sound Damper; package of 20; field installed adhesive backed horn output attenuator; reduces output 5 to 6 dBA **NOTE:** After Sound Damper installation, measure sound level to ensure compliance with applicable code requirements		1-3/4" Diameter (44.5 mm) with 0.31" (8 mm) sound opening

SmartSync Control Module

Model	Description	Dimensions
4905-9938	SmartSync Control Module with Class B or Class A output; mounts in 4" (102 mm) square box; refer to data sheet S4905-0003 for details	4" x 4-1/8" x 1-1/4" D (102 mm x 105 mm x 32 mm)

Replacement Covers for Wall Mount A/Vs

Model	Description	Dimensions
4905-9994	Red cover with white "FIRE" lettering	5-1/8" H x 5" W x 1-1/2" D (130 mm x 127 mm x 38 mm)
4905-9995	White cover with red "FIRE" lettering	

Wire Guards and Ceiling Mount A/V Adapter

Model	Description			Dimensions
4905-9961*	Wall mount red wire guard with mounting plate, compatible with semi-flush or surface mounted boxes			6-1/16" H x 6-1/16" W x 3-1/8" D (154 mm x 154 mm x 79 mm)
4905-9927*	Ceiling Mount	Red Wire Guard for mounting to flush mounted electrical box		8-1/2" x 6-1/8" x 3" (216 mm x 156 mm x 76 mm)
4905-9928*		Red Adapter Plate, required to mount guard to surface mounted electrical box		9" x 7" (229 mm x 178 mm)
4905-9915		White	Surface Mount Adapter Box Extension, use to cover 1-1/2" deep surface mounted boxes	4-3/4" x 6-7/8" x 1-1/2" deep, (121 mm x 175 mm x 38 mm)
4905-9916		Red		

* UL listed by Space Age Electronics Inc.

A/V Specifications

Wall Mount or Ceiling Mount, Common Specifications					
Rated Voltage Range		Regulated 24 DC; see Note 1 below			
Flash Rate and Synchronized NAC Loading		1 Hz; with up to 35 synchronized strobes maximum per NAC			
Environmental; Temperature and Humidity		32° to 122° F (0° to 50° C); 10% to 93%, non-condensing at 100° F (38° C)			
Connections		Terminal blocks for 18 AWG to 12 AWG (0.82 mm^2 to 3.31 mm^2) ; two wires per terminal for In/out wiring			
Horn Output Characteristics		2400 to 3700 Hz sweep, modulated at 120 Hz rate			
Horn Output Ratings (see Note 2 for polar dispersion reference)	Model Type	Wall Mount		Ceiling Mount	
	Sound Type (see Note 2)	Steady	Coded	Steady	Coded
	Reverberant Chamber Test, per UL 464 @ 10 ft (~3 m)	86 dBA	82 dBA	87 dBA	83 dBA
	Anechoic Chamber Test, per ULC S525 @ 3 m (~10 ft)	88 dBA	94 dBA	90 dBA	98 dBA
Wall Mount	Housing Dimensions (with lens)	5-1/8" H x 5" W x 2-3/4" D (130 mm x 127 mm x 70 mm)			
	Maximum RMS Current Rating per Strobe Setting (see Note 3 below)	**15 cd**	**30 cd**	**75 cd**	**110 cd**
		75 mA	**116 mA**	**221 mA**	**285 mA**
	Reference RMS Currents at other voltages 18 VDC	67 mA	103 mA	196 mA	253 mA
	Reference RMS Currents at other voltages 24 VDC	50 mA	77 mA	147 mA	190 mA
Ceiling Mount	Housing Dimensions (with lens)	4-3/4 L" x 6-7/8" W x 2-5/8" D (121 mm x 175 mm x 67 mm)			
	Maximum RMS Current Rating per Strobe Setting (see Note 3 below)	**15 cd**	**30 cd**	**75 cd**	**110 cd**
		86 mA	**132 mA**	**250 mA**	**320 mA**
	Reference RMS Currents at other voltages 18 VDC	76 mA	117 mA	222 mA	284 mA
	Reference RMS Currents at other voltages 24 VDC	57 mA	88 mA	167 mA	213 mA

NOTES:

1. "Regulated 24 DC" refers to the voltage range of 16 to 33 VDC per UL Standard 1971, *Signaling Devices for the Hearing Impaired*, changes effective May 1, 2004. This voltage range is the absolute operating range. Operation outside of this range may cause permanent damage to the appliance. Please note that 16 VDC is the lowest operating voltage that is allowed at the last appliance on the NAC under worst case conditions.
2. Coded values are typical of the output measured with a Temporal coded or a March Time coded pulse and with a sound level meter reading on a "fast" setting. Polar dispersion per ULC S525 testing = -3 dBA at +/-40° off-axis; -6 dBA at +/- 50° off-axis.
3. Currents are with horn on steady. The maximum RMS current listed is the device nameplate rating. Strobe designs are constant wattage and the maximum RMS current rating occurs at the lowest allowable operating voltage. (RMS is root mean square and refers to the effective value of a varying current waveform.)

Installation Reference, Surface or Semi-Flush Mounting

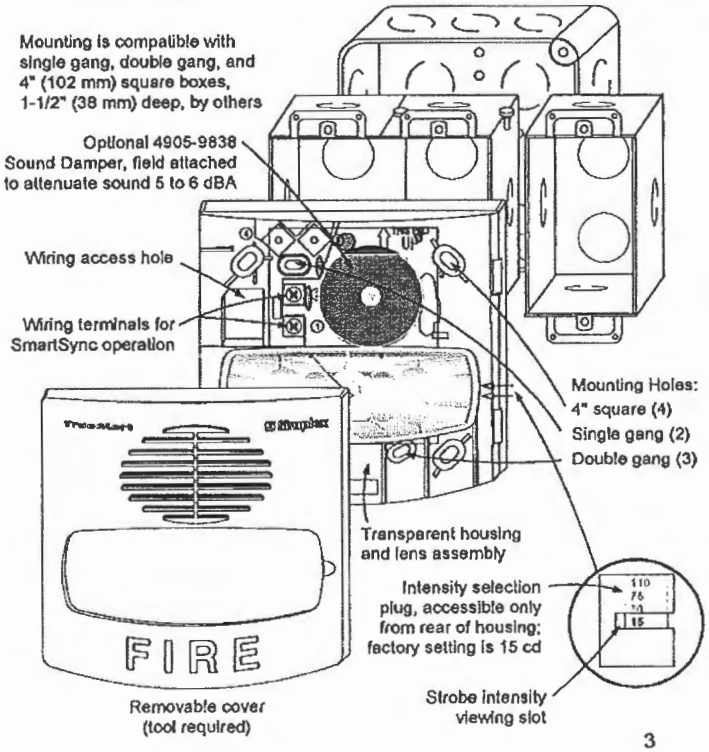

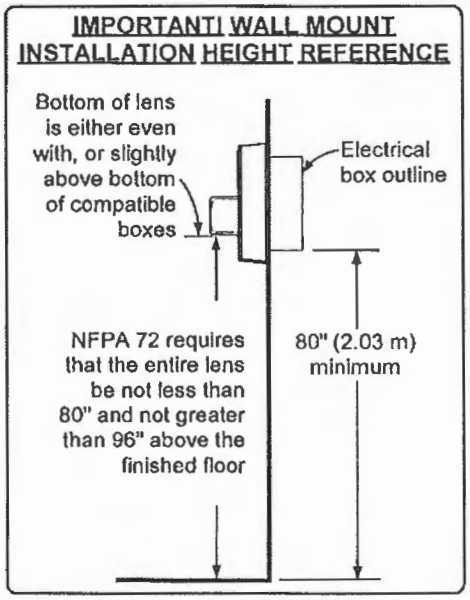

Ceiling Mount A/V and Guard Installation Reference

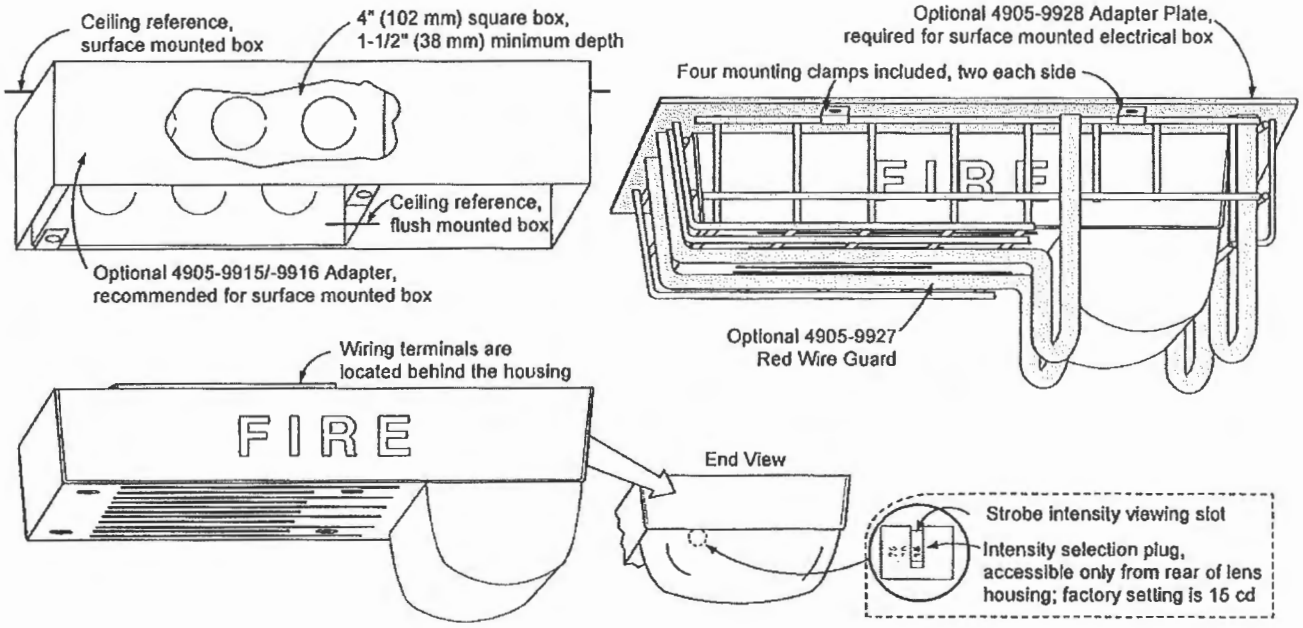

Wall Mount Installation Reference; Adapter Plate, Guard, and Adapter Skirt

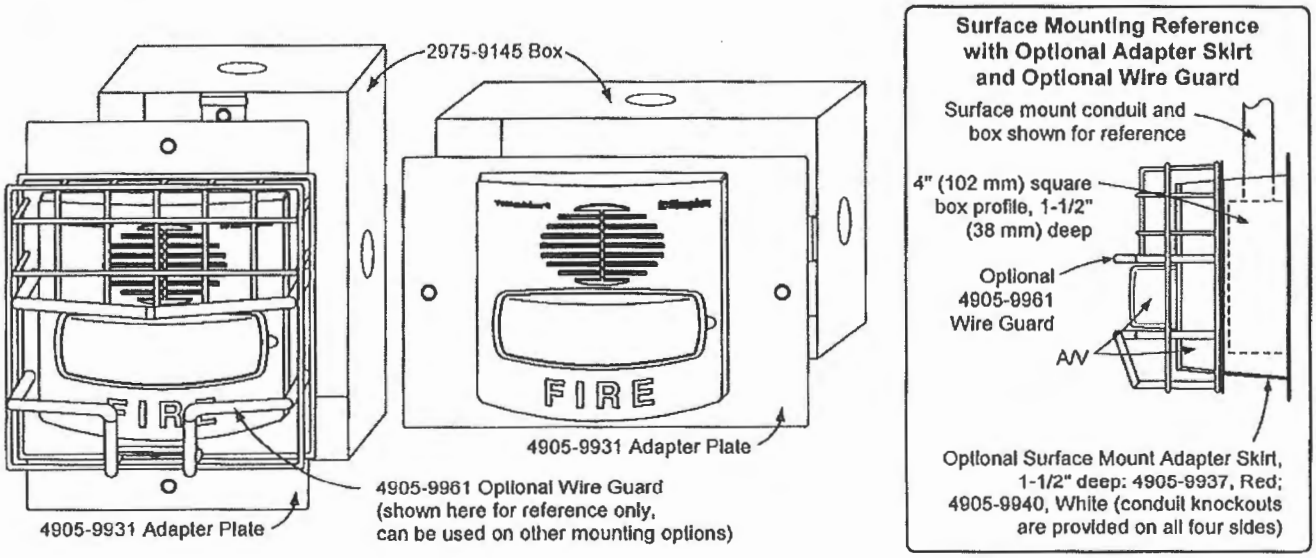

Simplex

*UL, ULC, CSFM Listed; FM Approved; MEA (NYC) Acceptance**

Multi-Application Peripherals

IDNet™ or MAPNET II® Communicating Devices
Addressable Manual Stations

Features

Individually addressable manual fire alarm stations with:

- Power and data supplied via IDNet or MAPNET II addressable communications using a single wire pair**
- Operation that complies with ADA requirements
- Pull lever that protrudes when alarmed
- Break-rod supplied (use is optional)
- Models are available with single or double action (breakglass or push) operation
- UL listed to Standard 38

Compatible with the following Simplex® control panels:

- Model Series 4008, 4010, 4100U, 4020, 4100, and 4120 fire alarm control panels equipped with either IDNet or MAPNET II communications
- Model Series 2120 Communicating Device Transponders (CDTs) equipped with MAPNET II communications

Compact construction:

- Electronics module enclosure minimizes dust infiltration
- Allows mounting in standard electrical boxes
- Screw terminals for wiring connections

Tamper resistant reset key lock (keyed same as Simplex fire alarm cabinets)

Multiple mounting options:

- Surface or semi-flush with standard boxes or matching Simplex boxes
- Flush mount adapter kit
- Adapters are available for retrofitting to commonly available existing boxes

Description

The Simplex model 4099-9001 addressable station combines the familiar Simplex manual station housing with a compact communication module that is easily installed to satisfy demanding applications. Its integral individual addressable module (IAM) constantly monitors status and communicates changes to the connected control panel via IDNet or MAPNET II communications wiring.

* Refer to page 2 for specific model listings. This product has been approved by the California State Fire Marshal (CSFM) pursuant to Section 13144.1 of the California Health and Safety Code. See CSFM Listing 7150-0026:224 for allowable values and/or conditions concerning material presented in this document. It is subject to re-examination, revision, and possible cancellation. Accepted for use – City of New York Department of Buildings – MEA35-93E. Additional listings may be applicable; contact your local Simplex product supplier for the latest status. Listings and approvals under Simplex Time Recorder Co. are the property of Tyco Safety Products Westminster.

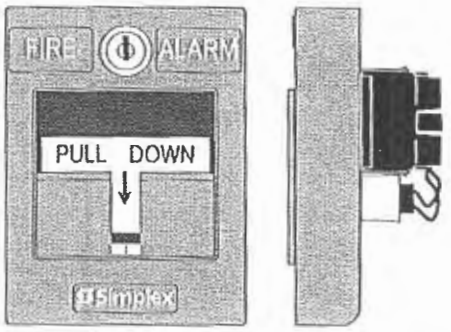

4099-9001 Addressable Manual Station
(front and side view)

4099-9002
Breakglass

4099-9003
Push

With 2099-9828
Institutional
Cover kit

Operation

Activation of the Simplex 4099-9001 single manual station requires a firm downward pull to activate the alarm switch. Completing the action breaks an internal plastic break-rod (visible below the pull lever, use is optional). The use of a break-rod can be a deterrent to vandalism without interfering with the minimum pull requirements needed for easy activation. The pull lever latches into the alarm position and remains extended out of the housing to provide a visible indication.

Double Action Stations (Breakglass) require the operator to strike the front mounted hammer to break the glass and expose the recessed pull lever. The pull lever then operates as a single action station.

Double Action Stations (Push Type) require that a spring loaded interference plate (marked PUSH) be pushed back to access the pull lever of the single action station.

Station reset requires the use of a key to reset the manual station lever and deactivate the alarm switch. (If the break-rod is used, it must be replaced.)

Station testing is performed by physical activation of the pull lever. Electrical testing can be also performed by unlocking the station housing to activate the alarm switch.

** IDNet and MAPNET II addressable communications designs are protected by U.S. Patent No. 4,796,025; 5,966,002; and 6,034,601.

Addressable Manual Station Product Selection

Addressable Manual Stations, Red Housing with White Letters and White Pull Lever

Model	Description	Housing	Pull Lever	Listings
4099-9001	Single action, English	FIRE ALARM	PULL DOWN	UL, ULC, FM, CSFM, MEA
4099-9001CB	Single action, Bilingual English and French	FEU FIRE	TIREZ PULL	ULC, FM
4099-9001CF	Single action, French	ALARME FEU	ABAISSEZ	
4099-9002	Double action, Breakglass operation, English	FIRE ALARM	PULL DOWN	UL, ULC, FM, CSFM, MEA
4099-9003	Double action, Push operation, English			

Accessories

Model	Description	
2975-9178	Surface mount steel box, red	Refer to page 3 for dimensions
2975-9022	Cast aluminum surface mount box, red	
2099-9813	Semi-flush trim plate for double gang switch box, red	Typically for retrofit, refer to page 4
2099-9814	Surface trim plate for Wiremold box V5744-2, red	
2099-9819	Flush mount adapter kit, black	Refer to page 4 for details
2099-9820	Flush mount adapter kit, beige	
2099-9803	Replacement breakglass	
2099-9804	Replacement break-rod	
2099-9828	Institutional cover kit for field installation on 4099-9001	

Specifications

Power and Communications	IDNet or MAPNET II communications, 1 address per station
Address Means	Dipswitch, 8 position
Wire Connections	Screw terminal for in/out wiring, for 18 to 14 AWG wire
UL Listed Temperature Range	32° to 120° F (0° to 49° C) intended for indoor operation
Humidity Range	Up to 93% RH at 100° F (38° F)
Housing Color	Red with white raised lettering
Material	Housing and pull lever are Lexan® polycarbonate or equal
Pull Lever Color	White with red raised lettering
Housing Dimensions	5" H x 3-3/4" W x 1" D (127 mm x 95 mm x 25 mm)

Addressable Manual Station Semi-Flush Mounting

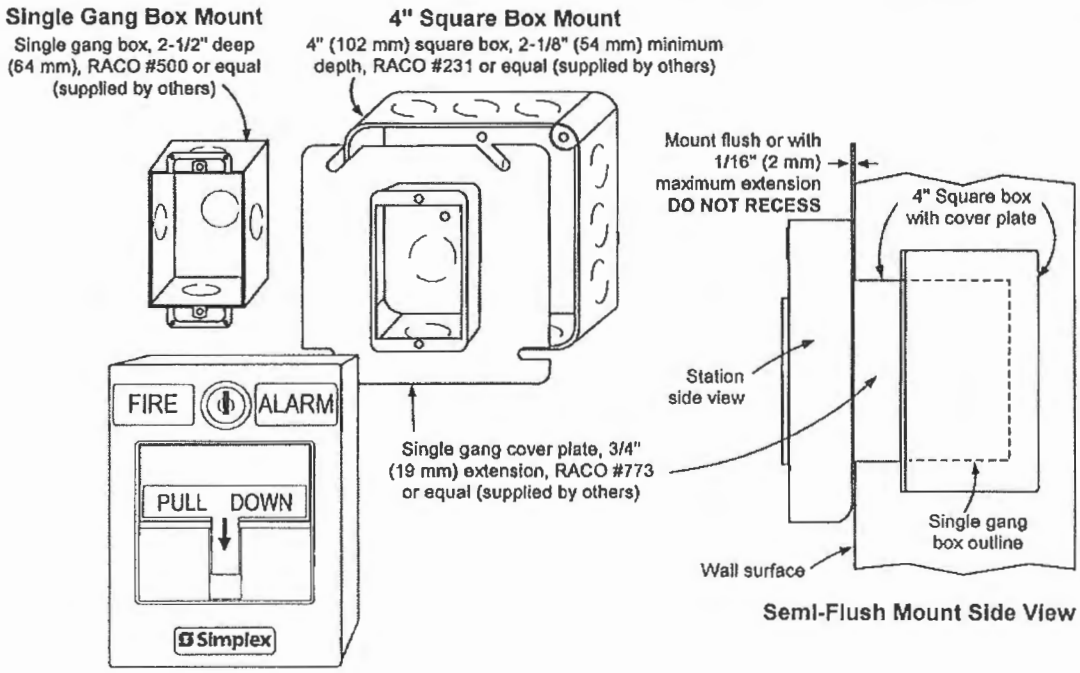

Addressable Manual Stations Surface Mounting

Preferred Mounting. For surface mounting of these addressable manual stations, the preferred electrical boxes are shown in the illustration to the right.

Additional Mounting Reference. Refer to page 4 for Wiremold box mounting compatibility.

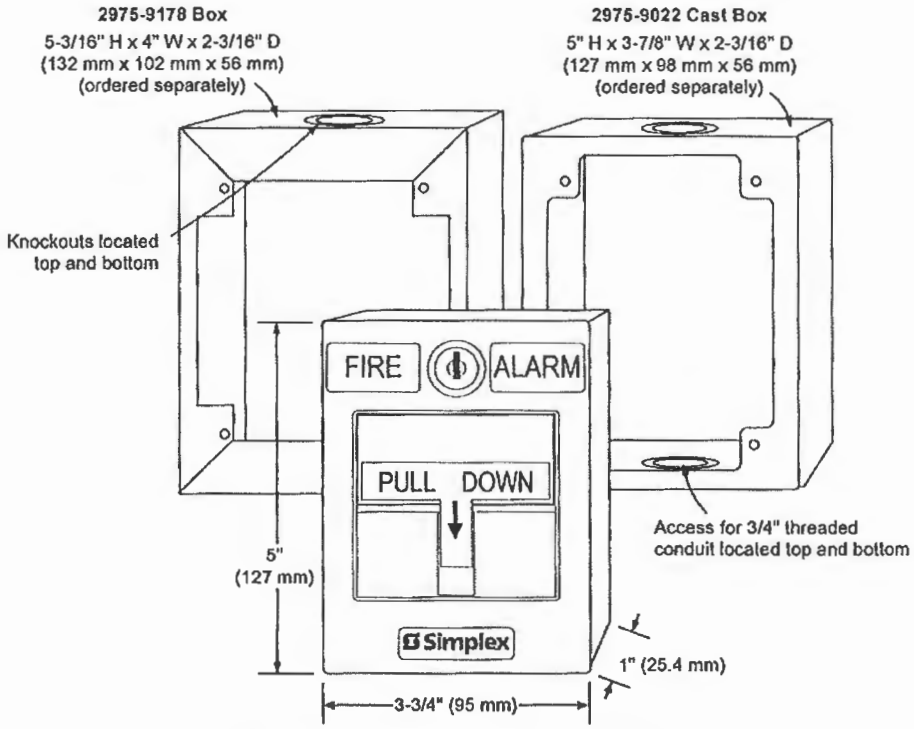

4099 Series Addressable Manual Station

Surface Mount Side View with Internal Detail

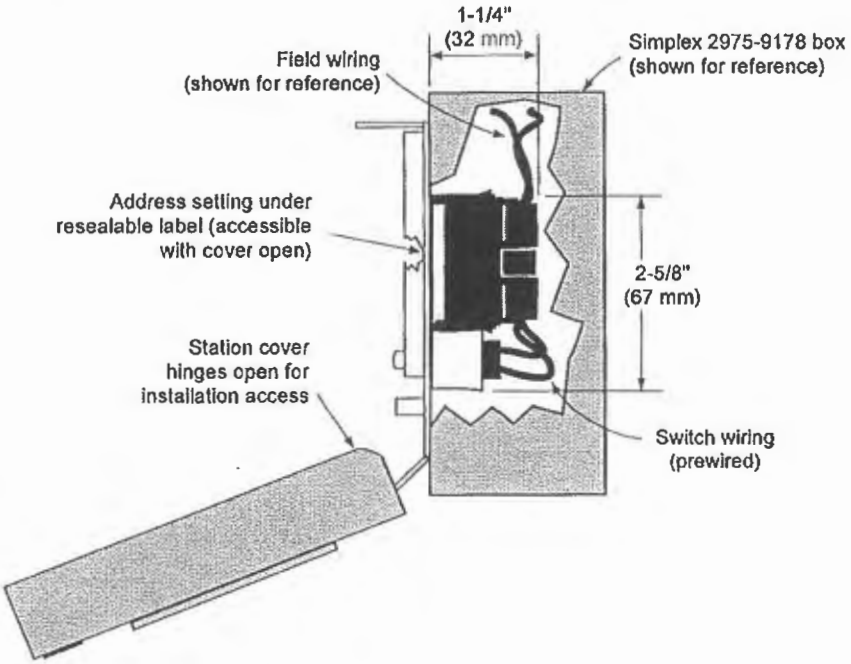

Application Reference

Refer to NFPA 72, the *National Fire Alarm Code*, and all applicable local codes for complete requirements for manual stations. The following summarizes the basic requirements.

1. Stations shall be located in the normal path of exit and distributed in the protected area such that they are unobstructed and readily accessible.
2. Mounting shall be with the operable part not less than 3-1/2 ft (1.1 m) and not more than 4-1/2 ft (1.37 m) above floor level.
3. At least one station shall be provided on each floor. Additional stations shall be provided to obtain a travel distance not more than 200 ft (61 m) to the nearest station from any point in the building.
4. When manual station coverage appears limited in any way, additional stations should be installed.

Addressable Manual Station, Additional Mounting Information

For retrofit and new installations, additional compatible mounting boxes and the required adapter plates are shown in the illustration to the right.

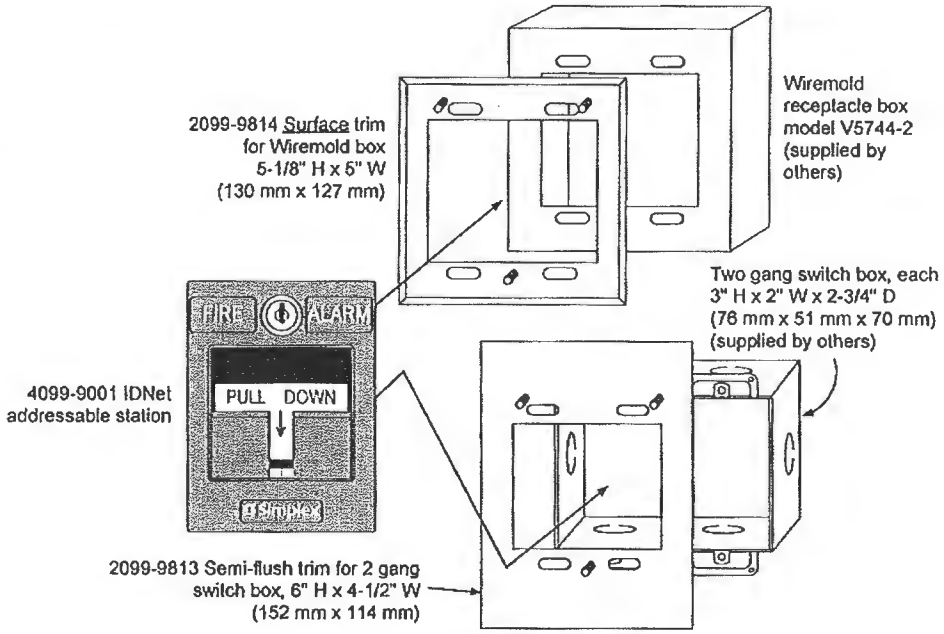

Addressable Manual Station, Flush Mounting Information

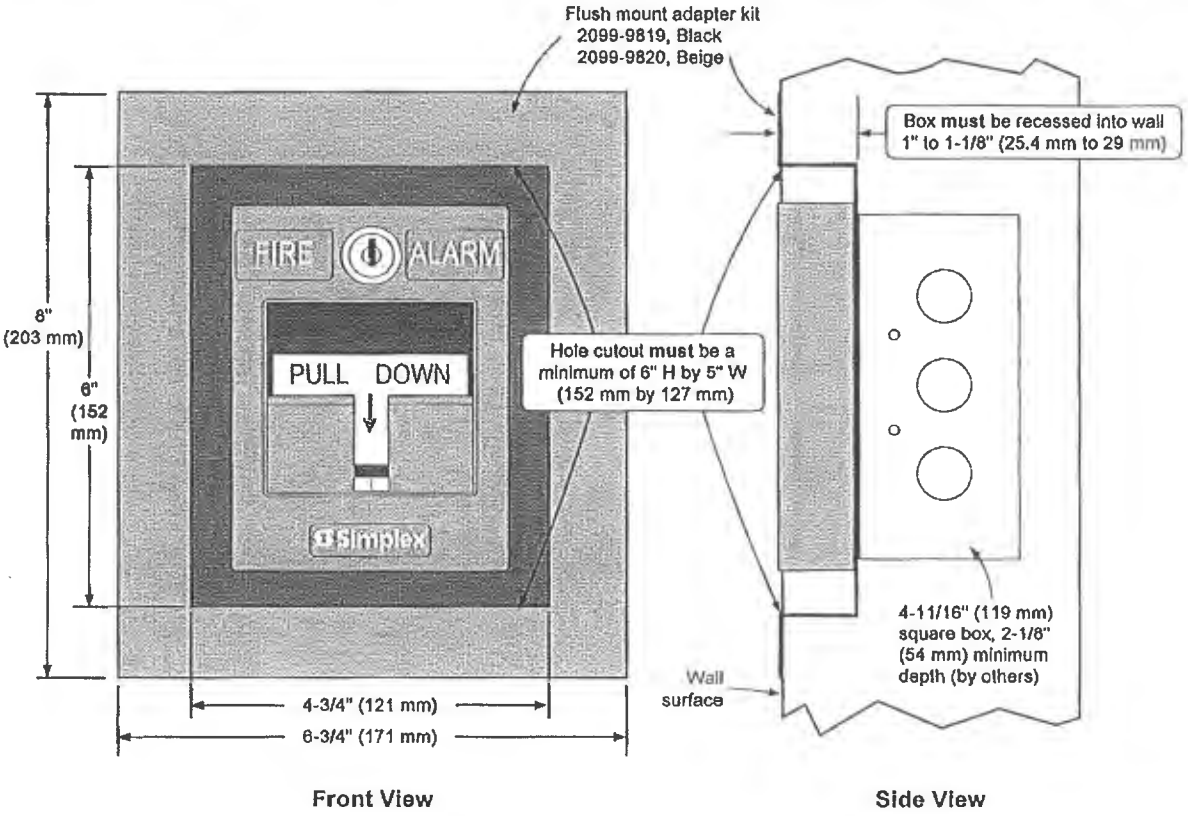

Simplex

Multi-Application Peripherals

*UL, ULC, CSFM Listed; FM Approved; MEA (NYC) Acceptance**

IDNet™ and MAPNET II® Communicating Devices, Individual Addressable Modules (IAMs)

Features

IDNet or MAPNET II addressable communications supply both data and power over a single wire pair to provide:**

- Supervised Class B monitoring of normally open, dry contacts
- Total wiring distance from IAM to supervision resistor(s) of up to 500 ft (152 m)
- Monitored connection is compatible with Simplex® 2081-9044 Overvoltage Protectors for outdoor wiring or electrically noisy applications
- For use in indoor locations up to 158° F (70° C) such as attic spaces or similar applications

For use with following Simplex control panels:

- Model Series 4008, 4010, and 4100U fire alarm control panels for IDNet communications
- Model Series 4100/4100U, 4120, 4020, and 2120 Communicating Device Transponders (CDTs) equipped with MAPNET II communications

Model 4090-9001:

- Enclosed design minimizes dust infiltration
- Mounts in standard single gang electrical box
- Screw terminals for wiring connections
- Visible LED flashes to indicate communications
- Optional covers are available to allow LED to be viewed after installation (requires mounting bracket, ordered separately)

Model 4090-9051:

- Encapsulated design for extended exposure to high humidity (LED is not present on this model)
- Color coded 18 AWG leads for wiring

IDNet communications provides current limited monitoring:

- Provides monitoring of tamper switch (supervisory) and waterflow switch (alarm) on same circuit using one point
- Available with IDNet communications only

Multiple operation modes are available and are selectable at the control panel:

- Contact closure status can be tracked
- Momentary contact closure conditions can be selected at the panel to be latched or tracked (not available with the 2120 CDT)

UL listed to Standard 864

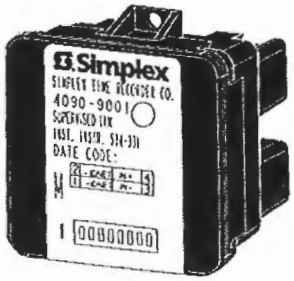

4090-9001 Supervised IAM
(shown approximately 3/4 size)

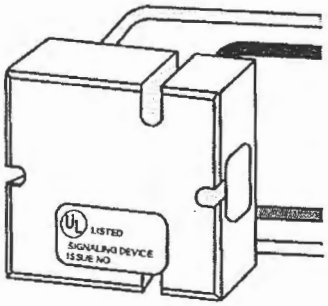

4090-9051 Supervised IAM
(shown approximately 3/4 size)

Description

Individual addressable modules (IAMs) receive both power and communications from a two-wire MAPNET II or IDNet circuit. They provide location specific addressability to a single initiating device (such as single station smoke detector alarm contacts or heat detector contacts) or multiple devices at the same location by monitoring normally open dry contacts and the wiring to an end-of-line resistor.

Model 4090-9001 is packaged in a thermoplastic housing and provides screw terminal connections and a status indicating LED.

Model 4090-9051 is an encapsulated package with wire leads. It does not provide a status indicating LED.

* These products have been approved by the California State Fire Marshal (CSFM) pursuant to Section 13144.1 of the California Health and Safety Code. See CSFM Listing 7300-0026:223 for allowable values and/or conditions concerning material presented in this document. It is subject to re-examination, revision, and possible cancellation. Accepted for use – City of New York Department of Buildings – MEA35-93E. Additional listings may be applicable; contact your local Simplex product supplier for the latest status. Listings and approvals under Simplex Time Recorder Co. are the property of Tyco Safety Products Westminster.

** IDNet and MAPNET II addressable communications are protected under U.S. Patent Nos. 4,796,025; 5,966,002; and 6,034,601.

Operation

Contact Closure. Closure of the monitored contact(s) initiates an alarm or other response as programmed at the fire alarm control panel. An open in the monitored circuit wiring will cause a trouble to be reported.

Panel Selections. Selections can be made at the control panel to maintain the alarm condition if the initiating device contacts are momentary, such as from a rate-of-rise heat detector, or to track the device contact status (not available with the 2120 CDT).

Current Limited Operation Applications

For use with IDNet communications only, these IAMs can provide quad-state sensing of normal, open circuit, short circuit, and current limited conditions. (Program type is "T-sense.") With the proper end-of-line and current limiting resistors, dual functions such as tamper switch and waterflow switch monitoring can be determined and communicated by a single addressable point.

IAM Product Selection

Model	Description
4090-9001	Supervised IAM, mounted in thermoplastic housing with screw terminals; see applicable options below
4090-9051	Supervised IAM, encapsulated with wire leads

Optional Trim Plates and Mounting Bracket for Model 4090-9001

Model	Description	
4090-9806	For semi-flush mounted box	Trim plate with LED viewing window, requires 4090-9810 mounting bracket, includes mounting screws; galvanized steel
4090-9807	For surface mounted box	
4090-9810	Mounting bracket, mounts IAM to electrical box and provides screw holes for trim plate, **required for optional trim plates**	

End-of-Line Resistor Harnesses (ordered separately as required)

Model	Reference No.	Description	
4081-9004	733-886	6.8 kΩ, 1/2 W; Standard end-of-line resistor harness for N.O. contact supervision	
4081-9003	733-896	4.7 kΩ, 1/2 W	Use for current limited monitoring applications
4081-9005	733-984	1.8 kΩ, 1/2 W	

Specifications

Electrical

Power and Communications		MAPNET II or IDNet, auto selected, 1 address per IAM
Input Requirements		Normally open, dry contacts
Wire Connections	4090-9001	Screw terminals for in/out wiring, 18 to 14 AWG wire (0.82 mm^2 to 2.08 mm^2)
	4090-9051	Color coded wire leads, 18 AWG (0.82 mm^2), 8" long (203 mm)
Reference Documents	Installation Instructions	574-331 for 4090-9001; 579-572 for 4090-9151
	Field Wiring Diagrams	842-073 for IDNet operation; 841-804 for MAPNET II operation

Wiring Distances

Distance from IAM to Contacts	500 ft (152 m) maximum without protectors
	400 ft (122 m) maximum with 2081-9044 Overvoltage Protectors
Wiring Distance Reference per channel, MAPNET II or IDNet Communications	2500 ft (762 m) maximum from fire alarm control panel
	10,000 ft (3048 m) maximum total wiring distance (including T-Taps)

Mechanical

Dimensions	4090-9001	1-9/16" W x 1-3/4" H x 1-1/4" D (40 mm x 44 mm x 32 mm)
	4090-9051	1-9/16" W x 1-9/16" H x 9/16" D (40 mm x 40 mm x 14 mm)
Housing Material, 4090-9001		Black thermoplastic
Encapsulation Material, 4090-9051		Epoxy, beige
Temperature Range		32° to 158° F (0° to 70° C); intended for indoor operation
Humidity Range		Up to 93% RH at 100° F (38° C)

Mounting Information

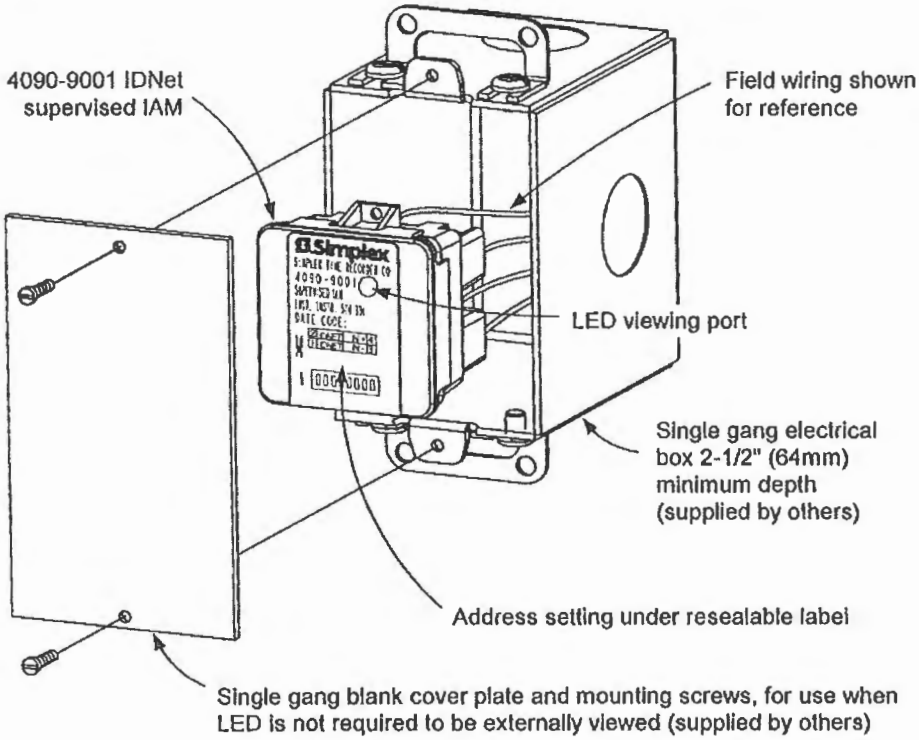

Mounting Reference, Single Gang Blank Cover Plate

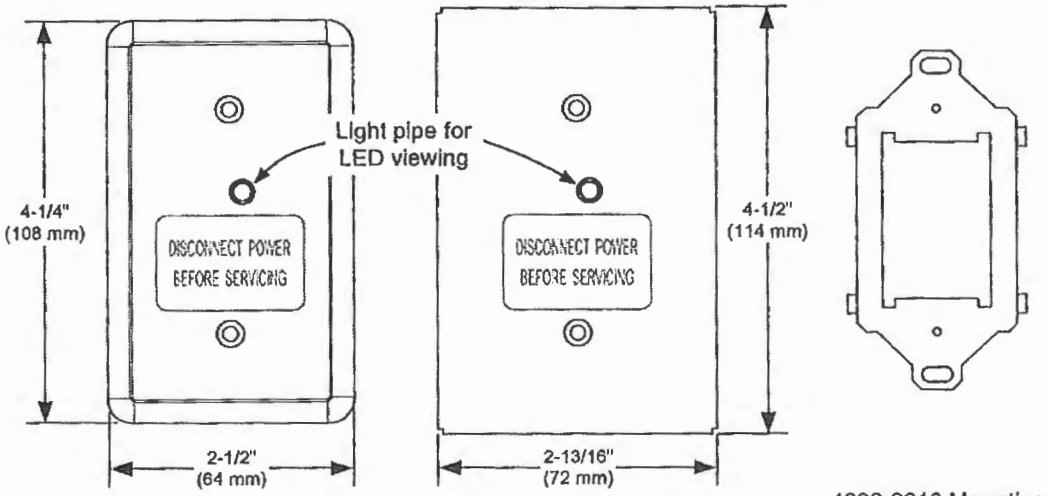

4090-9806, Trim plate for semi-flush mounted box

4090-9807, Trim plate for surface mounted box

4090-9810 Mounting bracket, ordered separately

NOTE: These mounting plates require mounting bracket 4090-9810.

Optional Trim Plates and Mounting Bracket for Visible LED

4090-9051 Mounting Information

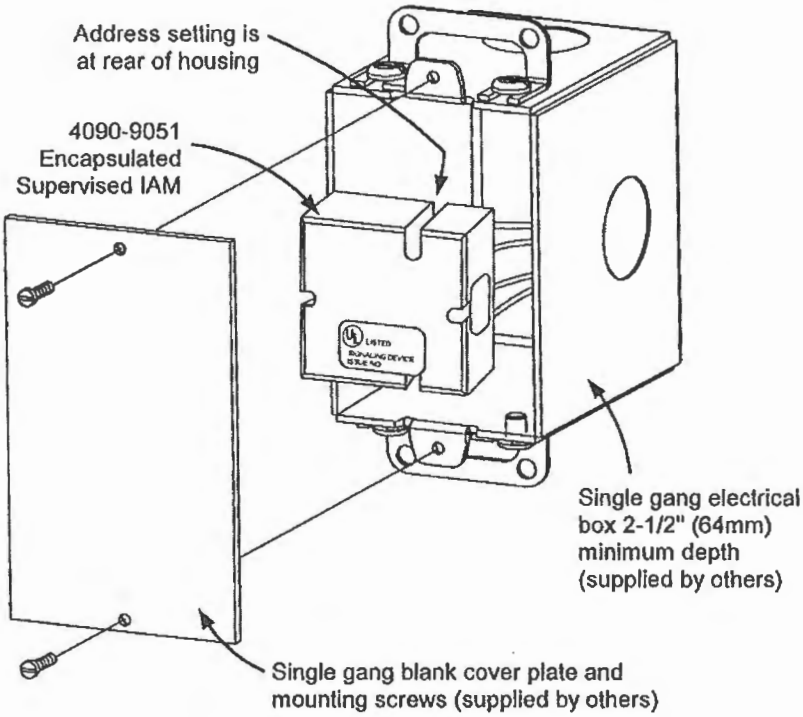

Simplex

*UL, ULC Listed; FM, CSFM, and MEA (NYC) Approved**

Multi-Application Peripherals

IDNet™ Communicating Devices
Model 4090-9002 Relay IAM

Features

IDNet addressable interface modules for use with Simplex® models 4010 and 4100U fire alarm control panels**

4090-9002, Individual Addressable Relay Module (Relay IAM):

- A single addressable point provides control and status tracking of a Form "C" contact
- Low power latching relay design allows IDNet communications to supply both data and module power

Compact, sealed construction:

- Enclosed design minimizes dust infiltration
- Mounts in standard 4" square electrical box
- Screw terminals for wiring connections
- Visible LED flashes to indicate communications
- Optional covers are available to allow LED to be viewed after installation

UL listed to Standard 864

Description

IDNet Relay IAMs allow fire alarm control panels to control a remotely located Form "C" contact using IDNet addressable communications for both data and module power. Typical applications would be for switching local power for control functions such as elevator capture, or control of HVAC components, pressurization fans, dampers, etc. Relay status is also communicated requiring only one device address.

Product Selection

Model	Description
4090-9002	Relay IAM

Optional Trim Plates

Model	Description	
4090-9801	Trim plate with LED viewing window, includes mounting screws; galvanized steel	For semi-flush mounted box
4090-9802		For surface mounted box

* This product has been approved by the California State Fire Marshal (CSFM) pursuant to Section 13144.1 of the California Health and Safety Code. See CSFM Listing 7300-0026:223 for allowable values and/or conditions concerning material presented in this document. It is subject to re-examination, revision, and possible cancellation. Accepted for use – City of New York Department of Buildings – MEA35-93E. Additional listings may be applicable; contact your local Simplex product supplier for the latest status. Listings and approvals under Simplex Time Recorder Co. are the property of Tyco Safety Products Westminster.

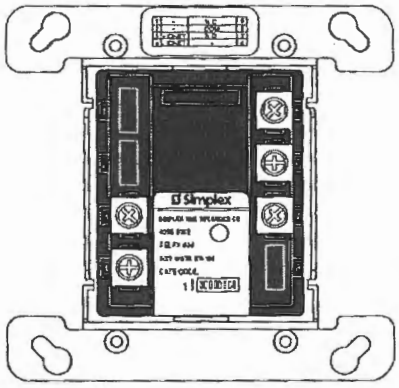

4090 Series IDNet Relay IAM Package
(shown approximately 1/2 size)

Specifications

(Refer to Installation Instructions 574-184 for additional information.)

Communications		4010 or 4100U IDNet, 1 address per device
Relay IAM Power		Supplied by IDNet communications
Contact Ratings	Type	Form C, SPDT
	Power-Limited	2 A @ 24 VDC, for transient suppressed loads
		1 A @ 24 VDC for inductive loads
	Nonpower-Limited	1/2 A @ 120 VAC, for transient suppressed loads
Wire Connections		Screw terminals for in/out wiring, 18 to 14 AWG wire (0.82 to 2.08 mm²)
IDNet Wiring Reference		Up to 2500 ft (762 m) from fire alarm control panel
		Up to 10,000 ft (3048 m) total wiring distance (including T-Taps)
		Compatible with Simplex 2081-9044 Overvoltage Protectors
Dimensions		4-1/8" H x 4-1/8" W x 1-3/8" D (105 mm x 105 mm x 35 mm)
Housing Material		Black thermoplastic
Mounting Plate Material		Sheet metal, galvanized
Temperature Range		32° to 120° F (0° to 49° C), intended for indoor operation
Humidity Range		Up to 93% RH at 100° F (38° C)

** IDNet addressable communications are protected by U.S. Patent No. 4,796,025.

Relay IAM Mounting Information

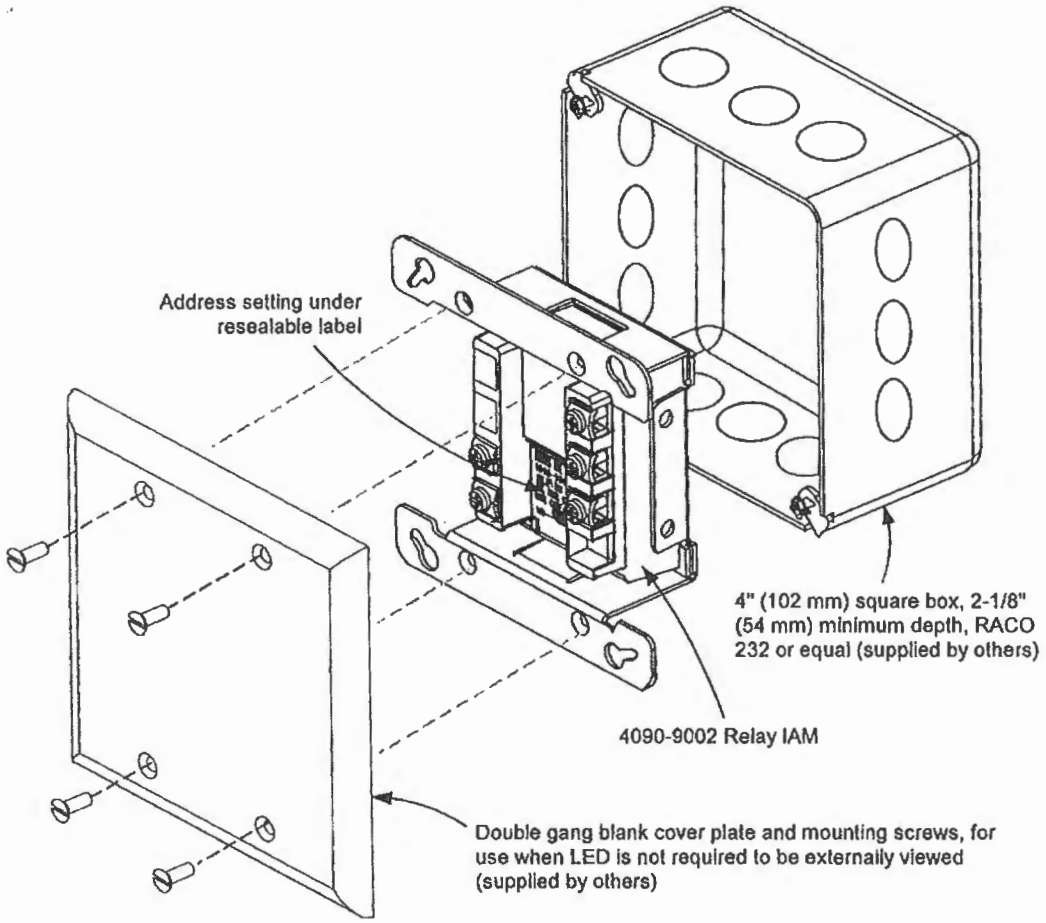

Mounting Reference, Double Gang Blank Cover Plate

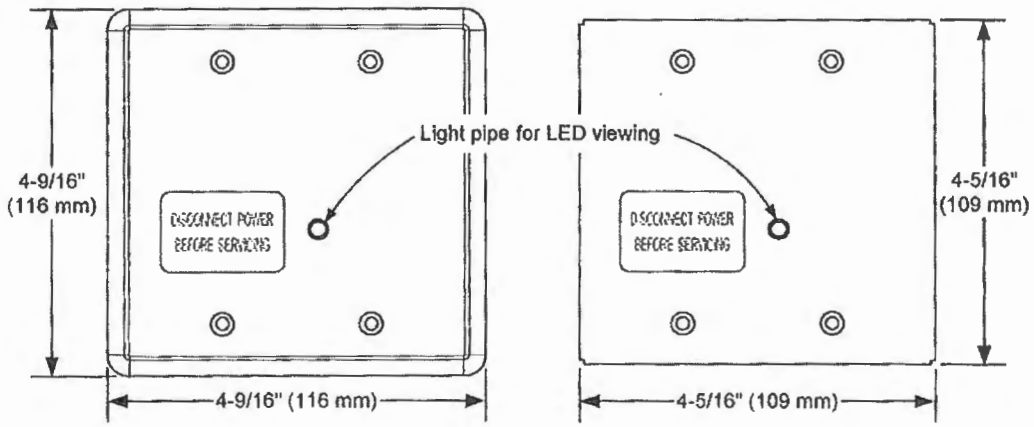

4090-9801, Trim plate for semi-flush mounted box

4090-9802, Trim plate for surface mounted box

Optional Trim Plates for Visible LED

7744F/7788F

UL Listed

AES CORPORATION | IntelliNet For Alarm Monitoring

RF Subscriber Unit

UL Fire, AA Burglary and NFPA-72 Compliant

UL Listed

UL Listed Central Station

Remote Station

864 Ed. 9, 827, 1610, 365, 681

CSFM

NFPA RF Section 8.6.3.5

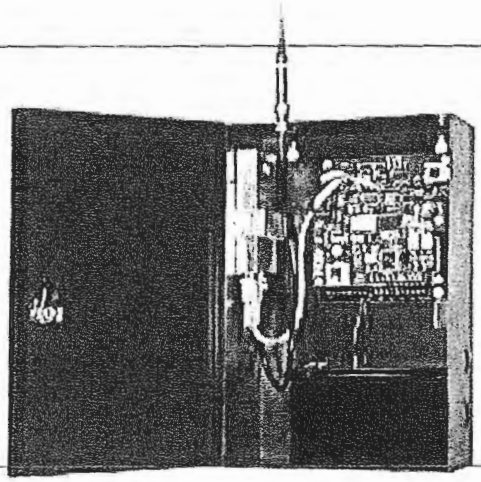

- **Options for Full Data for Fire and Burglary**
- **Available in 7744F & 7788F Zone Configurations**
- **Built-in Power Supply and Battery Charger**
- **Local Annunciation Options on Board**

Advanced Wireless Alarm Monitoring

The 7744F/7788F smart subscriber unit links an alarm panel to an alarm monitoring central station. This confirmed message delivery transceiver and repeater is housed in a full size locking steel cabinet for superior performance. The 7744F/7788F supports a wide range of inputs such as NO/NC/EOL and direct voltage. It automatically senses wire and antenna cuts, and monitors battery and AC power status. Advanced status reporting, self-diagnostics and a built-in power supply make the 7744F/7788F the first choice for all wireless alarm communication needs.

Full Data for Fire and Burglary

Use with the optional Firetap for full fire data or the IntelliTap for full fire and burglary data.

Available Configurations	Available Options
7744F – 4 reversing polarity inputs plus 4 programmable EOL inputs	FireTap 7770
7788F – Programmable EOL inputs with 8 zones	IntelliTap 7067
	NEMA 4 Enclosure
	High Gain Antenna
	Additional Back Up Battery
	Available in Burglary Beige or Fire Red

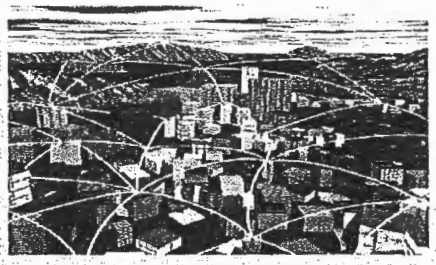

Wireless mesh networking is an innovative technology adopted by many industries with applications that need to communicate data over a large geographic area with a high level of reliability at a low total cost of ownership.

The advanced design and 2-way communications capability provides easy installation, expansion, and management when compared to alternative communication methods, both wired and wireless.

7744F/7788F
RF Subscriber Unit

Technical Specifications

Radio
Standard CSAA frequency ranges: 450-470 MHz and 130-174 MHz, VHF and UHF. Others available

Standard Output Power
2 watts (requires FCC license)

Power Input
16.5 VAC, 40VA UL listed
Class II transformer required

Voltage
12 VDC nominal

Current
175mA standby; 800mA transmit

Alarm Signal Inputs
- 4 individually programmable Zones: NO/NC/EOL, trouble restore
- RS-232
- Reversing voltage (7744F only) 12 or 24 VDC

Operating Temperature Range
0° to 50°C, 32° to 122°F

Storage Temperature Range
-10° to 60°C, 14° to 140°F

Relative Humidity Range
0-85% RHC non-condensing

Back up Battery
12V, 7.5 AHr

Low Battery Reporting
22.5-minute test cycle

AC Status
Reports to central station after approximately 60 minutes without AC power, reports power restored after approximately 60 minutes of restored power. programmable from 60 to 180 minutes

Antenna Cut (local reporting)
Form 'C' Contact 1 AMP

Size
13.25"H x 8.5"W x 4.3"D
34cm x 21.5cm x 11cm

Weight
6.4 lbs, 2.9 Kilograms
(excluding battery)

Colors
Available in standard
Burglary Beige or Fire Red
Please specify when ordering

Available Options
- 7788F RF subscriber unit with 8 EOL inputs
- 7744F RF subscriber unit with 4 EOL inputs and 4 reverse polarity inputs
- 7770 - FireTap
- 7067 - IntelliTap
- NEMA 4 Enclosure

Please specify when ordering

AES-*IntelliNet*™ is the industry leader in delivering high quality wireless mesh networks to the fire and security industry in commercial, corporate, government, and educational applications with its broad line of products and advanced network management tools. Users of AES-*IntelliNet* networks have gained significant revenue, communications, and cost advantages while meeting the high standards of reliability required for the fire and security industry. AES-*IntelliNet* alarm monitoring systems are deployed at hundreds of thousands of locations in over 130 countries.

AES CORPORATION | *IntelliNet* For Alarm Monitoring

For more information
Call 800-AES-NETS (800-237-6387)

AES Corporation | 285 Newbury Street | Peabody, MA 01960 USA
Tel. +1 978-535-7310 | Fax +1 978-535-7313 | Email info@aes-intellinet.com
Web www.aes-intellinet.com

Available configurations

- 7788F, 8 EOL inputs
- 7744F, 4 EOL inputs w/4 reverse polarity inputs

7744F/7788F/08/09

CITY OF PORTLAND, MAINE

Department of Building Inspections

Original Receipt

Nov 20 20 11

Received from [illegible]

Location of Work 15 [illegible] Dr.

Cost of Construction $_____ Building Fee:_____

Permit Fee $_____ Site Fee: _____

Certificate of Occupancy Fee: _____

Total: _____

Building (IL) ✓ Plumbing (I5) ___ Electrical (I2) ___ Site Plan (U2) ___

Other Fuel Burn

CBL: 340 [illegible]

Check #: [illegible] **Total Collected $** 100.00

No work is to be started until permit issued.
Please keep original receipt for your records.

Taken by: [illegible]

WHITE - Applicant's Copy
YELLOW - Office Copy
PINK - Permit Copy