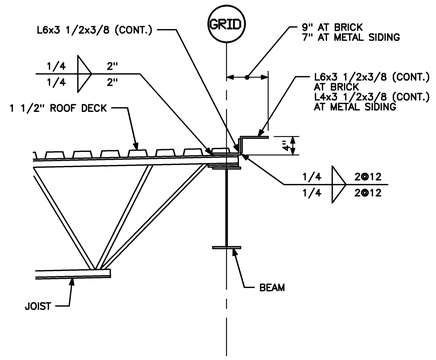

TYP. ROOF EDGE DETAIL (NO PARAPET) — C4

3/4" = 1'-0" | 0 1/2' 1' 2' | REF: S30.1

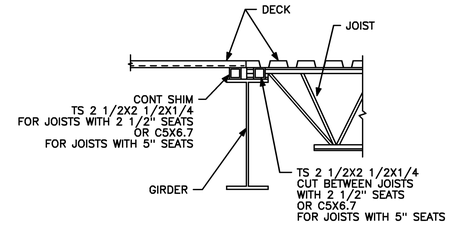

DETAIL AT CHANGE IN DECK DIRECTION OTHER THAN 90°

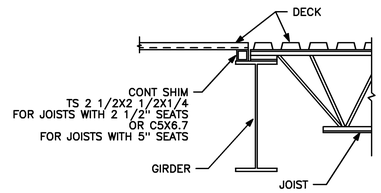

DETAIL AT 90° CHANGE IN DECK DIRECTION

DECK SUPPORT DETAILS — C3

NOT TO SCALE | REF: S60.3

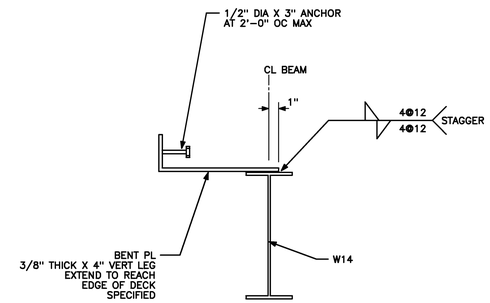

SECTION — C2

1 1/2" = 1'-0" | 0 4" 8" 1' | REF: S20.1, S20.2

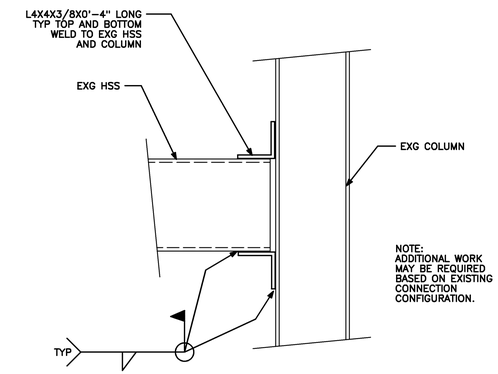

SECTION AT EXG CONN UPGRADE — C1

1 1/2" = 1'-0" | 0 4" 8" 1' | REF: S60.3

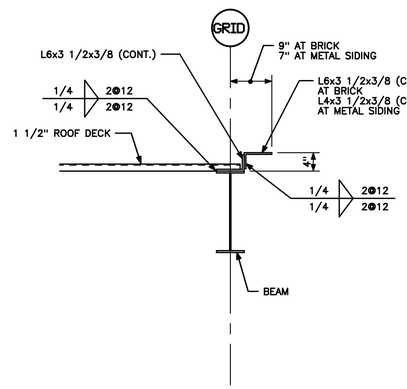

TYP. ROOF EDGE DETAIL (NO PARAPET) — B4

3/4" = 1'-0" | 0 1/2' 1' 2' | REF: S30.1

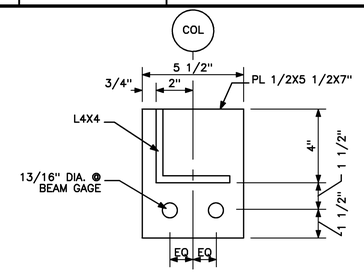

SECTION — B3B

3" = 1'-0" | 0 2" 4" 6" | REF: S60.3

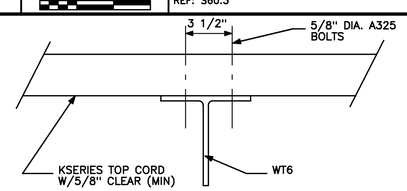

SECTION — B3A

NO SCALE | REF: S60.3

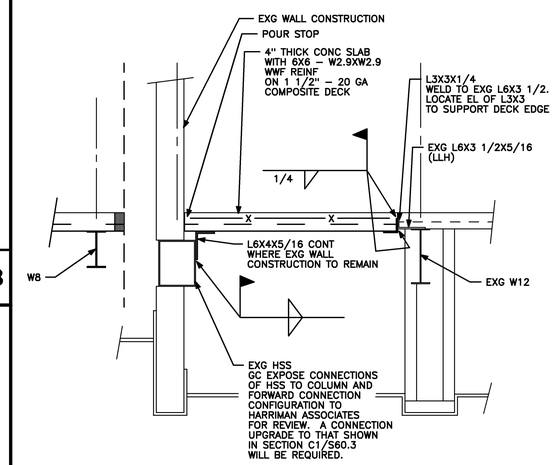

SECTION AT CONN TO EXG BLDG — B2

3/4" = 1'-0" | 0 1/2' 1' 2' | REF: NA

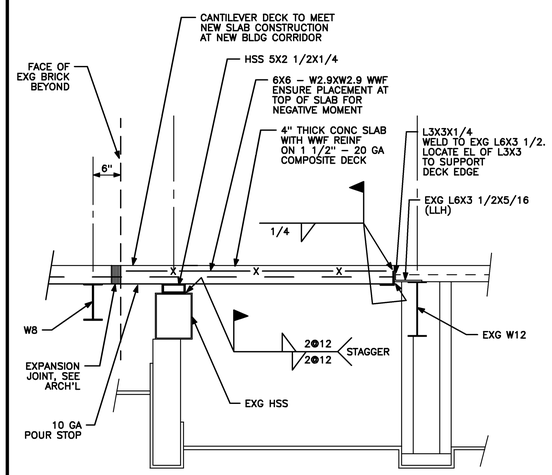

SECTION AT CONN TO EXG BLDG — B1

3/4" = 1'-0" | 0 1/2' 1' 2' | REF: NA

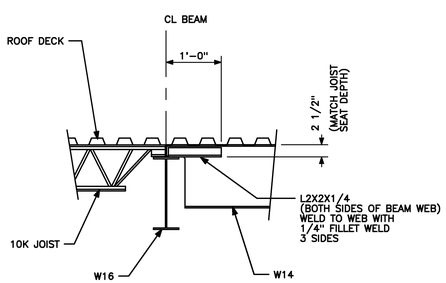

SECTION AT ROOF FRAMING — A4

3/4" = 1'-0" | 0 1/2' 1' 2' | REF: S30.1

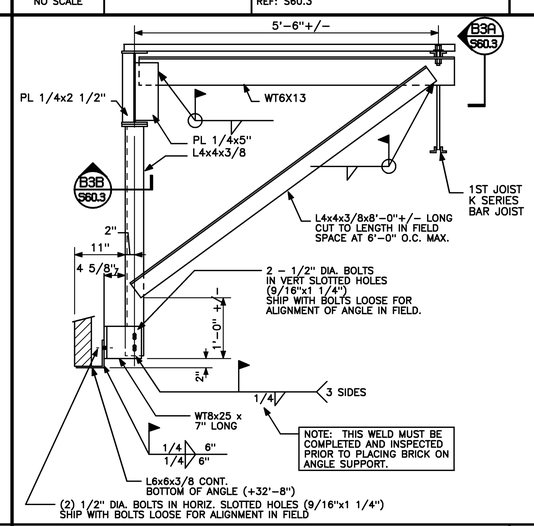

SECTION – TYPE B HANGER — A3

3/4" = 1'-0" | 0 1/2' 1' 2' | REF: S30.1

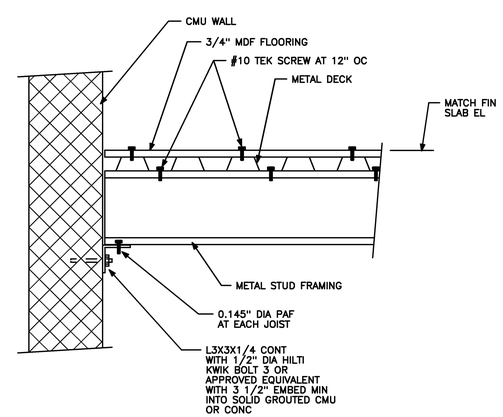

SECTION AT ELEVATOR SHAFT FLOOR — A2

1 1/2" = 1'-0" | 0 4" 8" 1' | REF: S10.1, S20.1, S20.2

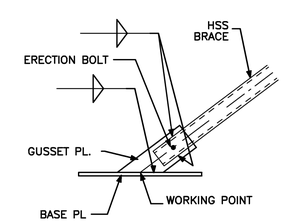

BRACE DETAIL — A1

NOT TO SCALE | REF: S40.1

Architects + Engineers

HARRIMAN ASSOCIATES

One Auburn Business Park
Auburn, Maine 04210

207.784.5100 tel
207.782.3017 fax
www.harriman.com

Building communities
since 1870

© 2006

Project Title

WOODARD & CURRAN OFFICE ADDITION

PORTLAND, MAINE

HA Project No. 05178

Key Plan

Mark	Date	Description
–	05-15-06	ISSUED FOR CONSTRUCTION
–	03-14-06	FINAL REVIEW

Issue Dates

Drawing Status

Drawing Title

STRUCTURAL DETAILS

PA / PE: JCF | Drawn By: SJF

Drawing Number

S60.3