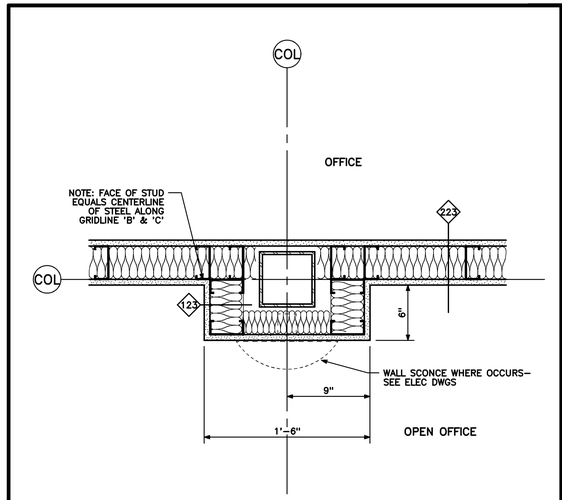

INTERIOR PLAN DETAIL — 1 1/2" = 1'-0" — REF: A10.2 — **C4**

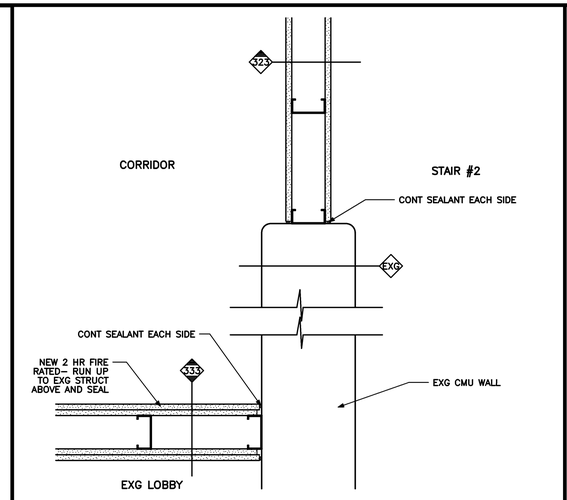

INTERIOR PLAN DETAIL — 1 1/2" = 1'-0" — REF: B1/A11.1 — **C3**

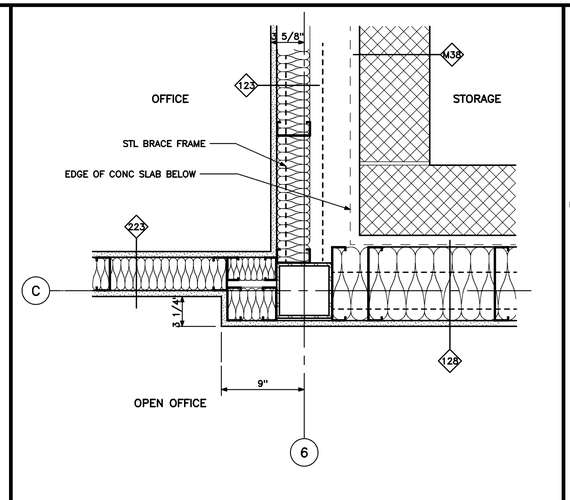

INTERIOR PLAN DETAIL — 1 1/2" = 1'-0" — REF: A1/A11.1 — **C2**

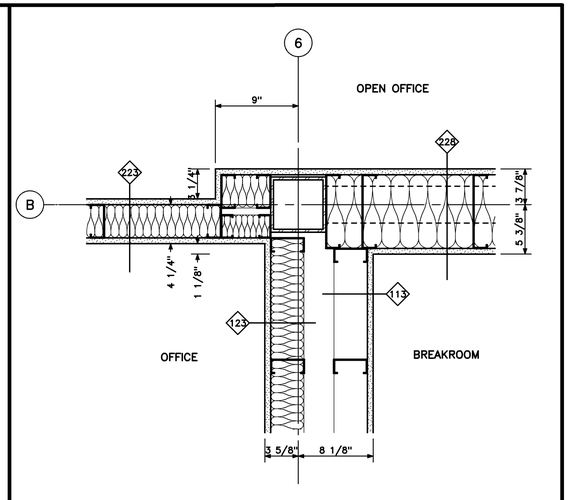

EXTERIOR PLAN DETAIL — 1 1/2" = 1'-0" — REF: A1/A11.1 — **C1**

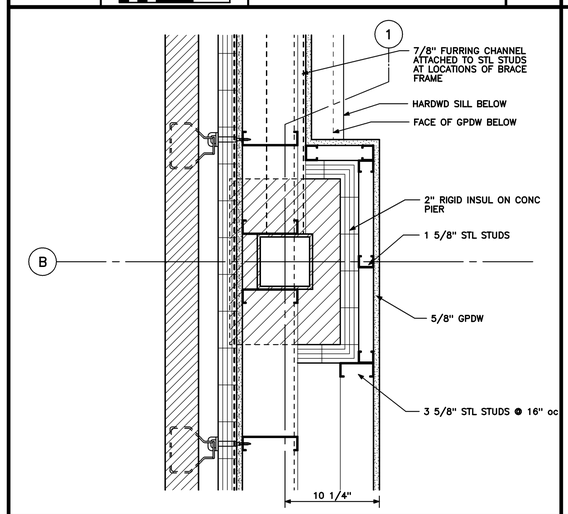

EXTERIOR PLAN DETAIL — 1 1/2" = 1'-0" — REF: A1/A10.1 — **B4**

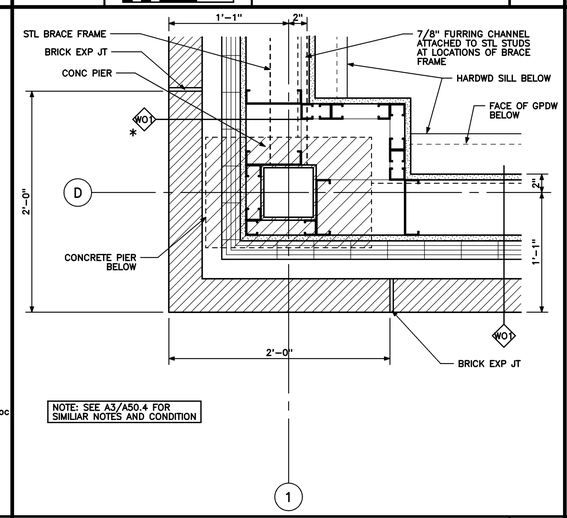

INTERIOR PLAN DETAIL — 1 1/2" = 1'-0" — REF: A1/A10.1 — **B3**

NOT USED — 1 1/2" = 1'-0" — REF: NA — **B2**

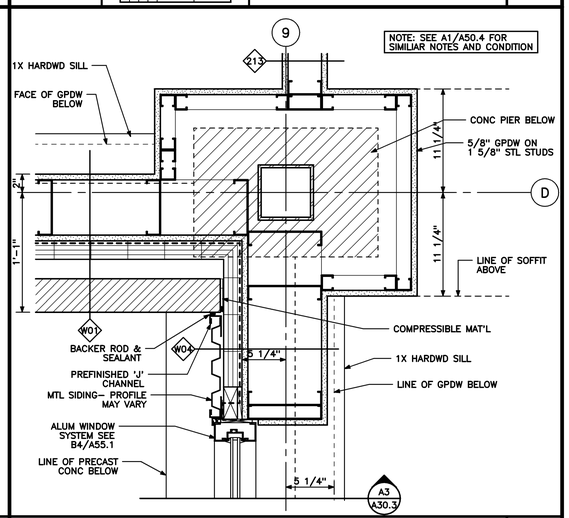

EXTERIOR PLAN DETAIL — 1 1/2" = 1'-0" — REF: B1/A11.1 — **B1**

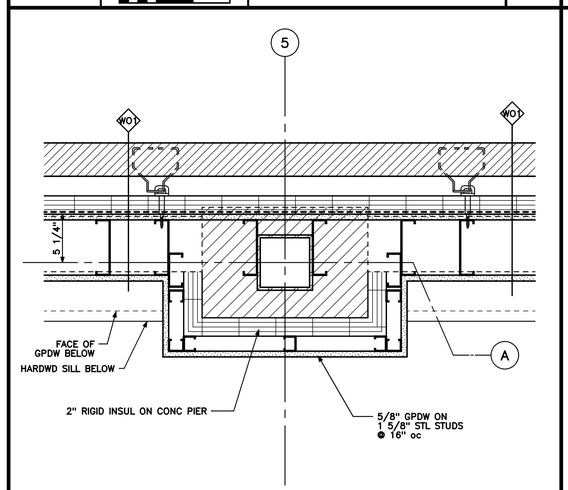

EXTERIOR PLAN DETAIL — 1 1/2" = 1'-0" — REF: A1/A10.1 — **A4**

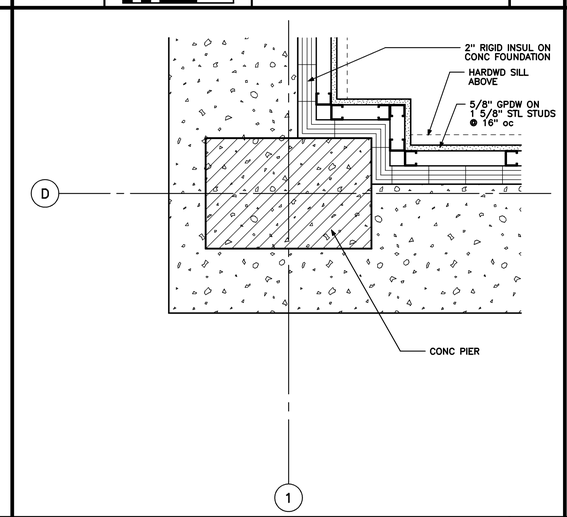

INTERIOR PLAN DETAIL — 1 1/2" = 1'-0" — REF: B3/A50.4 — **A3**

NOT USED — 1 1/2" = 1'-0" — REF: NA — **A2**

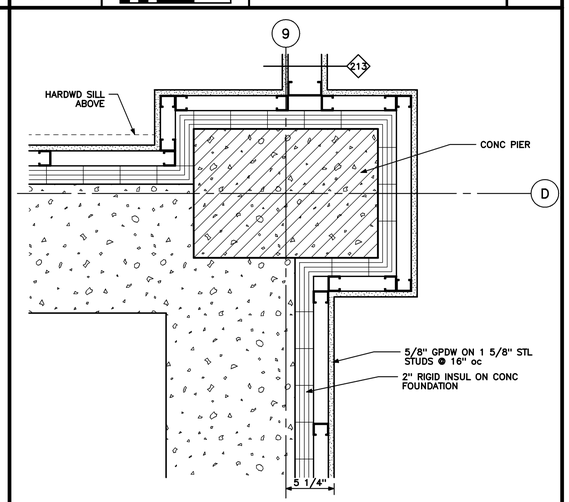

EXTERIOR PLAN DETAIL — 1 1/2" = 1'-0" — REF: B1/A50.4 — **A1**

Architects + Engineers

HARRIMAN ASSOCIATES

One Auburn Business Park
Auburn, Maine 04210

207.784.5100 tel
207.782.3017 fax
www.harriman.com

Building communities since 1870

© 2006

Project Title

WOODARD & CURRAN OFFICE ADDITION

PORTLAND, MAINE

HA Project No. 05178

Key Plan

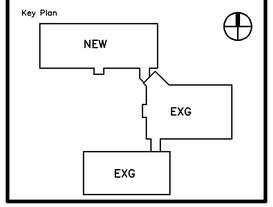

Mark	Date	Description
–	05–15–06	ISSUED FOR CONSTRUCTION
–	03–14–06	FINAL REVIEW

Issue Dates

Drawing Status

Drawing Title

DETAILS

PA / PE: JMB — Drawn By: MCM

Drawing Number

A50.4