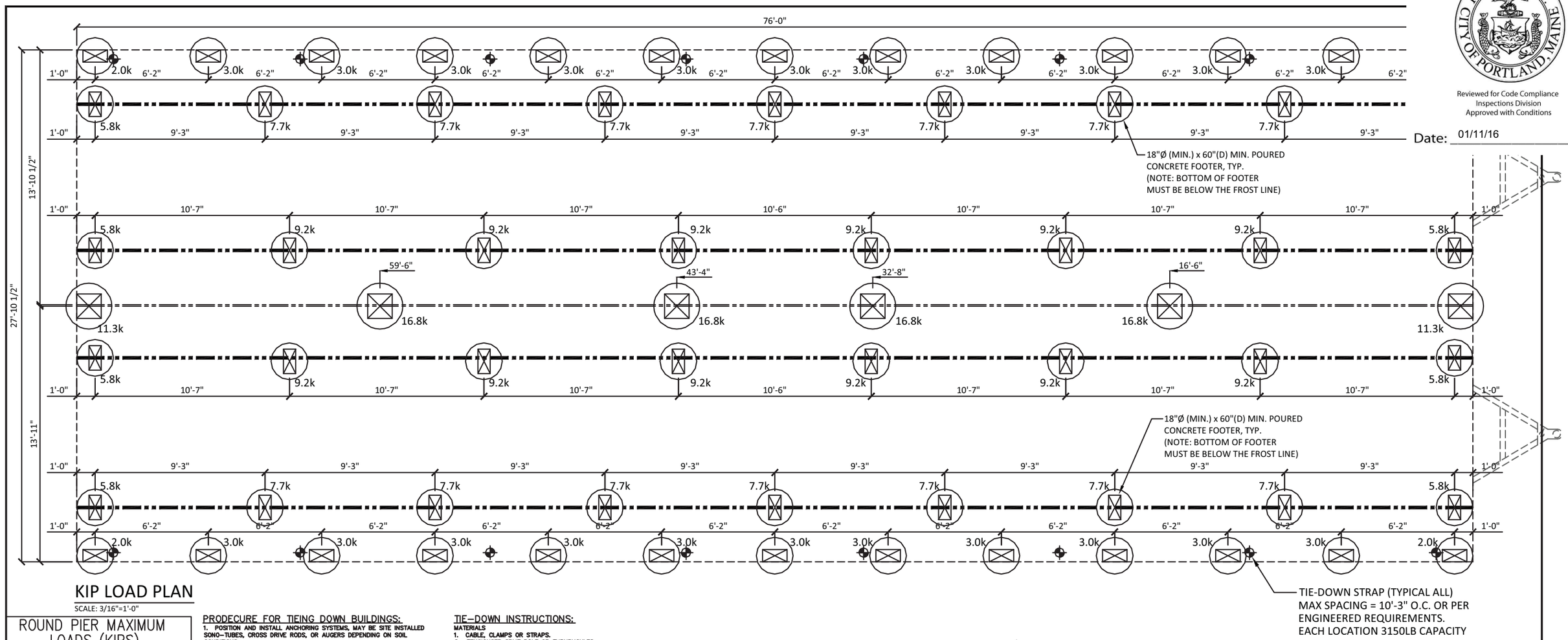

KIP LOAD PLAN

SCALE: 3/16"=1'-0"

Reviewed for Code Compliance
Inspections Division
Approved with Conditions

Date: 01/11/16

ROUND PIER MAXIMUM LOADS (KIPS)	
MINIMUM PIER DIMENSIONS (IN)	ALLOWABLE SOIL BEARING CAPACITY 2000PSF
18	3.5
20	4.4
22	5.3
24	6.3
26	7.4
28	8.6
30	9.8
32	11.1
34	12.6
36	14.1
44	21.1
48	25.1

PRODECURE FOR TIEING DOWN BUILDINGS:

1. POSITION AND INSTALL ANCHORING SYSTEMS, MAY BE SITE INSTALLED SONO-TUBES, CROSS DRIVE RODS, OR AUGERS DEPENDING ON SOIL CONDITIONS.
2. INSTALL STRAP, CABLE, TENSIONERS AND CLAMPS PER DETAIL.
3. FOLLOW SPACING DETAILS PER ATTACHED.
4. POSITION AND INSTALL STRAP OR CABLE WITH ANGLE APPROXIMATELY 45 DEGREES, EXCEPT ALTERNATE #3 CABLE IS PERPENDICULAR TO CONCRETE.

GENERAL NOTES:

1. ALL FOUNDATION CONSTRUCTION, MATERIALS AND INSTALLATION SHALL BE IN ACCORDANCE WITH ALL APPLICABLE STATE AND LOCAL CODES. THE PIER LOCATIONS PROVIDED ON THIS PLAN ARE FOR THE SOLE PURPOSE OF IDENTIFYING THE LOCATION OF THE REQUIRED BLOCKING POINTS FOR THIS BUILDING. FOUNDATION REQUIREMENTS ARE NOT KNOWN DUE TO VARYING SOIL CONDITIONS. FOUNDATION REVIEW AND INSPECTION IS TO BE PERFORMED BY THE LOCAL OFFICIAL HAVING JURISDICTION.
1. MINIMUM CONCRETE FOOTING DEPTH OF BELOW FROST LINE AND PER LOCAL CONDITIONS – 3,000 PSI @ 28 DAYS.
2. SINGLE STACK CONCRETE BLOCK FOR PIERS UP TO 32" IN HEIGHT WITH TYPE M OR S MORTAR. DOUBLE STACK CONCRETE BLOCK FOR PIERS BETWEEN 32" & 72" WITH TYPE M OR S MORTAR.
3. CORNER PIERS OVER 24" HIGH (THREE BLOCKS) SHALL BE DOUBLE BLOCK CONSTRUCTION WITH TYPE M OR S MORTAR.
4. TIE-DOWN STRAPS TO BE 1-1/4" X .035" TYPE-1, FINISH B, GRADE 1 ZINC COATED STEEL STRAPPING CONFORMING WITH ASTM d3953-91. TIE DOWN STRAPS AND CONNECTING HARDWARE SHALL HAVE A MINIMUM WORKING CAPACITY OF 3,150 LBS.
5. GROUND ANCHORS SHALL HAVE A 3,150# MINIMUM WORKING CAPACITY AND SHALL BE INSTALLED IN ACCORDANCE WITH THE MANUFACTURER'S SPECIFICATIONS.
6. THE MINIMUM NET AREA OF VENTILATION OPENINGS SHALL NOT BE LESS THAN 150. FT IN 150 SQ. FT OF CRAWL-SPACE AREA.
7. MINIMUM CRAWL SPACE ACCESS AREA TO BE 18" X 24"
8. MINIMUM SOIL BEARING CAPACITY IS 2,000 PSF. TO BE VERIFIED BY BUILDING'S OWNER.

TIE-DOWN INSTRUCTIONS:

MATERIALS
1. CABLE, CLAMPS OR STRAPS.
2. TENSIONSER SPLIT BOLT OR TURNBUCKLES.
3. ANCHORS, EYEBOLTS, CROSS DRIVE RODS
4. STABILIZERS DISC DRIVE OR ZIP CAPS.

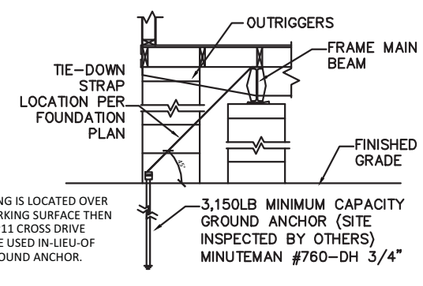

NOTE: IF BUILDING IS LOCATED OVER AN ASPHALT PARKING SURFACE THEN A #HP10 OR #HP11 CROSS DRIVE ANCHOR MAY BE USED IN-LIEU-OF AUGER TYPE GROUND ANCHOR.

SCREW TYPE ANCHORING DETAIL
(AT HURRICANE STRAP LOCATIONS)
Scale: NTS

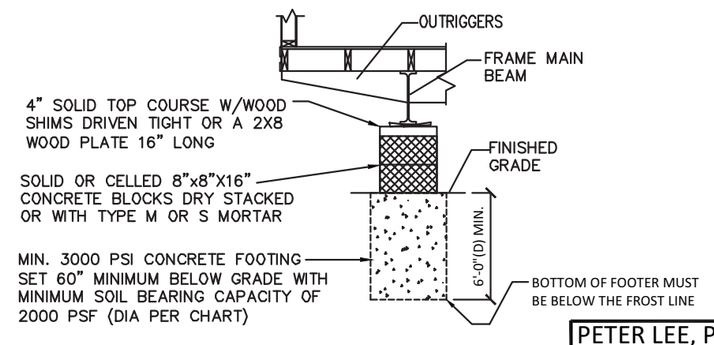

TYPICAL OUTRIGGER BLOCKING DETAIL

PETER LEE, P.E. M.S.
ENGINEERING INTERNATIONAL, INC.
ENGINEER: PETER LEE, P.E., M.S.
CONSULTING ENGINEER
23329 CENTURY DRIVE
ELKHART, IN 46514

STATE OF MAINE
PIN-SHI PETER LEE
No.12156
LICENSED
PROFESSIONAL ENGINEER

Nov. 11, 2015

SCHIAVI
Smarter Modular Solutions

SCHIAVI LEASING
JENNIFER CURRIER
103 AIRPORT ROAD
OXFORD, ME 04270
PH: (207) 539-8211
FAX:
WWW.VANGUARDMODULAR.COM

FOUNDATION PLAN - CONCRETE

SERIAL #: 351-B
OCCUP: E
DRAWING #: VGM-2015-0028

This document and all information contained herein, are the proprietary data and trade secrets of Vanguard Modular Building Systems (VMBS), and Schiavi Leasing Corporation (Schiavi). This document and the information contained herein may not be reproduced, used, or disclosed in any manner, or to any extent. Written authorization by a current employee of VMBS or Schiavi must be obtained prior to use of this information, in any form, including that which is represented by this complete page.

Drawing Date: 11-10-2015	Project: PORTLAND, ME
Drawn By: J.L.B.	Sheet: FD1-C
Scale: 3/16"=1'-0"	1 of 1