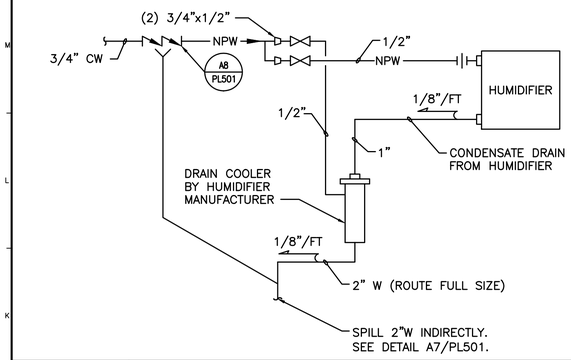

A1 HUMIDIFIER CONNECTION DETAIL

NOT TO SCALE

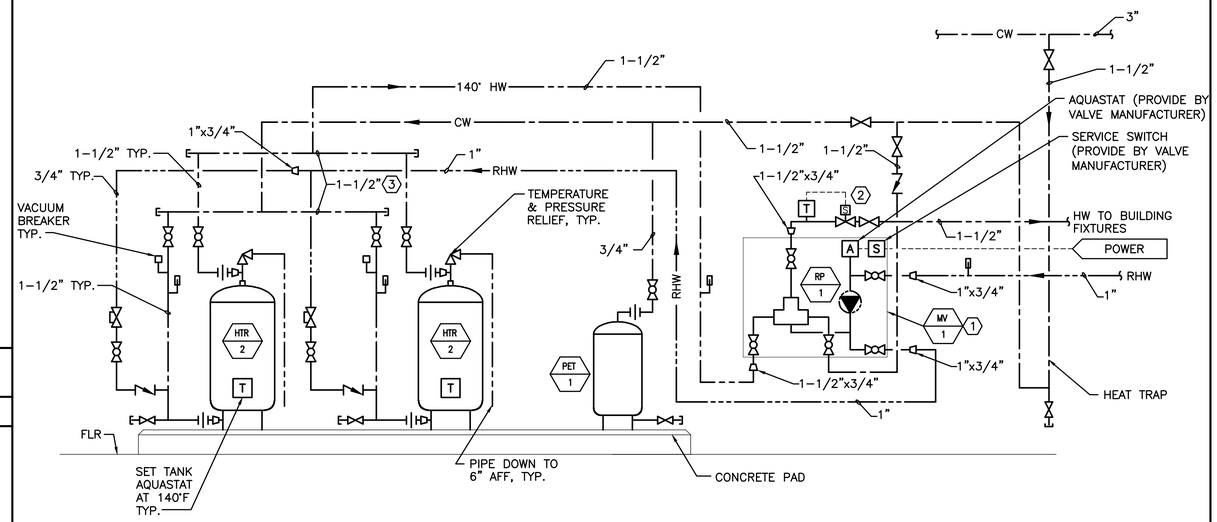

H6 DOMESTIC WATER PIPING

NOT TO SCALE

NOTE:

1. SEE SHEET M-001 FOR LEGEND AND ABBREVIATIONS.

KEYED NOTE:

1. PIPE MIXING VALVE CONTROL STATION IN ACCORDANCE WITH MANUFACTURER'S WRITTEN INSTRUCTIONS.
2. PROVIDE NORMALLY OPEN SOLENOID VALVE, 5 PSI PRESSURE DROP @ 100 GPM W/ SENSOR TO CLOSE VALVE WHEN SUPPLY WATER TEMPERATURE EXCEEDS 120°F, ADJUSTABLE.
3. MANIFOLDING SHALL BE OF EQUAL LENGTH TO EACH WATER HEATER. INSTALL USING TWO UNIT MANIFOLD KIT, SEE PL-601.

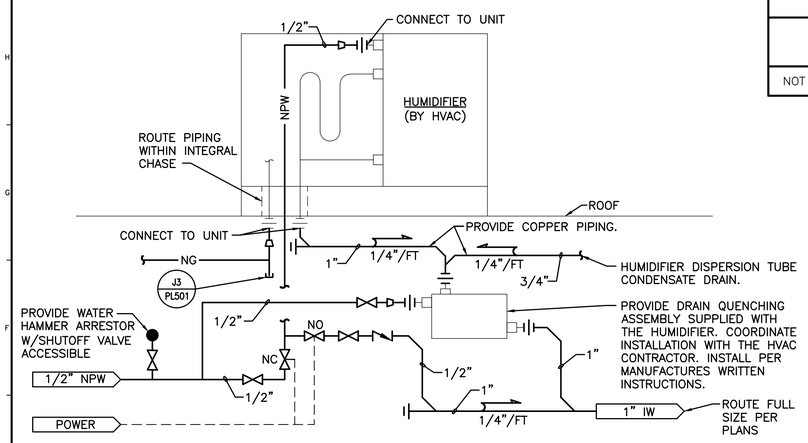

E1 PIPING AT HUMIDIFIER

NOT TO SCALE

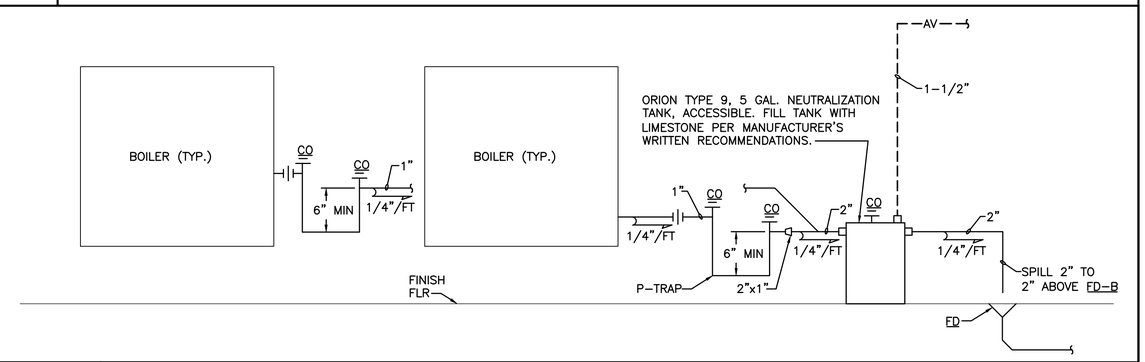

E6 BOILER CONDENSATE DRAIN DETAIL

NOT TO SCALE

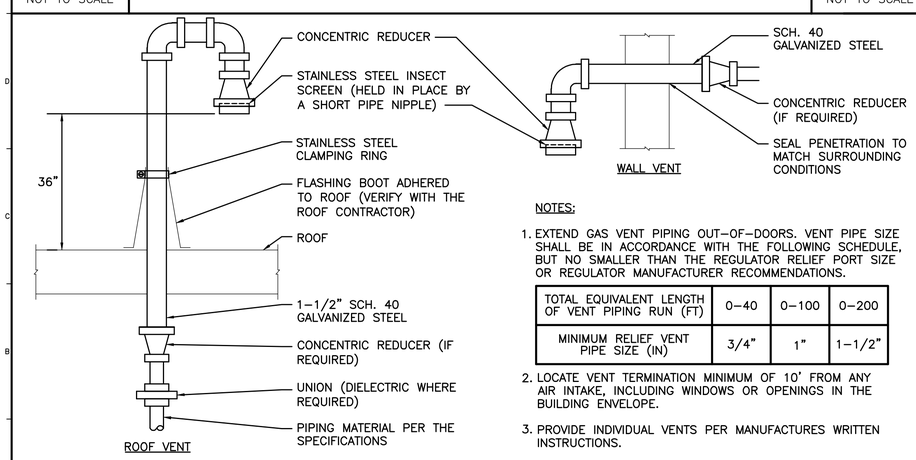

NOTES:

1. EXTEND GAS VENT PIPING OUT-OF-DOORS. VENT PIPE SIZE SHALL BE IN ACCORDANCE WITH THE FOLLOWING SCHEDULE, BUT NO SMALLER THAN THE REGULATOR RELIEF PORT SIZE OR REGULATOR MANUFACTURER RECOMMENDATIONS.

TOTAL EQUIVALENT LENGTH OF VENT PIPING RUN (FT)	0–40	0–100	0–200
MINIMUM RELIEF VENT PIPE SIZE (IN)	3/4"	1"	1-1/2"

2. LOCATE VENT TERMINATION MINIMUM OF 10' FROM ANY AIR INTAKE, INCLUDING WINDOWS OR OPENINGS IN THE BUILDING ENVELOPE.
3. PROVIDE INDIVIDUAL VENTS PER MANUFACTURES WRITTEN INSTRUCTIONS.

A1 NATURAL GAS VENT THROUGH ROOF (GVTR)

NOT TO SCALE

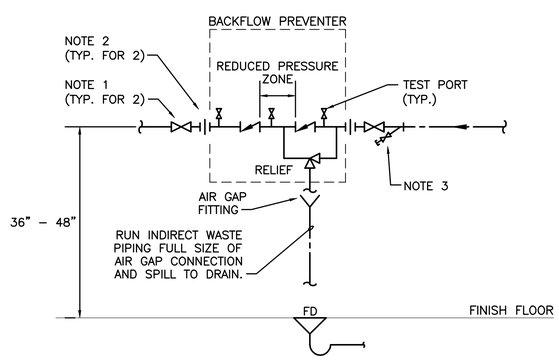

NOTES:

1. SHUT-OFF VALVE PROVIDED WITH DEVICE, BALL OR GATE STYLE.
2. FOR NON-FLANGED DEVICES, DISASSEMBLE AND INSTALL UNIONS WHERE SHOWN.
3. PROVIDE 3/4" BALL VALVE AND MALE HOSE THREAD END FOR STRAINERS 2-1/2" AND LARGER.
4. PROVIDE A MINIMUM CLEARANCE OF 12" BEHIND DEVICE. PROVIDE 36" CLEAR FLOOR SPACE IN FRONT OF DEVICE, FOR ACCESS AND TESTING.
5. SUPPORT DEVICE IN ACCORDANCE WITH MANUFACTURER'S WRITTEN INSTRUCTIONS. SUPPORTS SHALL IN NO MANNER INTERFERE WITH THE OPERATION, TESTING AND SERVICING OF THE DEVICE, INCLUDING THE RELIEF VALVE AND DRAIN. AT A MINIMUM, SUPPORTS SHALL CONSIST OF:
   - (2) FLOOR SUPPORTED PIPE STANDS OR WALL MOUNT STRUT WITH ANGLE BRACES FOR DEVICES 2-1/2" AND LARGER.
   - (2) SPLIT RING TYPE, WALL MOUNT PIPE CLAMP ASSEMBLIES FOR DEVICES 2" AND SMALLER.

A7 REDUCED PRESSURE ZONE BACKFLOW PREVENTER

NOT TO SCALE

SMRT

ARCHITECTURE ENGINEERING PLANNING
SMRT
144 Fore Street/P.O. Box 618
Portland, Maine 04104
tel. (207) 772-3846
fax. (207) 772-1070

PROJECT TITLE: MAINE TURNPIKE AUTHORITY ADMINISTRATION BUILDING PORTLAND, MAINE

CURRENT ISSUE STATUS: ISSUED FOR BIDDING/CONSTRUCTION 7-9-07

REV	DESCRIPTION	DATE
0	BIDDING/CONSTRUCTION	7-9-07

GRAPHIC SCALE: 0" 1"

SCALE:	NOT TO SCALE
PROJECT MANAGER:	SLB
JC/DRAWN BY:	TCM/BGG
A/E OF RECORD:	RMW
CAD FILE:	PL502-06016
PROJECT NO:	06016
DATE:	7-9-07

SHEET TITLE: DETAILS

SHEET No. PL502

© COPYRIGHT 2007 SMRT INC.