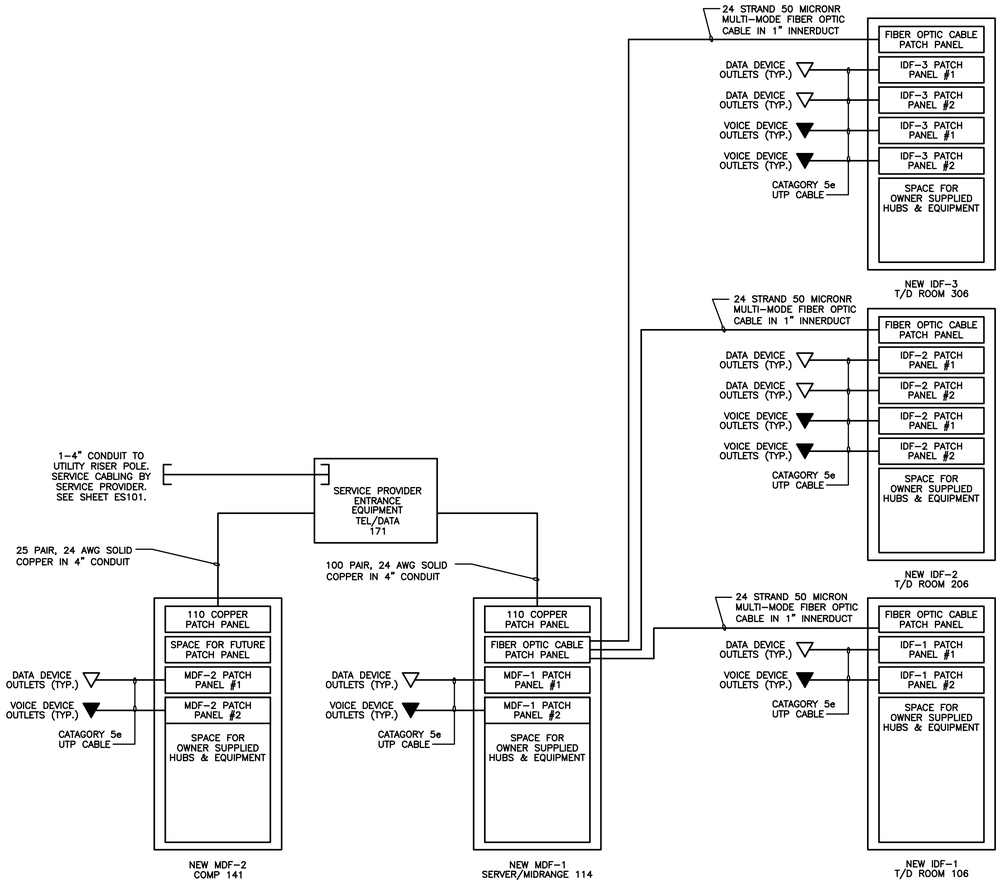

F1	TEL/DATA INFRASTRUCTURE RISER DIAGRAM
NONE	

NOTE:
EACH TV OUTLET RG-6 WIRING TO HAVE DEDICATED HOMERUN TO CLOSET BACKBOARD ON THAT FLOOR. PROVIDE ALL SPLITTERS AND REQUIRED EQUIPMENT ON CATV BACKBOARD. RG-11 RUNS TO TEL/DATA 171 SHALL BE TESTED AND LEFT WITH 10' EXCESS CABLE COILED FOR TERMINATION BY SERVICE PROVIDER.

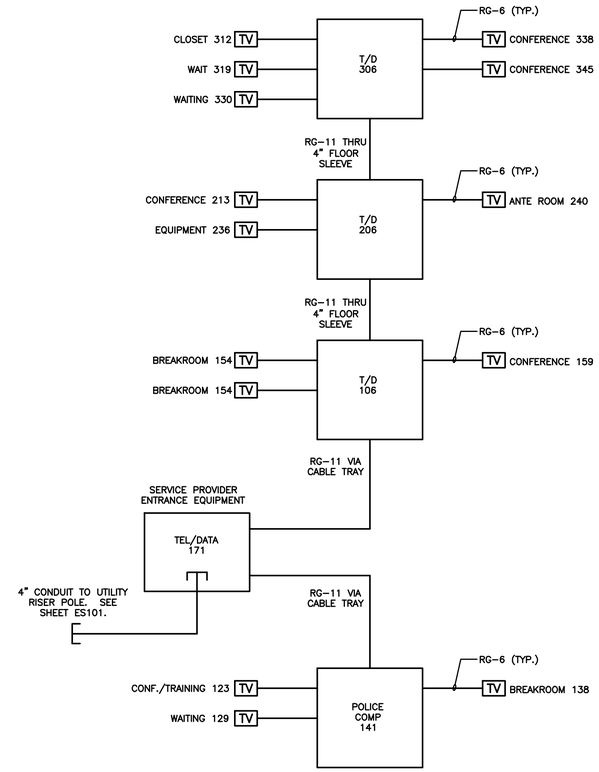

F9	CATV RISER DIAGRAM
NOT TO SCALE	

NOTES:

1. SEE SHEET E-001 FOR LEGEND AND GENERAL NOTES.

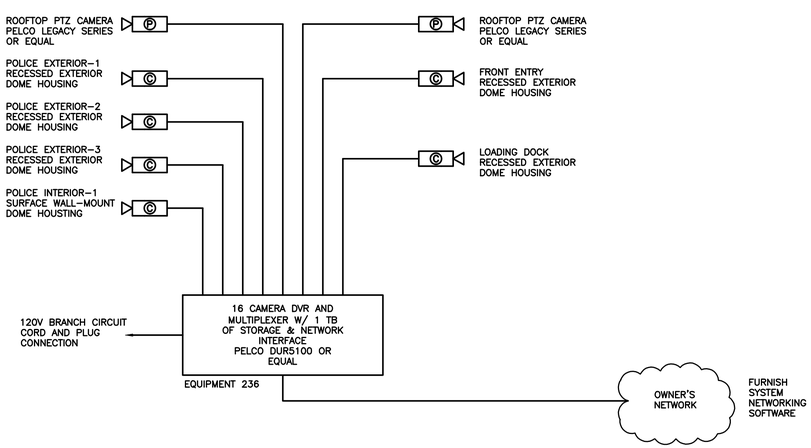

NOTE: CONTACTOR SHALL PROVIDE ALL SOFTWARE, CAMERAS, ENCLOSURES, MOUNTING HARDWARE, POWER SUPPLIES, AND ASSOCIATED VIDEO AND CONTROL WIRING FOR A COMPLETE AND OPERABLE SYSTEM. EXTERIOR CAMERAS SHALL BE DAY/NIGHT TYPE W/ UTP OUTPUT AND HEATED ENCLOSURES. INTERIOR CAMERAS SHALL BE GENERAL PURPOSE TYPE W/ UTP OUTPUT. SYSTEM INSTALLATION SHALL BE BY FACTORY AUTHORIZED INSTALLER AND INCLUDE ALL PROGRAMMING AND INTITIAL SYSTEM SETUP.

A1	CCTV RISER DIAGRAM
NONE	

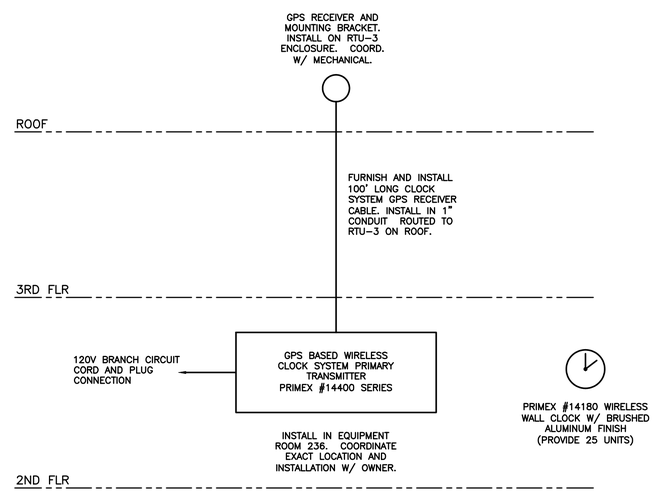

A7	WIRELESS CLOCK SYTEM RISER DIAGRAM
NONE	

SMRT
ARCHITECTURE ENGINEERING PLANNING
SMRT
144 Fore Street/P.O. Box 618
Portland, Maine 04104
tel. (207) 772-3846
fax. (207) 772-1070

PROJECT TITLE:
MAINE TURNPIKE AUTHORITY ADMINISTRATION BUILDING
PORTLAND, MAINE

CURRENT ISSUE STATUS:
ISSUED FOR BIDDING/CONSTRUCTION
7-9-07

REV	DESCRIPTION	DATE
0	BIDDING/CONSTRUCTION	7-9-07

GRAPHIC SCALE: 0" 1"

SCALE:	AS NOTED
PROJECT MANAGER:	SLB
JC/DRAWN BY:	TCM/CDS
A/E OF RECORD:	JPP
CAD FILE:	EY652-06016
PROJECT NO:	06016
DATE:	7-9-07

SHEET TITLE:
SYSTEMS RISER DIAGRAMS

SHEET No.
EY652

© COPYRIGHT 2007 SMRT INC.