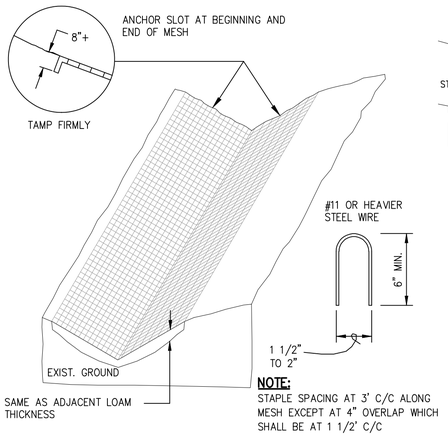

NOTE:
STAPLE SPACING AT 3' C/C ALONG MESH EXCEPT AT 4" OVERLAP WHICH SHALL BE AT 1 1/2' C/C

WIRE STAPLE

NOTE:
LOCATE STAPLES AT EDGES, AT QUARTER POINTS, & AT 4" OVERLAP.

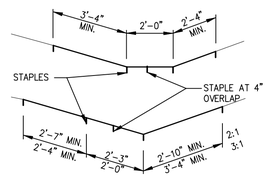

ANGULAR DITCHES

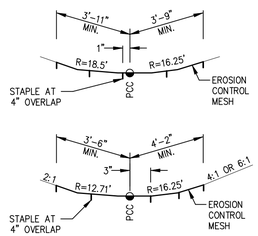

CIRCULAR DITCHES

F1 EROSION CONTROL MESH DETAIL

NTS *

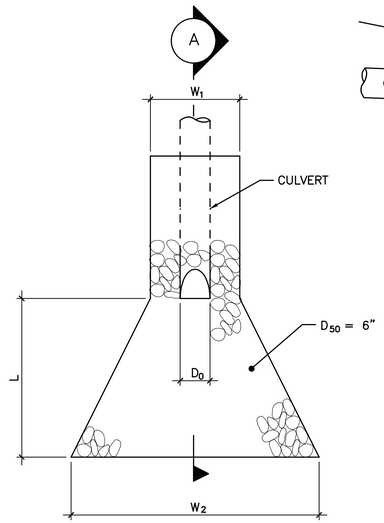

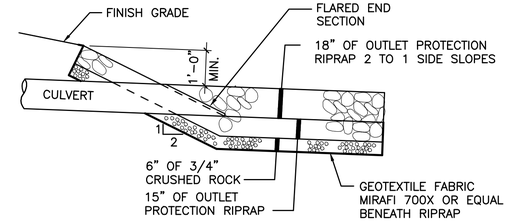

SECTION A

APRON SIZING SCHEDULE

DIAMETER, D_0	WIDTH AT CULVERT, W_1	WIDTH AT END, W_2	LENGTH, L
10"	4.0 FEET	6.0 FEET	6.0 FEET
12"	4.0 FEET	6.0 FEET	6.0 FEET
TWIN 18"	12.0 FEET	12.0 FEET	25.0 FEET
TWIN 24"	12.0 FEET	12.0 FEET	25.0 FEET
36"	6.0 FEET	12.0 FEET	25.0 FEET

F6 RIPRAP OUTLET APRON DETAIL

NTS *

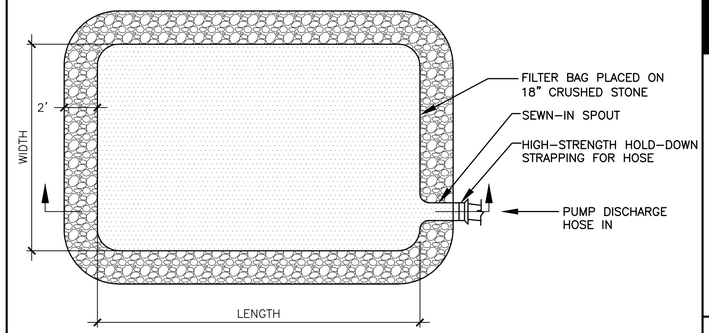

PLAN

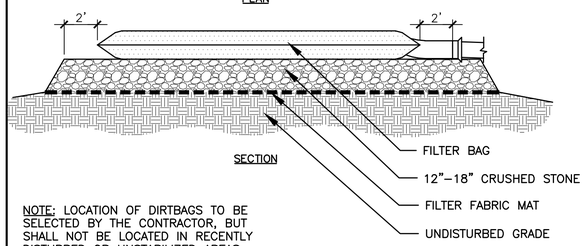

SECTION

NOTE: LOCATION OF DIRTBAGS TO BE SELECTED BY THE CONTRACTOR, BUT SHALL NOT BE LOCATED IN RECENTLY DISTURBED OR UNSTABILIZED AREAS.

F11 DIRT BAG

NTS *

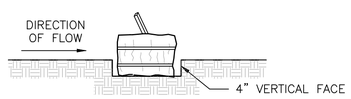

EMBEDDING DETAIL

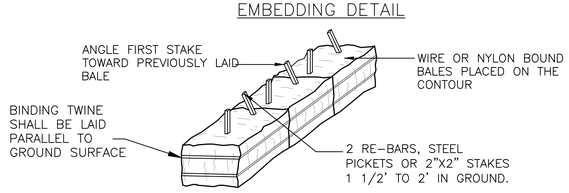

ANCHORING DETAIL

CONSTRUCTION SPECIFICATIONS

1. BALES SHALL BE PLACED IN A ROW WITH ENDS TIGHTLY ABUTTING THE ADJACENT BALES.
2. EACH BALE SHALL BE EMBEDDED IN THE SOIL A MINIMUM OF 4".
3. BALES SHALL BE SECURELY ANCHORED IN PLACE BY STAKES OR RE-BARS DRIVEN THROUGH THE BALES. THE FIRST STAKE IN EACH BALE SHALL BE ANGLED TOWARD PREVIOUSLY LAID BALE TO
4. FORCE BALES TOGETHER.
   INSPECTION SHALL BE FREQUENT AND REPAIR OR REPLACEMENT SHALL BE MADE PROMPTLY
5. AS NEEDED.
   BALES SHALL BE REMOVED WHEN THEY HAVE SERVED THEIR USEFULNESS SO AS NOT TO BLOCK OR IMPEDE STORM FLOW OR DRAINAGE.

A1 STRAW OR HAY BALE BARRIER

NTS *

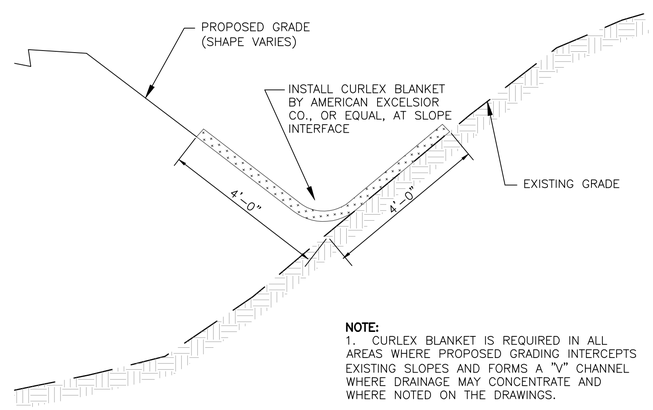

NOTE:
1. CURLEX BLANKET IS REQUIRED IN ALL AREAS WHERE PROPOSED GRADING INTERCEPTS EXISTING SLOPES AND FORMS A "V" CHANNEL WHERE DRAINAGE MAY CONCENTRATE AND WHERE NOTED ON THE DRAWINGS.

2. STAPLE SIZE AND DISTRIBUTION PER MANUFACTURERS SPECIFICATION.

A6 CURLEX BLANKET DETAIL

NTS *

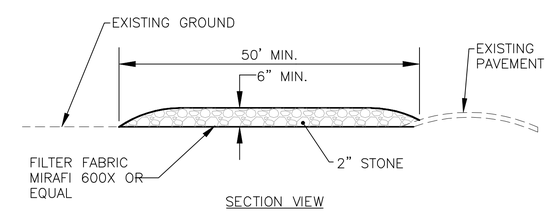

SECTION VIEW

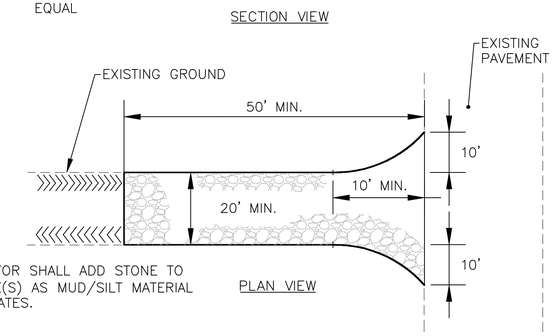

NOTE:
CONTRACTOR SHALL ADD STONE TO ENTRANCE(S) AS MUD/SILT MATERIAL ACCUMULATES.

PLAN VIEW

A11 STABILIZED CONSTRUCTION ENTRANCE

NTS *

SMRT

ARCHITECTURE ENGINEERING PLANNING

SMRT
144 Fore Street/P.O. Box 618
Portland, Maine 04104
tel. (207) 772-3846
fax. (207) 772-1070

PROJECT TITLE:
MAINE TURNPIKE AUTHORITY
ADMINISTRATION BUILDING
PORTLAND, MAINE

ISSUED FOR BIDDING/CONSTRUCTION
7-9-07

REV	DESCRIPTION	DATE

GRAPHIC SCALE: 0" 1"

SCALE:	SHOWN
PROJECT MANAGER:	SLB
JC/DRAWN BY:	TCM/PAF
A/E OF RECORD:	MGJ
CAD FILE:	06016-C505
PROJECT NO:	06016
DATE:	7-9-07

SHEET TITLE:
EROSION/SEDIMENT CONTROL DETAILS

SHEET No. CS502

© COPYRIGHT 2007 SMRT INC.