NOTE:

1. REFER TO SG001 FOR GENERAL NOTES.

2. TYPICAL FLOOR DECK: CONCRETE SLAB ON 0.6C26 GALV. FORM DECK REINF. WITH 6x6-W1.4xW1.4. TOTAL FLOOR DECK THICKNESS 2". T.O.C. SHALL MATCH T.O. EXIST. CONC. FLOOR. THE CONCRETE FLOOR DECK THICKNESS SHALL BE INCREASED AT MID-SPANS AS REQ. TO COMPENSATE FOR JOISTS/BEAMS DEFLECTION DURING CONCRETE POUR.

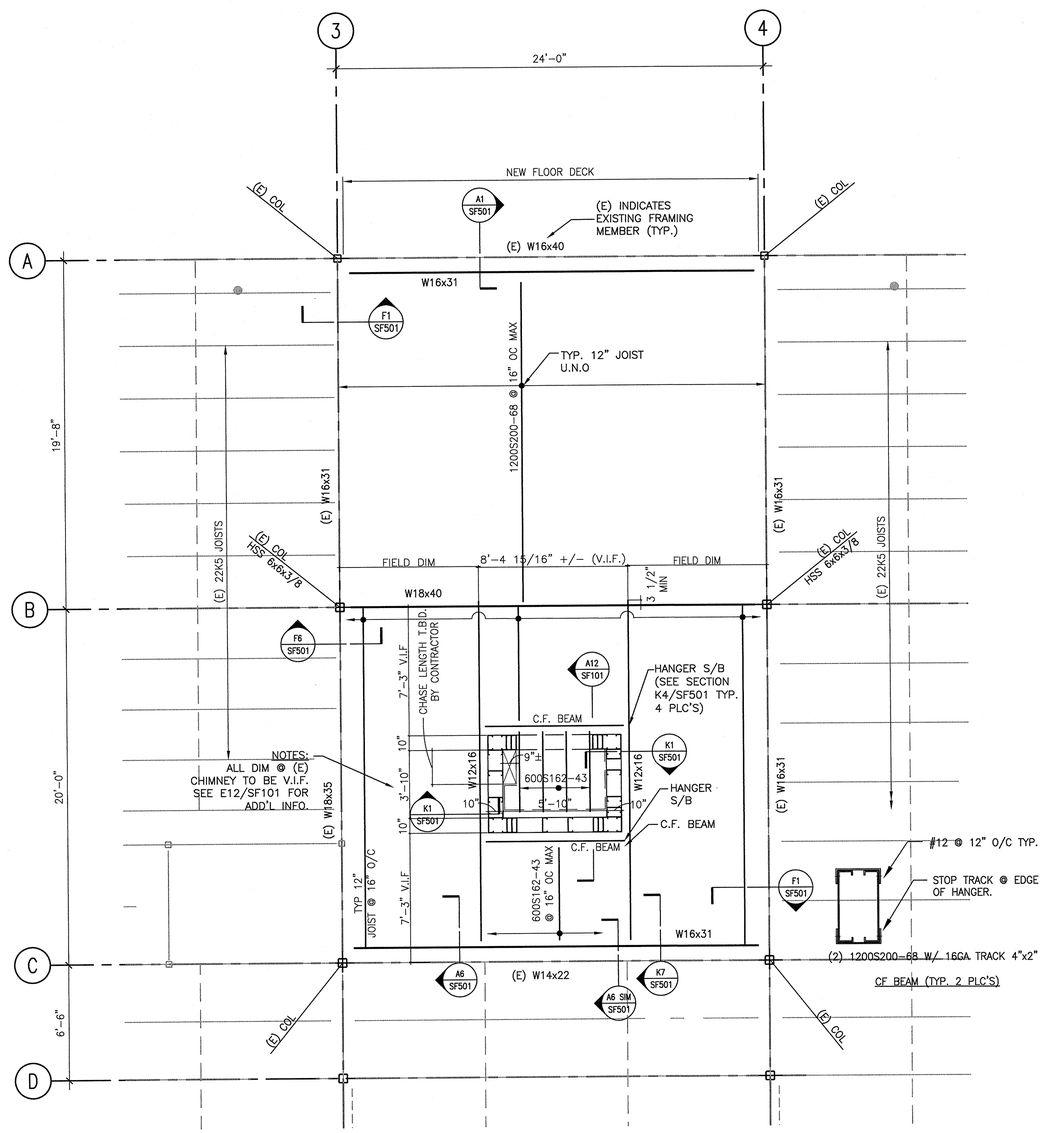

A1 PARTIAL SECOND FLOOR FRAMING PLAN

SCALE 1/4"=1'-0"

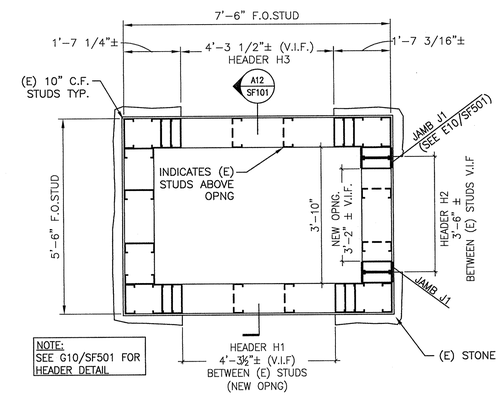

E12 (E) CHIMNEY PLAN - SECTION @ 1ST FLOOR LEVEL

SCALE 1/2"=1'-0"

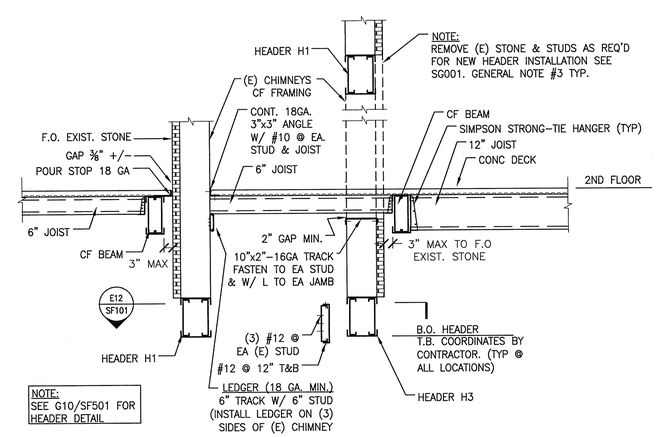

A12 SECTION THRU (E) CHIMNEY

SCALE 1/2"=1'-0"

144 Fore Street, PO Box 618
Portland, Maine 04104
tel. (207) 772-3846
fax. (207) 772-1070
www.smrtinc.com

ARCHITECTURE
ENGINEERING
PLANNING
INTERIORS
ENERGY

SMRT

STATE OF MAINE
JANUSZ S. WSZOLA
NO. 6804
LICENSED
PROFESSIONAL ENGINEER

PROJECT NORTH:

PROJECT NORTH

CIANCHETTE SCOUT SERVICE BUILDING RENOVATION
SOUTH PORTLAND, MAINE

ISSUED FOR CONSTRUCTION
11-25-14

CURRENT ISSUE STATUS:

REV	DESCRIPTION	DATE

GRAPHIC SCALE: 0" 1"

SCALE:	AS NOTED
PROJECT MANAGER:	JSW
JC/DRAWN BY:	SJF/ SJF
A/E OF RECORD:	JSW
PROJECT NO:	14179
SMRT FILE:	SF101-14179
DATE:	11/25/14

SHEET TITLE:
SECOND FLOOR FRAMING PLAN & DETAILS

SHEET No.
SF101

© COPYRIGHT 2014 SMRT INC

PROGRESS PRIN