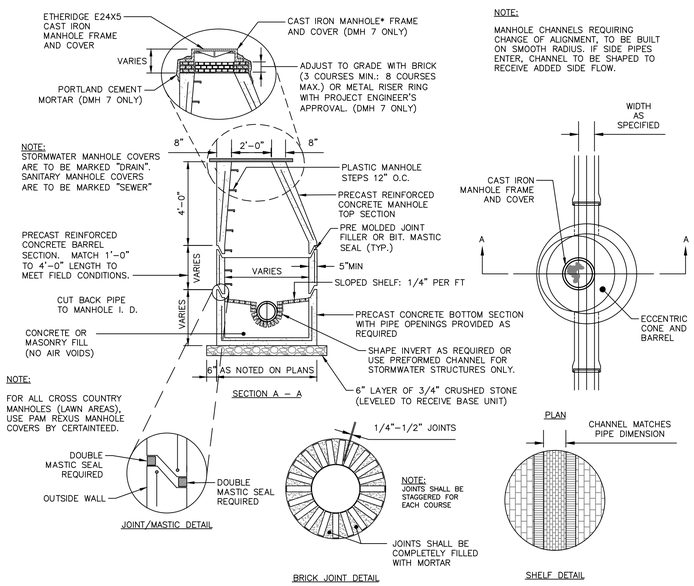

PRECAST CONCRETE MANHOLE

NOT TO SCALE

1. ALL CONCRETE SHALL HAVE A MINIMUM ULTIMATE COMPRESSIVE STRENGTH OF 4000 lbs. PER SQ. INCH AT THE END OF 28 DAYS, UNLESS OTHERWISE NOTED.
2. MANHOLES MAY BE CONSTRUCTED OF PRECAST REINFORCED CONCRETE, OR CAST IN PLACE.
3. PRECAST REINFORCED CONE BARREL MANUFACTURED PER ASTM SPEC. C–478.
4. ALL STORM AND SEWER MANHOLE COVERS SHALL BE SOLD AND SHALL HAVE ONE ⅞" DIAMETER DRILLED PICK HOLE LOCATED 8" FROM THE CENTER OF THE COVER.
5. ALL SANITARY MANHOLE COVERS SHALL HAVE "SEWER" CAST INTO THE COVER. ALL STORMWATER/DRAIN MANHOLE COVERS SHALL HAVE "DRAIN" CAST INTO THE COVER.
6. ALL MANHOLE RISERS SHALL BE ETHERIDGE 24" OR APPROVAL EQUAL.
7. SEWER BRICK SHALL CONFORM TO ASTM SPEC. DESIGNATE ON C–32–63, GRADE MA AND SA.
8. ALL SANITARY MANHOLES SHALL HAVE A WATERPROFFING COATING APPLIED TO THE EXTERIOR SURFACE.
9. CATCH BASIN FRAMES FOR TYPE A4 CATCH BASIN CURB INLETS SHALL BE ETHERIDGE DR5A OR APPROVED EQUAL.
10. CASTINGS SHALL CONFORM TO ASTM DESIGNATION A48–CLASS 35.
11. EXISTING MANHOLES, CATCH BASINS, FRAMES, AND COVERS SHALL BE SALVAGED BY THE CONTRACTOR, AND SHALL REMAIN THE PROPERTY OF THE CITY OF PORTLAND.
12. ALL CATCH BASIN OUTLETS SHALL BE INSTALLED WITH A CASCO TRAP PER DETAIL.

GENERAL NOTES FOR MANHOLES AND CATCH BASINS

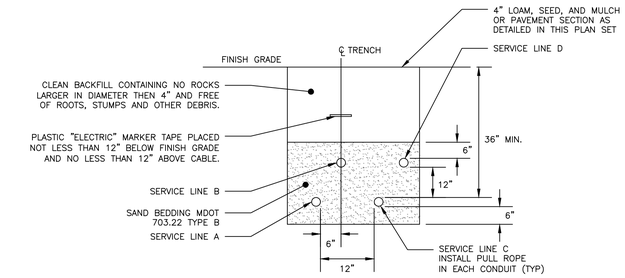

CONDUIT TYPE				
SERVICE	CONDUIT SIZE	GRASS AND PAVED AREAS	UTILITY	REMARKS
A	2–5"	SCHEDULE 40 PVC ELECTRICAL GRADE	PRIMARY POWER	SEE NOTE 1
B	2–4"	SCHEDULE 40 PVC	COMMUNICATION	–
C	2–4"	SCHEDULE 40 PVC ELECTRICAL GRADE	SPARE	IF REQUIRED
D	2–4"	SCHEDULE 40 PVC	CABLE	–

NOTES:

1. ONE CONDUIT CAPPED FOR SPARE, PROVIDE GALVANIZED STEEL LONG SWEEP AT RISER POLE AND EXTEND GALVANIZED CONDUIT TO 10" ABOVE GRADE AT POLE WITH STAND–OFF BRACKETS.
2. MINIMUM SEPARATION OF 24 INCHES BETWEEN PRIMARY CABLE/CONDUIT AND GAS LINES SHALL BE MAINTAINED.

UTILITY TRENCH – PRIMARY AND SECONDARY POWER, TELEPHONE, AND CABLE

NOT TO SCALE

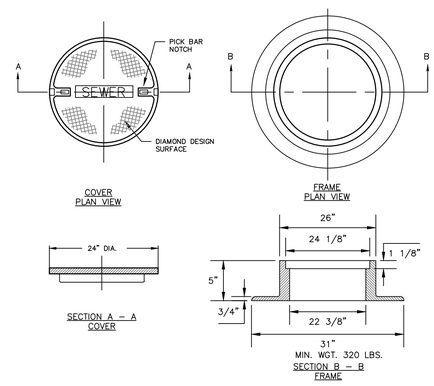

NOTES:

1. ALL SANITARY AND STORMWATER/DRAIN MANHOLE COVERS SHALL BE 24" x 5".
2. ALL SANITARY MANHOLE COVERS AND SHALL HAVE "SEWER" CAST INTO THE COVER.
3. ALL STORMWATER/DRAIN MANHOLE COVERS SHALL HAVE "DRAIN" CAST INTO THE COVER.
4. APPROVED MANHOLE FRAMES:
   4.1 EAST JORDAN = 1690Z
   4.2 OR APPROVED EQUAL
5. APPROVED MANHOLE COVERS
   5.1 EAST JORDAN = 2160A
   5.2 OR APPROVED EQUAL
6. FRAME AND COVER CONSTRUCTION SHALL BE COMPATIBLE WITH STANDARD PRECAST SEWER MANHOLE DETAIL

CAST IRON MANHOLE COVER AND FRAME

NOT TO SCALE

NOTES:

1. LOCATION WITH WARNING TAPE SHALL BE INSTALLED OVER CENTERLINE OF PIPE AT A MAXIMUM OF 24 INCHES BELOW FINISH GRADE.
2. SITE CONTRACTOR TO COORDINATE CONNECTION OF SEWER LATERAL TO HOUSEHOLD PLUMBING WITH ARCHITECTURAL CONTRACTOR
3. CONNECTION OF PROPOSED SEWER LATERAL TO HOUSEHOLD PLUMBING SHOULD INCORPORATE USE OF SIMILAR PIPE MATERIALS. IN THE CASE OF DISSIMILAR PIPES BEING USED, A FERNCO FLEXIBLE COUPLING SHALL BE USED.

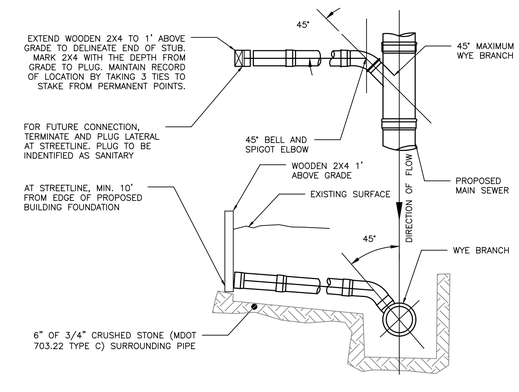

SEWER TEE/WYE CONNECTION DETAIL

NOT TO SCALE

DESIGN NOTES:

1. ANY ALTERNATE TRENCHING METHODS SHALL BE APPROVED IN ADVANCE BY THE CITY.
2. ALL CONSTRUCTION METHODS SHALL CONFORM TO THE CITY OF PORTLAND TECHNICAL STANDARDS FIGURE II–2.
3. BRACING & SHEETING OR OTHER TRENCH PROTECTION TO BE PROVIDED TO MEET APPLICABLE STATE AND O.S.H.A SAFETY STANDARDS. ALL SUCH TRENCH PROTECTION SHALL BE THE RESPONSIBILITY OF THE CONTRACTOR.
4. WHERE APPLICABLE, PERFORATIONS IN STORM DRAIN (PERF. SD) SHALL BE ORIENTED UP.
5. ALL STORM DRAINS SHALL BE PVC SDR 35 MIN PS–46 RATING OR OR IN ACCORDANCE WITH CITY OF PORTLAND TECHNICAL MANUAL , SECTION 2 – SANITARY SEWER AND STORM DRAIN – PART 2.5.2
6. IN PAVED AREAS, DEPTHS OF GRAVEL AND HOT MIX ASPHALT PAVEMENT SHALL MATCH THE GREATER OF EXISTING CONDITIONS OR THE REQUIREMENTS FOR THE CORRESPONDING STREET CLASSIFICATION.
7. THIS DETAIL SHALL BE APPLIED ONLY TO PIPE TRENCHES WITHIN OF THE CITY OF PORTLAND R.O.W.
8. STORM DRAIN COVER BETWEEN 2' AND 3' SHALL INCLUDE 4" OF RIGID INSULATION. COVER BETWEEN 3' AND 4' SHALL INCLUDE 2" RIGID INSULATION. OTHER UTILITIES: ADD 2" OF RIGID INSULATION FOR EACH FOOT ABOVE MINIMUM DEPTH.
9. DEPTH OF BITUMINOUS PAVEMENT AND AGGREGATE COURSES SHALL BE DETERMINED BY STREET CLASSIFICATION.
10. DIMENSION B SHALL BE SUFFICIENT TO ALLOW CRUSHED STONE BEDDING TO BE PLACED AND COMPACTED UNDER THE HAUNCHES OF THE PIPE; BUT IN ALL CASES DIMENSION B SHALL BE AT LEAST 9".
11. DIMENSION A IS THE MAXIMUM WIDTH ALLOWED FOR CALCULATING PAY QUANTITIES UNDER GRANULAR BORROW, CRUSHED STONE, STRUCTURAL EARTH EXCAVATION, AND STRUCTURAL ROCK EXCAVATION. DIMENSION A SHALL BE BASED ON PIPE DIAMETER D, AS SET FORTH IN THE TABLE BELOW.

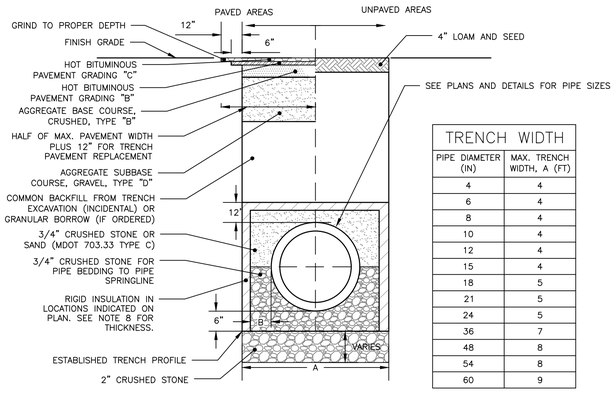

TRENCH WIDTH	
PIPE DIAMETER (IN)	MAX. TRENCH WIDTH, A (FT)
4	4
6	4
8	4
10	4
12	4
15	4
18	5
21	5
24	5
36	7
48	8
54	8
60	9

CITY OF PORTLAND TYPICAL PIPE TRENCH DETAIL

NOT TO SCALE

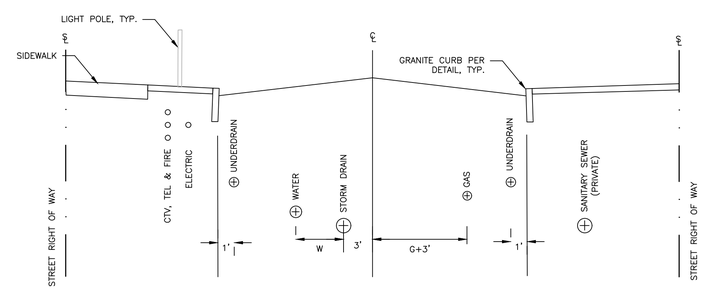

NOTES:

1. DEPTH OF SANITARY SEWER AND STORM DRAIN PER ROAD PROFILES.
2. DEPTH OF UNDERDRAIN SHALL BE 3'–6" FROM GUTTER LINE TO PIPE INVERT.
3. DEPTHS OF ELECTRIC, TELEPHONE, CABLE TELEVISION AND FIRE TO BE AT LEAST 36 INCHES BELOW FINISH GRADE. DEPTHS OF OTHER UTILITIES PER REQUIREMENTS OF APPLICABLE UTILITY COMPANY. WHEN TREES ARE PROPOSED FOR THE ESPLANADE, THE UTILITIES DESIGNATED FOR THAT LOCATION SHALL MAKE NECESSARY PROVISIONS.
4. APPLICABLE WARNING TAPE SHALL BE PLACES OVER EACH UTILITY.
5. RIGID PVC CONDUIT IS REQUIRED FOR STREET AND DRIVEWAY CROSSINGS AND OTHER PAVEMENT CROSSINGS MORE THAN 12 FEET IN LENGTH. CONDUITS CROSSING STREETS SHALL BE ENCASED IN CONCRETE.

STREET CLASSIFICATION	R.O.W. WIDTH (FT.)	UTILITY LOCATION DIMENSIONS	
		W (FT.)	G (FT.)
LOCAL	50	5	5
COLLECTOR	60	7	7
ARTERIAL	66	8	8

UTILITY LOCATIONS IN STREETS

NOT TO SCALE

PRELIMINARY
NOT ISSUED FOR
CONSTRUCTION

ISSUED FOR	BY	DATE
PRELIM. APP.	WHS	8/22/17

DRAWING NAME: UTILITY DETAILS – 1

PROJECT NAME: STROUDWATER PRESERVE

CLIENT: STROUDWATER DEVELOPMENT PARTNERS, LLC
KENNEBUNK, MAINE 04043

THIS PLAN SHALL NOT BE MODIFIED WITHOUT WRITTEN PERMISSION FROM ACORN ENGINEERING, INC. ANY MODIFICATIONS, WHETHER MINOR OR OTHERWISE, SHALL BE AT THE USER'S SOLE RISK AND WITHOUT LIABILITY TO ACORN ENGINEERING, INC.

ACORN ENGINEERING, INC.
ENGINEERING, INC.
158 DANFORTH STREET PORTLAND, MAINE 04102
(207) 775–2655

FILE:	1079_CIVIL
JN:	1079
SCALE:	NTS
DESIGNED BY:	WHS
DRAWN BY:	SJL
CHECKED BY:	WHS

STATE OF MAINE
WILLIAM H. SAVAGE
No. 5187
8-25-17
PROFESSIONAL ENGINEER

DRAWING NO.
C-53