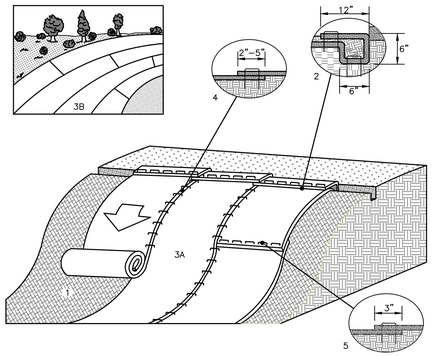

SLOPE
INSTALLATION DETAIL

1. PREPARE SOIL BEFORE INSTALLING ROLLED EROSION CONTROL PRODUCTS (ECB), INCLUDING ANY NECESSARY APPLICATION OF LIME, FERTILIZER, AND SEED.

2. BEGIN AT THE TOP OF THE SLOPE BY ANCHORING THE ECB IN A 6" DEEP X 6" WIDE TRENCH WITH APPROXIMATELY 12" OF ECB EXTENDED BEYOND THE UP–SLOPE PORTION OF THE TRENCH. ANCHOR THE ECB WITH A ROW OF STAPLES/STAKES APPROXIMATELY 12" APART IN THE BOTTOM OF THE TRENCH. BACKFILL AND COMPACT THE TRENCH AFTER STAPLING. APPLY SEED TO THE COMPACTED SOIL AND FOLD THE REMAINING 12" PORTION OF ECB BACK OVER THE SEED AND COMPACTED SOIL. SECURE ECB OVER COMPACTED SOIL WITH A ROW OF STAPLES/STAKES SPACED APPROXIMATELY 12" APART ACROSS THE WIDTH OF THE ECB.

3. ROLL THE ECB (A) DOWN OR (B) HORIZONTALLY ACROSS THE SLOPE. ECB WILL UNROLL WITH APPROPRIATE SIDE AGAINST THE SOIL SURFACE. ALL ECB MUST BE SECURELY FASTENED TO SOIL SURFACE BY PLACING STAPLES/STAKES IN APPROPRIATE LOCATIONS AS SHOWN IN THE STAPLE PATTERN GUIDE.

4. THE EDGES OF PARALLEL ECB MUST BE STAPLED WITH APPROXIMATELY 2" – 5" OVERLAP DEPENDING ON THE ECB TYPE.

5. CONSECUTIVE ECB SPLICED DOWN THE SLOPE MUST BE END OVER END (SHINGLE STYLE) WITH AN APPROXIMATE 3" OVERLAP. STAPLE THROUGH OVERLAPPED AREA, APPROXIMATELY 12" APART ACROSS ENTIRE ECB WIDTH.

*NOTE:
IN LOOSE SOIL CONDITIONS, THE USE OF STAPLE OR STAKE LENGTHS GREATER THAN 6" MAY BE NECESSARY TO PROPERLY SECURE THE ECB.

EROSION CONTROL BLANKET SLOPE INSTALLATION

NOT TO SCALE

NOTES:

1. CONTRACTOR SHALL ADD STONE TO ENTRANCE AS MUD/SILT MATERIAL ACCUMULATES
2. STONE SHALL BE 2"–3" COARSE AGGREGATE
3. CONSTRUCTION ENTRANCE SHALL BE GRADED TO NOT ALLOW ANY STORMWATER TO BE CONVEYED OFF SITE. IN SITUATIONS WHERE THIS IS NOT POSSIBLE, ANY STORMWATER CONVEYED OFFSITE SHALL BE TREATED OR RETAINED IN A MANNER APPROVED BY ENGINEER.
4. WHEN NECESSARY, ON–SITE VEHICLES SHALL HAVE THEIR WHEELS CLEANED PRIOR TO LEAVING SITE.
5. CONSTRUCTION ENTRANCE SHALL BE GRADED IN A MANNER THAT PREVENTS TRACKING OF SEDIMENTS ONTO PUBLIC RIGHT–OF–WAY

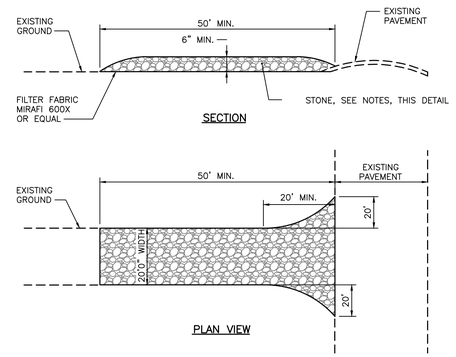

STABILIZED CONSTRUCTION ENTRANCE

NOT TO SCALE

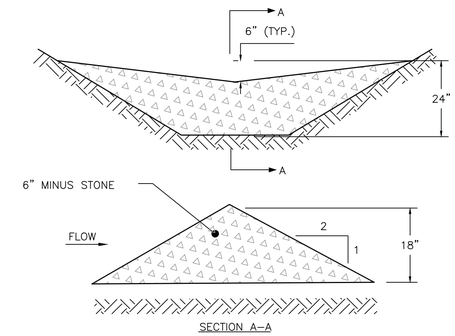

L = THE DISTANCE SUCH THAT POINTS A AND B ARE OF EQUAL ELEVATION

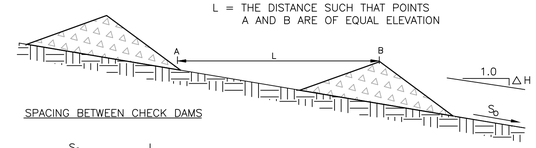

SPACING BETWEEN CHECK DAMS

S_D (FT./FT.)	L (FT.)
0.020	75
0.030	50
0.040	40
0.050	30
0.080	20
0.100	10

STONE CHECK DAM

NOT TO SCALE

GENERAL NOTES:

1. EMBANKMENT FOUNDATION AREA SHALL BE CLEARED OF STUMPS, ROOTS, BRUSH, ETC. TO PROVIDE GOOD CONTACT.
2. BASINS ARE TO BE CONSTRUCTED BEFORE THE GROUND IS FROZEN.
3. ALL NATIVE SOIL IS TO BE SCARIFIED BEFORE THE FIRST LAYER OF FILL.
4. ALL EMBANKMENTS NOT SUPPORTED BY RIPRAP SHALL BE COVERED WITH EROSION CONTROL MIX IN ACCORDANCE WITH THE EROSION AND SEDIMENTATION CONTROL PLAN.

NOTES:

1. RIPRAP SHALL BE INSTALLED ON SLOPES GREATER THAN 2:1 AS NOTED ON THE SITE PLANS.
2. RIPRAP SHALL BE DESCRIBED BY M.D.O.T. 703.26; SIZE AS SHOWN.

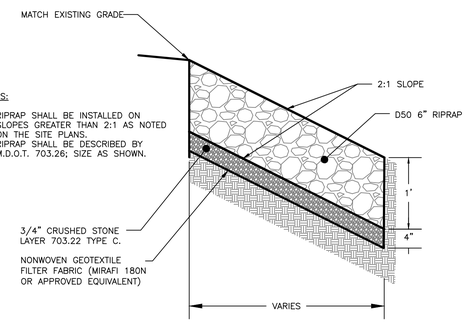

RIPRAP CROSS–SECTION

NOT TO SCALE

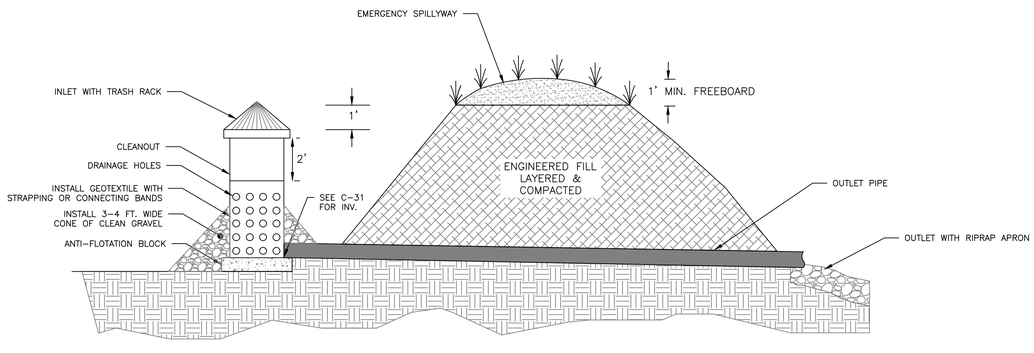

TEMPORARY SEDIMENTATION BASIN CROSS–SECTION

NOT TO SCALE

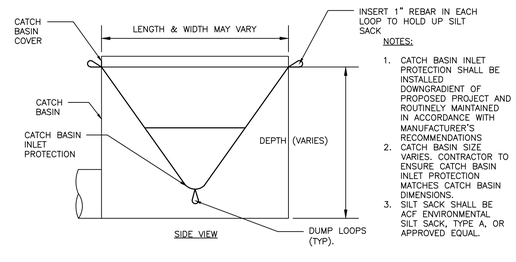

NOTES:

1. CATCH BASIN INLET PROTECTION SHALL BE INSTALLED DOWNGRADIENT OF PROPOSED PROJECT AND ROUTINELY MAINTAINED IN ACCORDANCE WITH MANUFACTURER'S RECOMMENDATIONS
2. CATCH BASIN SIZE VARIES. CONTRACTOR TO ENSURE CATCH BASIN INLET PROTECTION MATCHES CATCH BASIN DIMENSIONS.
3. SILT SACK SHALL BE ACF ENVIRONMENTAL SILT SACK, TYPE A, OR APPROVED EQUAL.

CATCH BASIN INLET PROTECTION

NOT TO SCALE

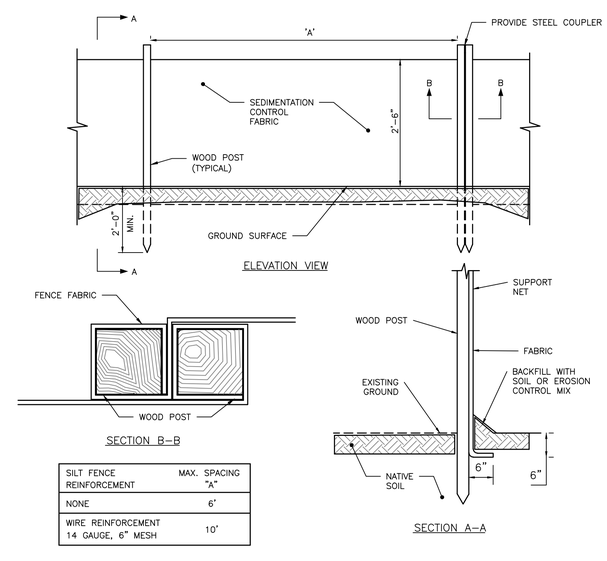

SILT FENCE REINFORCEMENT	MAX. SPACING "A"
NONE	6'
WIRE REINFORCEMENT 14 GAUGE, 6" MESH	10'

SILTATION FENCE DETAIL

NOT TO SCALE

PRELIMINARY
NOT ISSUED FOR CONSTRUCTION

ISSUED FOR	BY	DATE
PRELIM. APP.	WHS	8/22/17

DRAWING NAME: EROSION & SEDIMENTATION CONTROL DETAILS

PROJECT NAME: STROUDWATER PRESERVE

CLIENT: STROUDWATER DEVELOPMENT PARTNERS, LLC
KENNEBUNK, MAINE 04043

ACORN ENGINEERING, INC.

THIS PLAN SHALL NOT BE MODIFIED WITHOUT WRITTEN PERMISSION FROM ACORN ENGINEERING, INC. ANY MODIFICATION, WITHOUT PERMISSION OR OTHERWISE, SHALL BE AT THE USER'S SOLE RISK AND WITHOUT LIABILITY TO ACORN ENGINEERING, INC.

ACORN ENGINEERING, INC.
158 DANFORTH ST. PORTLAND, MAINE 04102
(207) 775–2655

FILE:	1079_CIVIL
JN:	1079
SCALE:	NTS
DESIGNED BY:	WHS
DRAWN BY:	SJL
CHECKED BY:	WHS

STATE OF MAINE WILLIAM H. SAVAGE No. 11451 8-25-17 PROFESSIONAL ENGINEER

DRAWING NO.
C-60