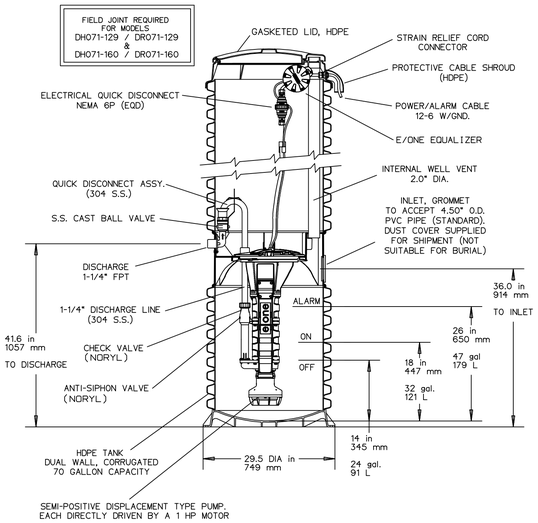

NOTE: DIMENSIONS ARE FOR REF ONLY

CONCRETE BALLAST MAY BE REQUIRED SEE INSTALLATION INSTRUCTION FOR DETAILS

LOW-PRESSURE PUMP STATION DETAIL

NOT TO SCALE

NOTES:

1. PLACE TRENCH BACKFILL MATERIAL IN 12" LIFTS.
2. COMPACT MATERIAL LIFTS TO 92% OF MAX. DRY DENSITY.
3. PAVED AREAS SHALL MATCH TYPICAL ROAD SECTION WHEN LOCATED WITHIN PAVED AREAS.
4. WORK WITHIN NEW WESTBROOK STREET SHALL BE COORDINATED WITH THE DEPARTMENT OF PUBLIC WORKS DIRECTOR. PAVEMENT CUT IN WESTBROOK STREET SHALL BE RESTORED TO EXISTING CONDITIONS OR THE COLLECTOR PAVEMENT PROFILE, WHICHEVER IS MORE STRINGENT.

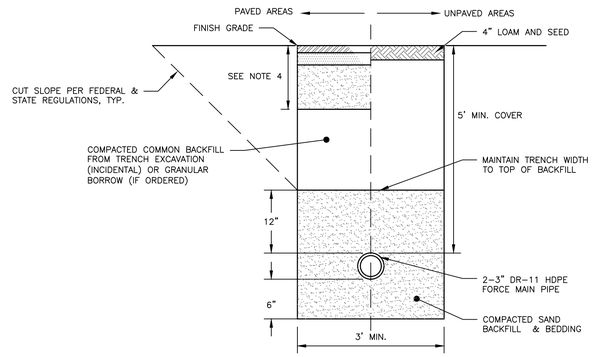

FORCE MAIN TRENCH

NOT TO SCALE

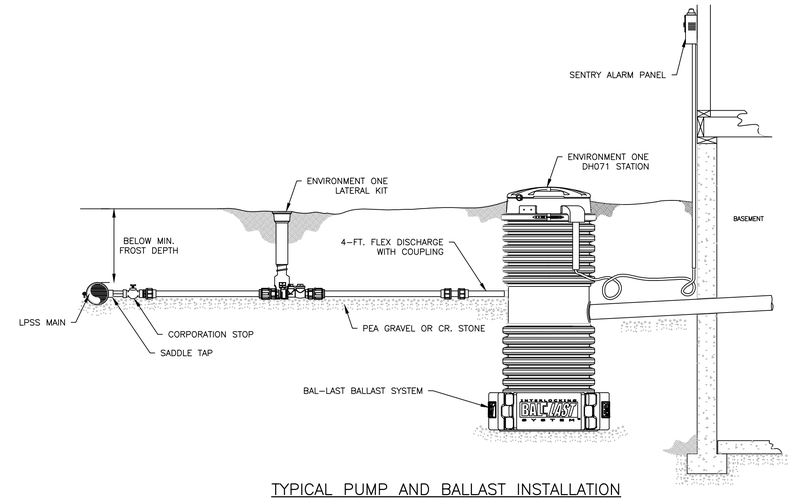

TYPICAL PUMP AND BALLAST INSTALLATION

NOT TO SCALE

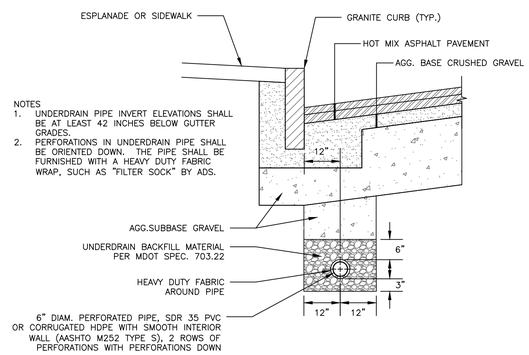

NOTES

1. UNDERDRAIN PIPE INVERT ELEVATIONS SHALL BE AT LEAST 42 INCHES BELOW GUTTER GRADES.
2. PERFORATIONS IN UNDERDRAIN PIPE SHALL BE ORIENTED DOWN. THE PIPE SHALL BE FURNISHED WITH A HEAVY DUTY FABRIC WRAP, SUCH AS "FILTER SOCK" BY ADS.

UNDERDRAIN INSTALLATION – TYPE "B"

NOT TO SCALE

NOTES:

1. SS CURB STOP/CHECK VALVE AND FITTINGS ARE PROVIDED SEPARATELY AND ASSEMBLED BY OTHERS.
2. TO ASSEMBLE, APPLY A DOUBLE LAYER OF TEFLON TAPE, A LAYERS OF PIPE DOPE (SUPPLIED BY OTHERS) TO THE THREADS ON THE PLASTIC FITTINGS AND INSTALL PER MANUFACTURER'S INSTRUCTIONS.
3. ASSEMBLY SHALL BE PRESSURE TESTED BY OTHERS.
4. ASSEMBLY SHALL BY COMPLETED WITH SDR11 HDPE PIPE.
5. TO ORDER SS LATERAL KIT, USE PART # NC0193G0.
6. CURB BOX SHALL BE ORDERED SEPARATELY, SEE ABOVE.
7. PIPE SIZE SHALL BE CONFIRMED BY OTHERS.

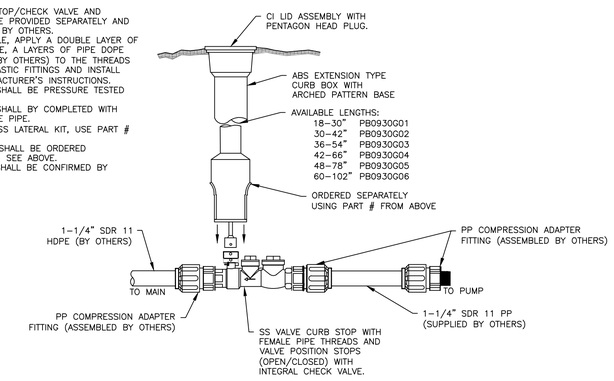

FORCE MAIN SHUT-OFF DETAIL

NOT TO SCALE

NOTES:

1. USE FLEXIBLE RUBBER BOOT WITH TWO STAINLESS STEEL BANDS.
2. LOCATION OF CORED HOLE IN MANHOLE SHOULD BE FIELD CHECKED PRIOR TO INSTALLATION TO ENSURE ADEQUATE SEPARATION FROM MANHOLE BARREL JOINT.
3. CITY ENGINEER SHALL INSPECT AND APPROVE INSTALLATION OF FORCE MAIN PRIOR TO BACKFILLING.

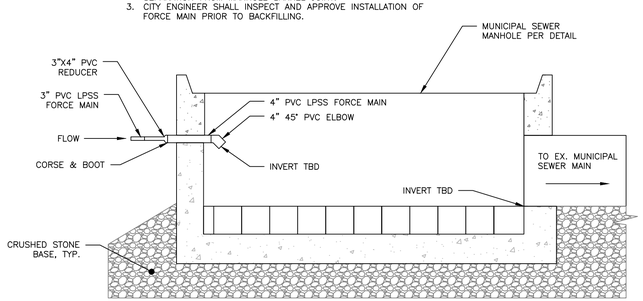

FORCE MAIN TERMINUS MANHOLE

NOT TO SCALE

NOTES:

1. CONCRETE TO HAVE A MIN. PSI OF 5,000 @ 28 DAYS.
2. CEMENT: TYPE III PER ASTM C150-81.
3. DESIGN LOADING: H-20 PER ASTM C-478.
4. JOINTS TO BE SEALED WITH 2 STRIPS OF "CON-SEAL".
5. FITTINGS IN MANHOLE SHALL BE SCHEDULE 80.
6. ALL BALL VALVES SHALL HAVE O-RINGS
7. BALL VALVES SHALL BE TRUE UNION 2000 INDUSTRIAL BALL VALVES OR EQUIVALENT.

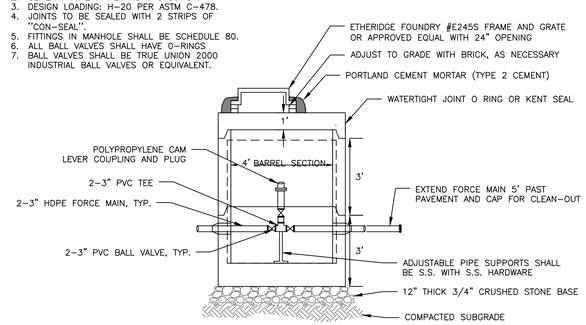

SIDE PROFILE

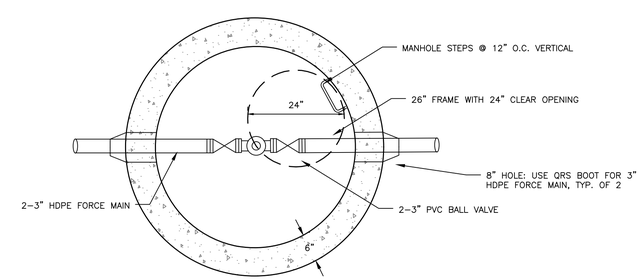

PLAN VIEW

FORCE MAIN MANHOLE CLEAN-OUT

NOT TO SCALE

PRELIMINARY
NOT ISSUED FOR CONSTRUCTION

ISSUED FOR	BY	DATE
PRELIM. APP.	WHS	8/22/17

DRAWING NAME: UTILITY DETAILS – 3

PROJECT NAME: STROUDWATER PRESERVE

CLIENT: STROUDWATER DEVELOPMENT PARTNERS, LLC
KENNEBUNK, MAINE 04043

ACORN ENGINEERING, INC.

THIS PLAN SHALL NOT BE MODIFIED WITHOUT WRITTEN PERMISSION FROM ACORN ENGINEERING, INC. ANY MODIFICATIONS MADE WITHOUT WRITTEN PERMISSION OR OTHERWISE, SHALL BE AT THE USER'S SOLE RISK AND WITHOUT LIABILITY TO ACORN ENGINEERING, INC.

ACORN ENGINEERING, INC.
158 DANFORTH STREET, PORTLAND, MAINE 04102
(207) 775-2655

FILE:	1079_CIVIL
JN:	1079
SCALE:	NTS
DESIGNED BY:	WHS
DRAWN BY:	SJL
CHECKED BY:	WHS

STATE OF MAINE WILLIAM H. SAVAGE No. 8-25-17 PROFESSIONAL ENGINEER

DRAWING NO.
C-55