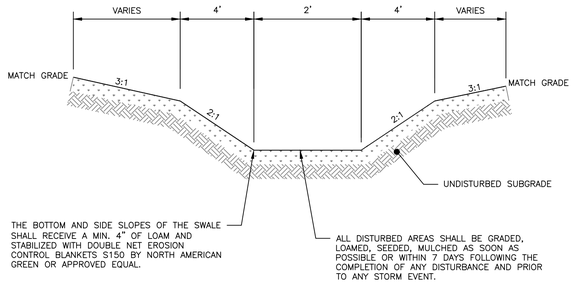

TYPICAL DRAINAGE SWALE CROSS–SECTION

NOT TO SCALE

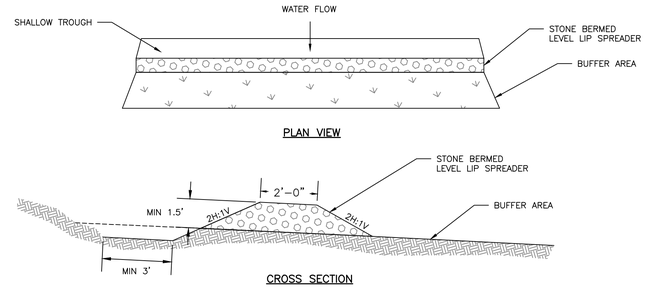

BERM STONE SIZE
% PASSING BY WEIGHT
100
84–100
63–83
42–55
8–12

NOTES:

1. FIELDSTONE, ROUGH QUARRIED STONE, BLASTED LEDGE ROCK OR TAILINGS ARE ACCEPTABLE BERM MATERIALS.
2. MEDIAN STONE SIZE TO BE APPROX 3 INCHES AT A MAXIMUM SIZE OF 6 INCHES. SEE TABLE.

LEVEL LIP SPREADER DETAIL

NOT TO SCALE

NOTES:

1. INSTALL "CASCO TRAP" AS MANUFACTURED BY THE ETHERIDGE FOUNDRY, OR APPROVED EQUIVALENT AS SUPPLIED BY THE LEBARON FOUNDRY, MODEL #L, 202 "STANDARD CATCH BASIN TRAP". INSTALL TRAP IN ALL CATCH BASINS.
2. THE CASCO TRAP IS AN ETHERIDGE STYLE DESIGNED TO ELIMINATE CEMENTING OF THE TRAP.
3. TO INSTALL, THE CASCO TRAP IS INSERTED INTO THE PIPE WITH THE HOOD DOWN.

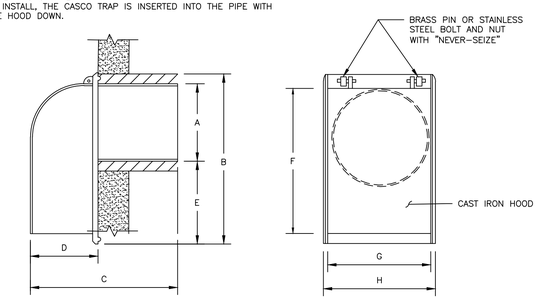

SIZE	A	B	C	D	E	F	G	H
6"	5 1/2	13 3/8	13 3/8	5 3/8	5 7/8	11 5/8	6 1/2	7 1/4
8"	7 1/2	15	15 3/8	5 1/2	5 3/8	13 3/4	8 3/4	9 3/8
10"	9 1/2	16	16 1/4	6	4 1/2	14 1/8	11 1/2	12 3/8
12"	11 1/2	17	22	8	3 1/2	17	12 1/2	13 3/8
15"	14 1/2	21 3/4	22 3/4	10 1/4	7	20 1/2	14 1/4	15 3/4

CASCO TRAP DETAIL

NOT TO SCALE

NOTES:

1. REFER TO THE BUILDING ARCHITECTS PLANS FOR THE BUILDING FOUNDATION, BACKFILL, ROOF DRAIN, SIDEWALK AND OTHER DETAILS.
2. PERFORATIONS IN UNDERDRAIN PIPE SHALL BE ORIENTED DOWN.
3. INSTALL STONE DRIP EDGE IN A LOCATIONS SUBJECT TO ROOF RUNOFF. WIDTH SHALL BE A MIN. 12" BEYOND THE PROJECT OF THE ROOF EVE.
4. FOUNDATION WALL FOOTINGS SHALL BE CONSTRUCTED TO A MIN. DEPTH OF 4 FT BELOW ADJACENT FINISH GRADE. REFER TO STRUCTURAL ENGINEERS PLANS FOR ADDITIONAL INFORMATION AND MIN. REQUIREMENTS.

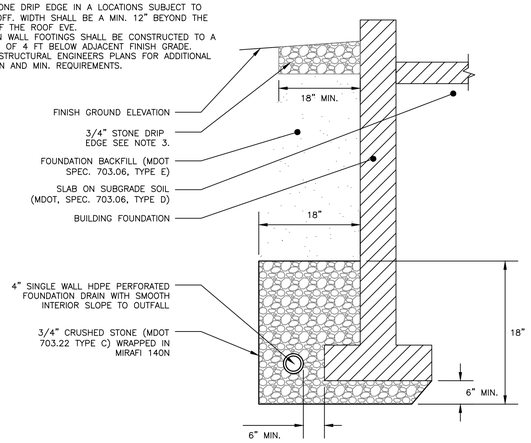

FOUNDATION DRAIN DETAIL

NOT TO SCALE

NOTES:

1. ALL CONCRETE TO HAVE A MIN. OF 4,000 PSI COMPRESSIVE STRENGTH AT 28 DAYS.
2. DESIGN LOAD FOR H–20 WHEEL LOAD.
3. STRUCTURE TO CONFORM TO ASTM–C478 SPECIFICATIONS.
4. REINFORCE TO 0.12 IN SQ./LF.
5. JOINTS SEALED WITH BUTYL RUBBER.
6. POLYPROPYLENE STEPS 12" O.C.

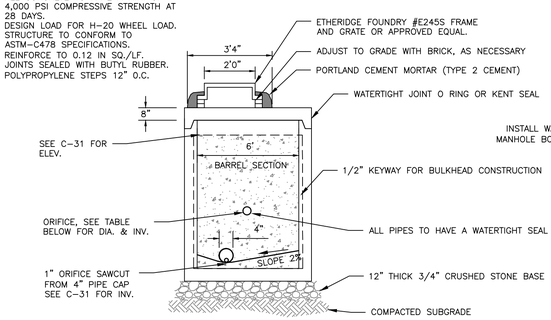

SIDE PROFILE

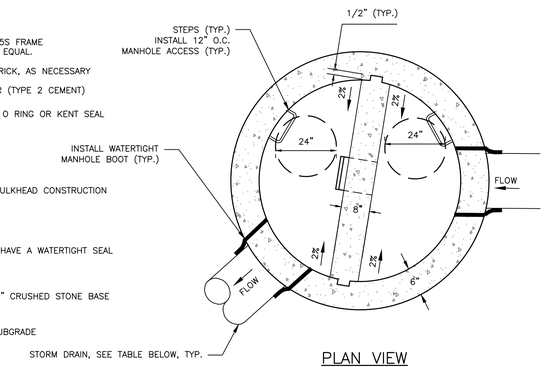

PLAN VIEW

OUTLET CONTROL STRUCTURE

NOT TO SCALE

OUTLET CONTROL STRUCTURE SCHEDULE					
STRUCTURE	RIM	ORIFICE INV.	INV. IN	INV. OUT	BULKHEAD ELEV.
OCS–1	40'	33.00' (1.7")	33.10' (12" HDPE)	32.90' (12" HDPE)	37.20'
OCS–2	35'	28.00' (2.2")	28.10' (15" HDPE)	27.90' (15" HDPE)	32.20'
OCS–3	31'	24.00' (1.3")	24.10' (6" PVC)	23.90' (12" HDPE)	28.20'

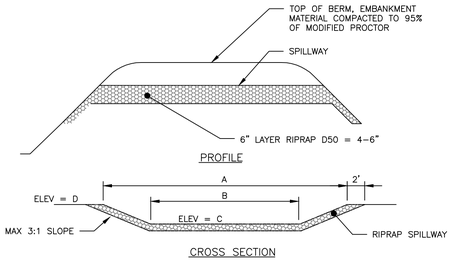

SCHEDULE				
	ITEM	POND 1	POND 2	VUSF 3
A	SPILLWAY WIDTH (TOP)	18'	18'	18'
B	SPILLWAY WIDTH (BOT)	15'	15'	15'
C	SPILLWAY INVERT ELEV.	39'	34'	31.65'
D	TOP OF BERM ELEV.	40'	35'	32.50'

OVERFLOW SPILLWAY DETAIL

NOT TO SCALE

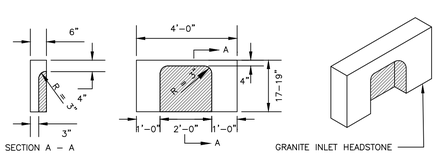

4' GRANITE HEADSTONE FOR CATCH BASIN INLET

NOT TO SCALE

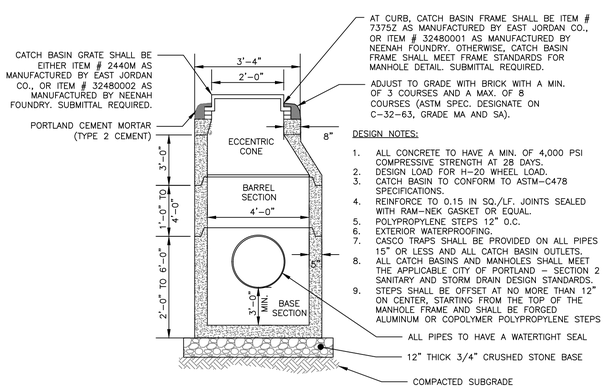

DESIGN NOTES:

1. ALL CONCRETE TO HAVE A MIN. OF 4,000 PSI COMPRESSIVE STRENGTH AT 28 DAYS.
2. DESIGN LOAD FOR H–20 WHEEL LOAD.
3. CATCH BASIN TO CONFORM TO ASTM–C478 SPECIFICATIONS.
4. REINFORCE TO 0.15 IN SQ./LF. JOINTS SEALED WITH RAM–NEK GASKET OR EQUAL.
5. POLYPROPYLENE STEPS 12" O.C.
6. EXTERIOR WATERPROOFING.
7. CASCO TRAPS SHALL BE PROVIDED ON ALL PIPES 15" OR LESS AND ALL CATCH BASIN OUTLETS.
8. ALL CATCH BASINS AND MANHOLES SHALL MEET THE APPLICABLE CITY OF PORTLAND – SECTION 2 SANITARY AND STORM DRAIN DESIGN STANDARDS.
9. STEPS SHALL BE OFFSET AT NO MORE THAN 12" ON CENTER, STARTING FROM THE TOP OF THE MANHOLE FRAME AND SHALL BE FORGED ALUMINUM OR COPOLYMER POLYPROPYLENE STEPS

4'–0" DIAMETER PRECAST CATCH BASIN/MANHOLE

NOT TO SCALE

NOTES:

1. RIPRAP SHALL BE DESCRIBED BY M.D.O.T. 703.26 EXCEPT SIZE SHALL BE AS SHOWN.

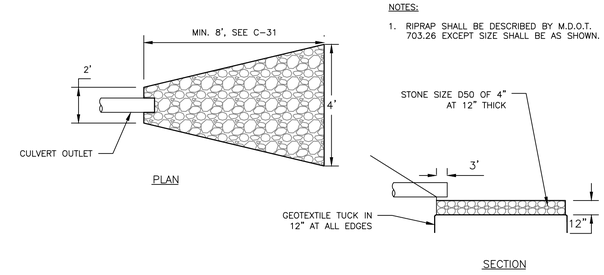

OUTLET APRON DETAIL

NOT TO SCALE

PRELIMINARY
NOT ISSUED FOR CONSTRUCTION

ISSUED FOR	BY	DATE
PRELIM. APP.	WHS	8/22/17

DRAWING NAME: DRAINAGE DETAILS

PROJECT NAME: STROUDWATER PRESERVE

CLIENT: STROUDWATER DEVELOPMENT PARTNERS, LLC
KENNEBUNK, MAINE 04043

ACORN ENGINEERING, INC.

ACORN ENGINEERING, INC.
158 DANFORTH STREET PORTLAND, MAINE 04102
(207) 775–2855

THIS PLAN SHALL NOT BE MODIFIED WITHOUT WRITTEN PERMISSION FROM ACORN ENGINEERING, INC. ANY MODIFICATIONS, WHETHER OR OTHERWISE, SHALL BE AT THE USER'S SOLE RISK AND WITHOUT LIABILITY TO ACORN ENGINEERING, INC.

FILE:	1079_CIVIL
JN:	1079
SCALE:	NTS
DESIGNED BY:	WHS
DRAWN BY:	SJL
CHECKED BY:	WHS

STATE OF MAINE WILLIAM H. SAMUELS No. 11411 8-25-17 PROFESSIONAL ENGINEER

DRAWING NO.
C-56