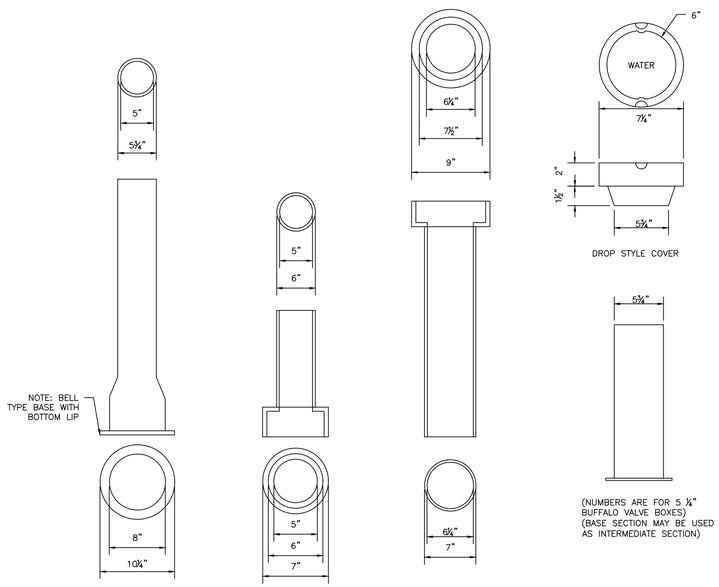

VALVE BOX & COVER
NOT TO SCALE

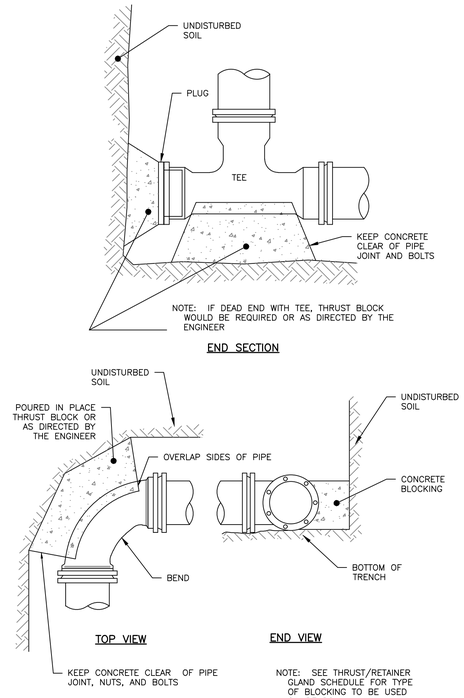

THRUST BLOCKING
NOT TO SCALE

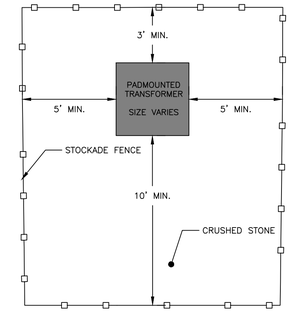

NOTES:
1. WHERE DANGER OF PLOW OR TRAFFIC DAMAGE EXISTS, BARRIERS CONSISTING OF CONCRETE FILLED 6 INCH IPS STEEL POSTS SET 4 FEET DEEP SHALL BE PROVIDED FOR PROTECTION (PRESSURE TREATED 6X6 INCH MIN. TIMBER POSTS MAY BE SUBSTITUTED IN RESIDENTIAL AREAS). POSTS SHALL NOT INTERFERE WITH TRANSFORMER ACCESS. GENERALLY THE POSTS SHALL BE LOCATED NEAR THE CORNERS OF THE TRANSFORMERS.
2. THE SETBACKS DEPICT CLEARANCES FROM OBSTRUCTIONS INCLUDING TREES, SHRUBS, AND FENCES.
3. THERE SHALL BE NO OPENINGS IN THE BUILDING WALL IN BACK OF, BESIDE, OR OVER THE TRANSFORMER UNLESS THE TRANSFORMER IS A MIN. OF 10 FEET FROM THE BUILDING.
4. SIDE CLEARANCES FROM DOORS OR WINDOWS SHALL NOT BE LESS THAN 10 FEET.
5. THERE SHALL BE A MIN. OF 10 FEET BETWEEN THE TRANSFORMER AND ANY GAS METER/REGULATOR, GAS RELIEF VALVE, GAS VENT DISCHARGE, GAS FILLING CONNECTION, OR PROPANE TANK. SOME INSURANCE COMPANIES MAY REQUIRE INCREASED CLEARANCES.
6. TRANSFORMER SHALL BE LOCATED FAR ENOUGH AWAY FROM BUILDING OVERHANGS SO THAT THEY WILL NOT BE SUBJECT TO DAMAGE BY FALLING ICE AND SNOW.
7. IF TRANSFORMER IS NOT INSTALLED IMMEDIATELY UPON THE INSTALLATION OF THE CABLE IN THE PAD, THE CONTRACTOR SHALL PROVIDE AND INSTALL A CMP APPROVED CONCRETE, STEEL, OR FIBERGLASS COVER OVER THE PAD OPENING TO ELIMINATE EXPOSURE OF THE CABLE.

CMP TRANSFORMER SETBACKS
NOT TO SCALE

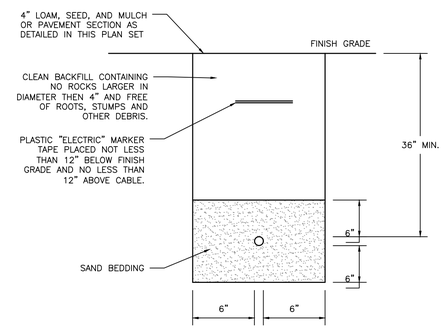

SECONDARY ELECTRICAL TRENCH
NOT TO SCALE

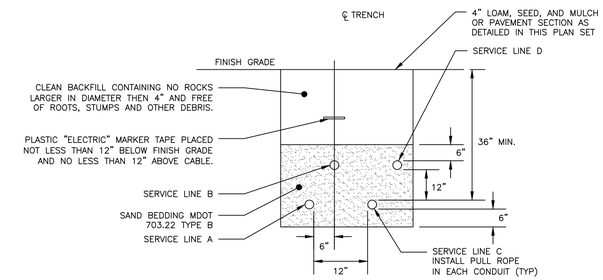

CONDUIT TYPE

SERVICE	CONDUIT SIZE	GRASS AND PAVED AREAS	UTILITY
A	2-5"	SCHEDULE 40 PVC ELECTRICAL GRADE	PRIMARY POWER
B	2-4"	SCHEDULE 40 PVC	COMMUNICATION
C	2-4"	SCHEDULE 40 PVC ELECTRICAL GRADE	SPARE
D	2-4"	SCHEDULE 40 PVC	CABLE

NOTES:
1. ONE CONDUIT CAPPED FOR SPARE, PROVIDE GALVANIZED STEEL LONG SWEEP AT RISER POLE AND EXTEND GALVANIZED CONDUIT TO 10" ABOVE GRADE AT POLE WITH STAND-OFF BRACKETS.
2. MINIMUM SEPARATION OF 24 INCHES BETWEEN PRIMARY CABLE/CONDUIT AND GAS LINES SHALL BE MAINTAINED.

UTILITY TRENCH – PRIMARY AND SECONDARY POWER, TELEPHONE, AND CABLE
NOT TO SCALE

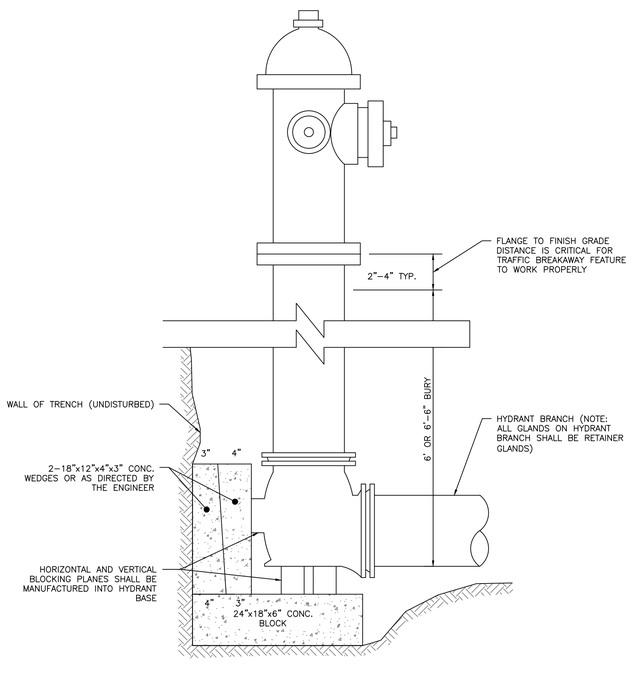

TYPICAL HYDRANT INSTALLATION DETAIL
NOT TO SCALE

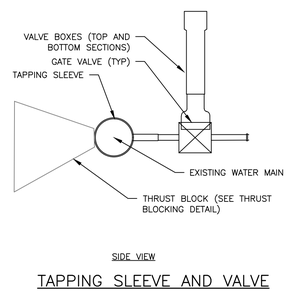

TAPPING SLEEVE AND VALVE
NOT TO SCALE

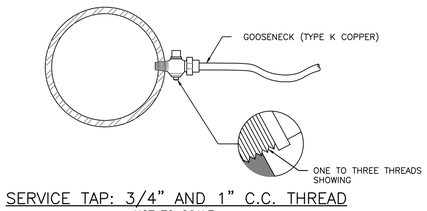

SERVICE TAP: 3/4" AND 1" C.C. THREAD
NOT TO SCALE

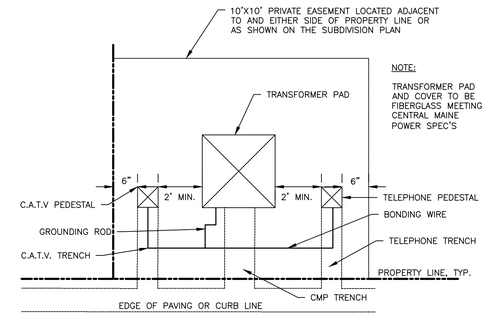

TYPICAL TRANSFORMER DETAIL
NOT TO SCALE

NOTES:
1. THE WATER TRENCH SHALL BE CONSTRUCTED IN ACCORDANCE WITH THE PORTLAND WATER DISTRICT STANDARD DETAILS & SPECIFICATIONS.
2. IF LESS THAN 5'-6" OF COVER IS POSSIBLE ADD 1 INCH OF "BLUE DOW" RIGID INSULATION FOR EVERY 12" LESS COVER.

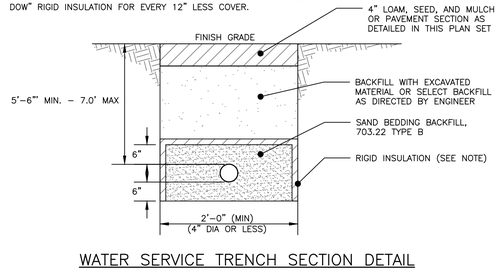

WATER SERVICE TRENCH SECTION DETAIL
NOT TO SCALE

NOTES:
1. ALL MATERIALS AND INSTALLATION PROCEDURES MUST COMPLY WITH THE CITY OF PORTLAND WATER DISTRICT (PWD) SPECIFICATIONS.
2. CURB STOP BALL VALVE TO BE MADE OF COPPER OR BRASS UNLESS OTHERWISE NOTED BY THE PORTLAND WATER DISTRICT.
3. SERVICE LINE TO BE MADE OF TYPE K COPPER.
4. CONCRETE BLOCKING SHALL BE ADDED TO THE BASE OF THE CURB STOP TO PROVIDE STRUCTURAL SUPPORT FOR THE CURB STOP AND SERVICE BOX.

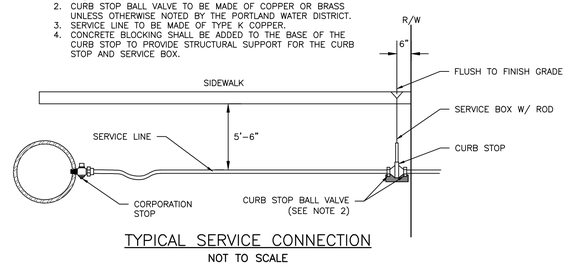

TYPICAL SERVICE CONNECTION
NOT TO SCALE

PRELIMINARY
NOT ISSUED FOR CONSTRUCTION

ISSUED FOR	BY	DATE
PRELIM. APP.	WHS	8/22/17

DRAWING NAME: UTILITY DETAILS – 2

PROJECT NAME: STROUDWATER PRESERVE

CLIENT: STROUDWATER DEVELOPMENT PARTNERS, LLC
KENNEBUNK, MAINE 04043

ACORN ENGINEERING, INC.

THIS PLAN SHALL NOT BE MODIFIED WITHOUT WRITTEN PERMISSION FROM ACORN ENGINEERING, INC. ANY MODIFICATIONS, WHETHER MADE OR OTHERWISE, SHALL BE AT THE USER'S SOLE RISK AND WITHOUT LIABILITY TO ACORN ENGINEERING, INC.

ACORN ENGINEERING, INC.
158 DANFORTH STREET, PORTLAND, MAINE 04102
(207) 775-2655

FILE:	1079_CIVIL
JN:	1079
SCALE:	NTS
DESIGNED BY:	WHS
DRAWN BY:	SJL
CHECKED BY:	WHS

STATE OF MAINE
WILLIAM H. SAVAGE
No. 5187
8-25-17
PROFESSIONAL ENGINEER

DRAWING NO.
C-54