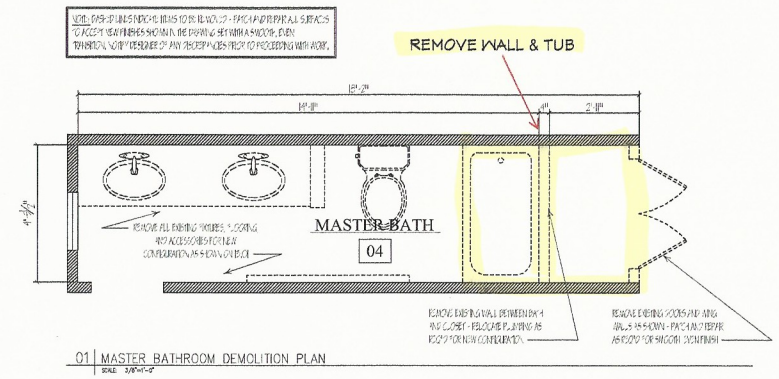

01 MASTER BATHROOM DEMOLITION PLAN
SCALE: 3/8"=1'-0"

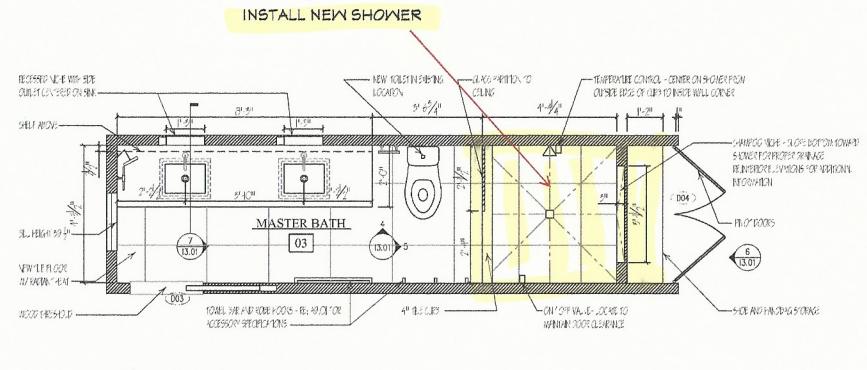

02 MASTER BATHROOM
SCALE: 3/8"=1'-0"

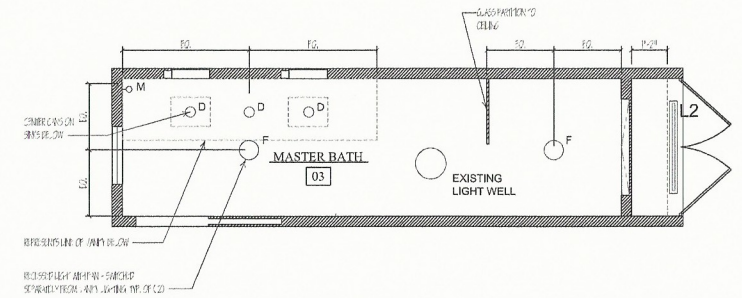

03 MASTER BATHROOM RCP
SCALE: 3/8"=1'-0"

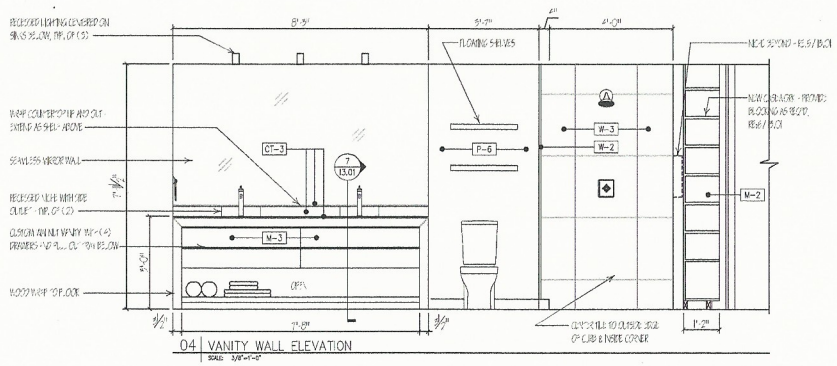

04 VANITY WALL ELEVATION
SCALE: 3/4"=1'-0"

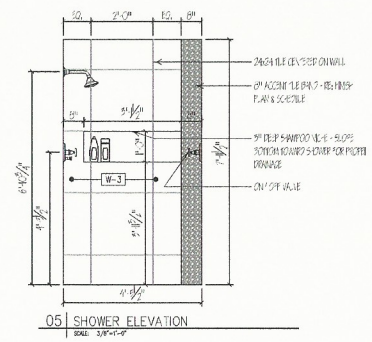

05 SHOWER ELEVATION
SCALE: 3/4"=1'-0"

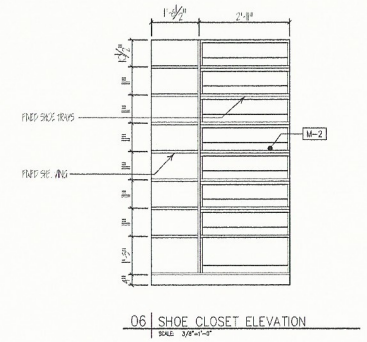

06 SHOE CLOSET ELEVATION
SCALE: 3/4"=1'-0"

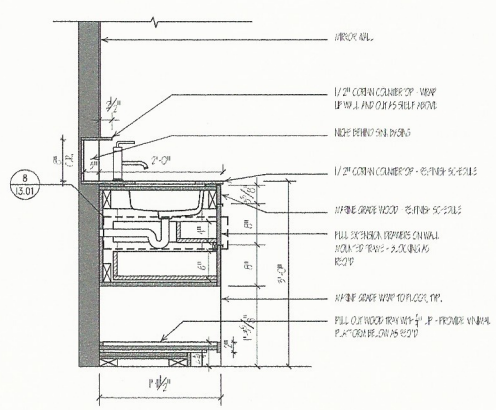

07 VANITY SECTION
SCALE: 3/4"=1'-0"

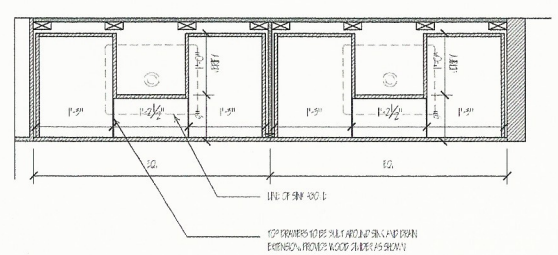

08 TOP DRAWER PLAN DETAIL
SCALE: 3/4"=1'-0"

NOT FOR CONSTRUCTION

Dimension Notes:

4'-0"	TO FACE OF STUD (NEW) TO FACE OF WALL (EXISTING COND.)
4'-0" MIN.	MINIMUM DIMENSION ALLOWED (MAY BE MORE)
4'-0" MAX.	MAXIMUM DIMENSION ALLOWED (MAY BE LESS)
4'-0" CLR.	EXACT DISTANCE BETWEEN FINAL FINISHED SURFACES (ALL DIMENSIONS ARE TO FACE OF FRAMING UNLESS OTHERWISE NOTED)
4'-0" VERIFY	TARGET DIMENSION WHICH MAY NOT BE ACHIEVED IN FIELD – BE AWARE OF POSSIBLE CHANGE.
ALIGN	ALIGN THESE FINISH SURFACES

General Plan Notes:

1. ALL ELEVATION REFERENCES INDICATED ON THIS PLAN ARE TO FINISH, UNLESS NOTED OTHERWISE.
2. SUBMIT ANY ALTERNATES TO ITEMS SPECIFIED FOR APPROVAL PRIOR TO INSTALLATION.
3. CEILING HEIGHTS ARE FROM FINISH FLOOR U.N.O..
4. MOUNT BOTTOM OF TV 16" ABOVE TOP OF FIREPLACE – VERIFY LOCATION WITH OWNER PRIOR TO INSTALLATION.
5. PROVIDE WATER RESISTANT DENS SHIELD TILE BACKER BD. ON WALL SURFACES OF WET AREAS, BEHIND TILE & F.R.P. & ALL OTHER LOCATIONS REQUIRED BY LOCAL CODES.
6. REFER TO FLOOR FINISH, REFLECTED CEILING, & SCHEDULE FOR ALL FINISH INFO.
7. PROVIDE BACKING/ STRAPPING AT THE FOLLOWING LOCATIONS:
   A. LAVATORY
   B. WATER LINES @ ALL PLUMBING FIXTURES
   C. ART WORK
8. VERIFY ALL BASE BUILDING DIMENSIONS PRIOR TO CONSTRUCTION. COORDINATE ALL DISCREPANCIES W/DESIGNER IMMEDIATELY.
9. G.C. TO COORDINATE ALL FLOOR FINISHES TO ALLOW FOR SMOOTH, LEVEL TRANSITIONS BETWEEN MATERIALS.
10. MINIMUM FLAMESPREAD CLASSIFICATION OF INTERIOR FINISHES SHALL CONFORM TO LOCAL & STATE BUILDING CODES/ ORDINANCES.
11. COUNTERSINK ALL NAIL & SCREW HEADS MIN. 1/8" ON EXPOSED CARPENTRY.
12. G.C. IS RESPONSIBLE FOR PATCHING & REPAINTING WALLS & CEILINGS AFTER INSTALLATION OF DECOR.
13. REFER TO I1.21 FOR LIGHTING LOCATION PLAN

Ceiling Legend:

SYMBOL	DESCRIPTION
C	FLUSH MOUNT FIXTURE – SUPPLIED BY U.D.
D	TECH LIGHTING, ELEMENT, 3" FIXED LED DOWNLIGHT H: E3RFF–LH8274DI T: E3RFB–CW
F	FANTECH, PB110H – SWITCH FAN SEPARATELY, PROVIDE ALL CANS ON DIMMERS, TYP.
L1	LINEAR LOW VOLTAGE WALL WASHER WITH 30° ANGLE UP LIGHT MOUNTED ABOVE CABINETRY
L2	36" STRIP FLUORESCENT
M	8511, TBA BATHROOM FASHION, SQUARE LED LIGHTED MAKEUP MIRROR – VERIFY WITH OWNER PRIOR TO PURCHASE
P1	LBL BONN PENDANT, HS461ORSCLEDMPT, MOUNT BOTTOM @ 18" ABOVE BASED COUNTER – VERIFY WITH OWNER PRIOR TO PURCHASE
P2	NOT USED
W	TECH LIGHTING, ELEMENT, 3" ADJUSTABLE LED DOWNLIGHT H: E3RFF–LH8274AI T: E3RFB–CW
$	SINGLE SWITCH
$D	DIMMING SWITCH
$3D	DIMMING 3–WAY SWITCH

Ceiling Plan Notes:

1. ARCHITECTURAL REFLECTED CEILING PLAN REFLECTS ARCHITECTURAL INTENT ONLY. REFER TO ENGINEERING DRAWINGS & SPECS. FOR TYPE, CIRCUITING, ETC.
2. ALL ELEVATION REFERENCES INDICATED ON THIS PLAN ARE TO FINISH, U.N.O.
3. ALL SWITCHES TO BE MOUNTED AT 3'-6" A.F.F. U.N.O.
4. ALL LIGHT FIXTURES THAT ARE NOT DIMENSIONED ARE TO BE CENTERED OVER CASEWORK BELOW, SEE FLOOR PLAN FOR ADDITIONAL INFORMATION.
5. ALL ITEMS WALL AND CEILING MOUNTED SHALL BE INSTALLED PER MANUFACTURER'S RECOMMENDATIONS. ADDITIONALLY, WHETHER DETAILED OR NOT, PROVIDE REQUIRED BLOCKING.
6. ALL CEILING FIXTURES (i.e. DIFFUSERS, LIGHTS, GRILLS, ETC.) TO BE PAINTED TO MATCH ADJACENT CEILING.
7. G.C. TO COORDINATE LIGHT FIXTURES WITH ALL OTHER ABOVE CEILING WORK PRIOR TO ORDERING FIXTURES.
8. INSTALLATION OF SIGHT BAFFLES ARE REQUIRED AT RETURN AIR SLOTS. ANY AREA VISIBLE FROM THE ROOM SIDE IS TO BE PAINTED PER FINISH SCHEDULE.
9. CEILING SUPPORT SYSTEMS ARE NOT DESIGNED OR INTENDED TO SUPPORT THE WEIGHT OF ADDITIONAL EQUIPMENT, CABLE, CONDUIT, MECHANICAL EQUIPMENT OR OTHER CONSTRUCTION. ALL SUCH ELEMENTS ARE TO BE SUPPORTED FROM THE BASE BUILDING STRUCTURE.
10. VERIFY THAT ALL AIR DEVICES WILL FIT AS INDICATED BEFORE PROCEEDING WITH FRAMING CEILING. NOTIFY ARCHITECT IF RELOCATION OR IF SHIFTING OF OTHER ELEMENTS IS REQUIRED.
11. NO CEILING SYSTEM IS TO BE SUPPORTED OR IN CONTACT W/ ANY DUCTWORK OR HVAC UNIT.
12. ALL LIGHT FIXTURES, WIRING METHODS, ETC. W/ A PLENUM/OPEN CEILING MUST BE PLENUM APPROVED PER LOCAL & STATE ORDINANCES/CODES.
13. PROVIDE ALL CANS ON DIMMER.
14. ELECRICAL CONTRACTOR TO SUPPLY 10% SURPLUS BULBS FOR EACH LAMP TYPE.

Drawing: MASTER BATH PLANS, ELEVATIONS, & DETAILS

I3.01

Date: 12.17.14
Scale: AS SHOWN
Designed By: TAD
Drawn By: TLD
Set: CONSTRUCTION SET

Client: GARRAND/PIERSON RESIDENCE
6 PARTRIDGE CIRCLE
PORTLAND, MAINE 04102

Architect:

Revisions and Notes:

Interior Architecture:
urbandwellings
425 1/2 CONGRESS STREET, 2nd Flr
PORTLAND, MAINE 04101
P 207.780.0135 F 207.842.0056