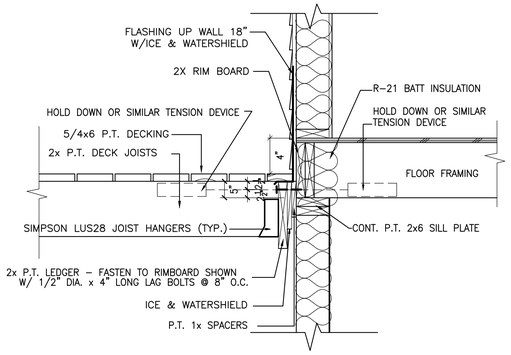

1 DECK / JOIST DETAIL SCALE: 1"=1'-0

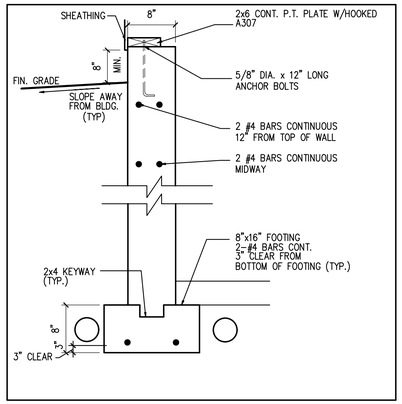

2 TYPICAL FOUNDATION WALL SCALE: 1"=1'-0

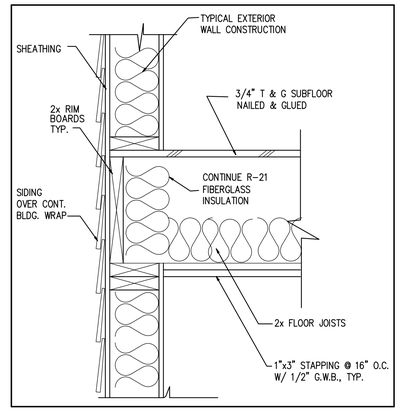

3 FLOOR FRAMING DETAIL 1 1/2" = 1'-0"

GENERAL NOTES:

1. All work shall be in accordance with IRC 2009, IBC Basic Building Code, NFPA-70 National Electric Code, Maine State Plumbing Code, ASHRAE, U.L., NFPA Codes and all local, State and Federal requirements.
2. All required City and State permits must be obtained before any construction begins.
3. Structural, Mechanical, Electrical and Plumbing design and installation by others shall be performed in accordance with local, State and Federal standards.
4. Seal all openings & mechanical penetrations with approved fire safing material.
5. Building shall have approved smoke detectors in accordance with NFPA-101 Life Safety Code.

HEADER SCHEDULE

ROUGH OPENING	HEADER SIZE
0 – 3'-0"	(3) – 2x6
3'-1" – 4'-6"	(3) – 2x8
4'-7" – 5'-8"	(3) – 2x10
5'-9" – 7'-0"	(3) – 2x12

NOTE: PROVIDE JAMBS BOTH ENDS AS FOLLOWS:
2x6 JACK PLUS 2x6 KING UP TO 4'-6" ROUGH OPENING
(2) 2x6 JACKS PLUS (2) 2x6 KINGS UP TO 7'-0" ROUGH OPENING

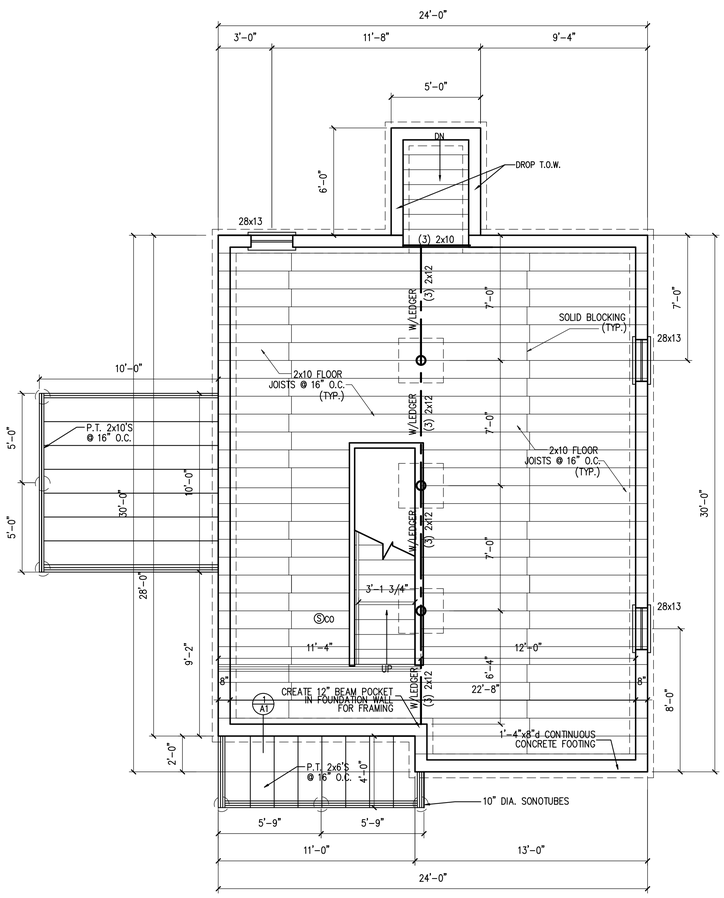

FOUNDATION/FRAMING PLAN
SCALE :1/4"=1'-0"

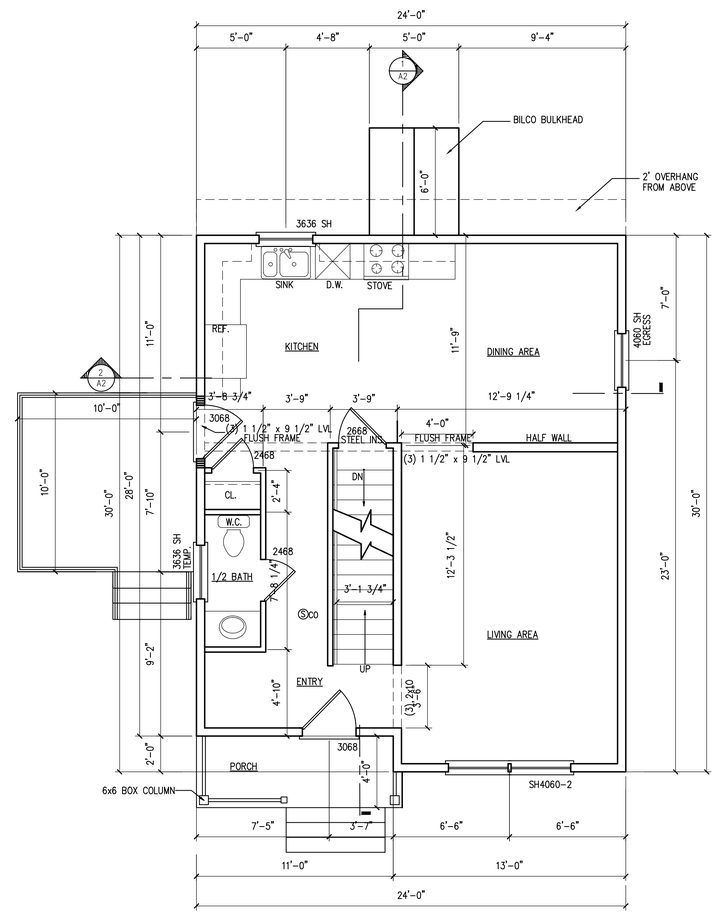

FIRST FLOOR PLAN
698 S.F. SCALE :1/4"=1'-0"

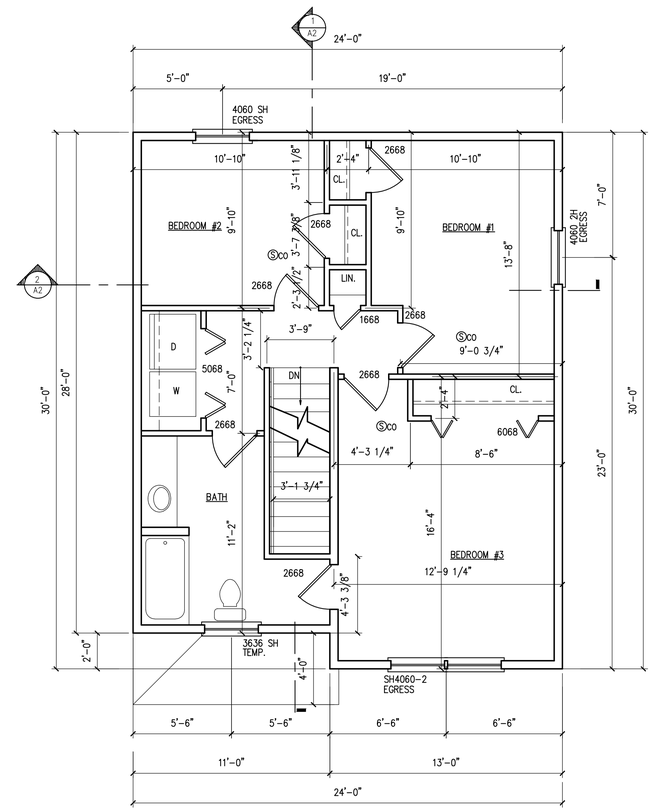

SECOND FLOOR PLAN
746 S.F. SCALE :1/4"=1'-0"

RIVERVIEW STREET
PORTLAND, MAINE

DRAWINGS THIS SHEET
FOUNDATION/FRAMING PLAN
FIRST FLOOR PLAN /
SECOND FLOOR PLAN
DETAILS

DATE
12/05/15

A1