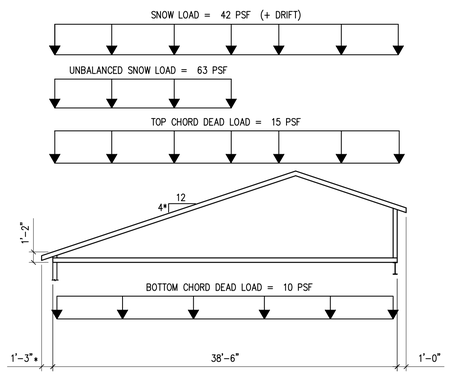


TRUSS DIAGRAM - TRUSS T-1 SCALE: 1/8"=1'-0" 1

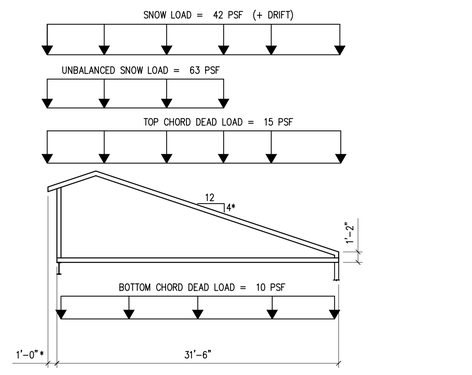


TRUSS DIAGRAM - TRUSS T-2 SCALE: 1/8"=1'-0" 2

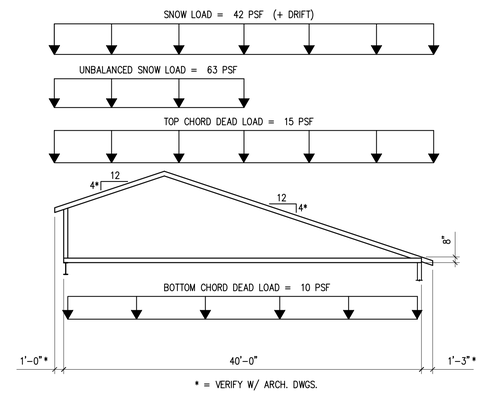


TRUSS DIAGRAM - TRUSS T-3 SCALE: 1/8"=1'-0" 3

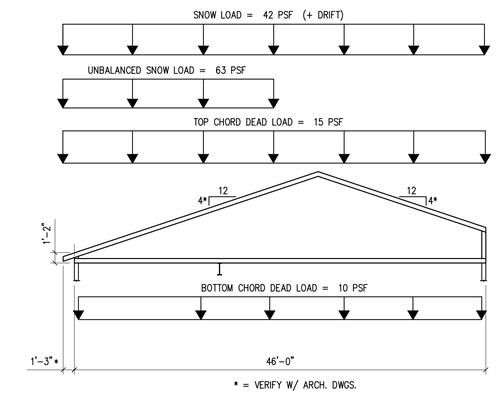


TRUSS DIAGRAM - TRUSS T-4 SCALE: 1/8"=1'-0" 4

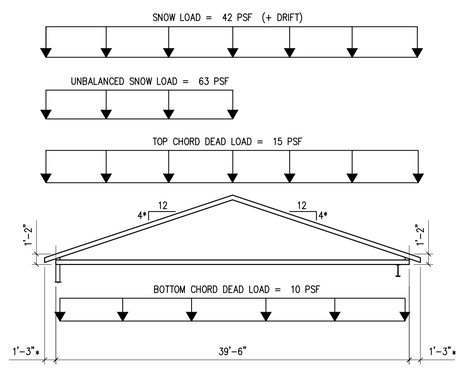


TRUSS DIAGRAM - TRUSS T-5 SCALE: 1/8"=1'-0" 5

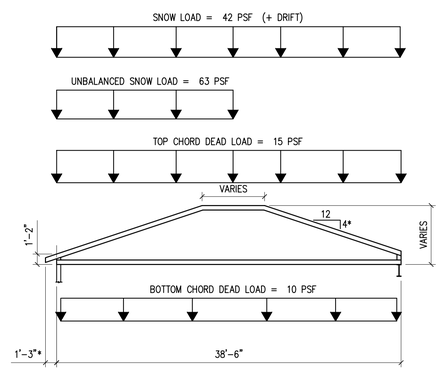


TRUSS DIAGRAM - TRUSS T-6 SCALE: 1/8"=1'-0" 6

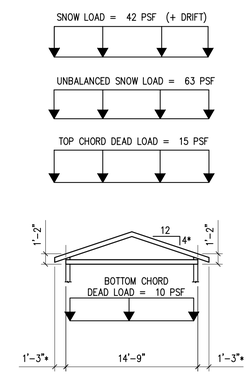


TRUSS DIAGRAM - TRUSS T-7 SCALE: 1/8"=1'-0" 7

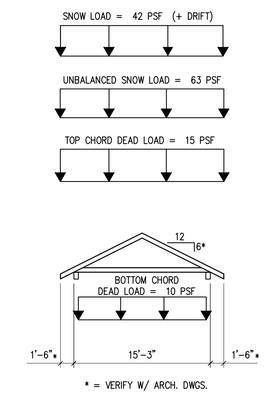


TRUSS DIAGRAM - TRUSS T-8 SCALE: 1/8"=1'-0" 8

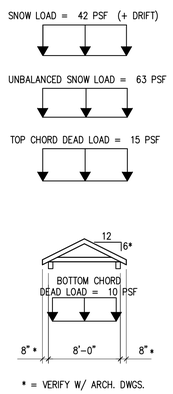


TRUSS DIAGRAM - TRUSS T-9 SCALE: 1/8"=1'-0" 9

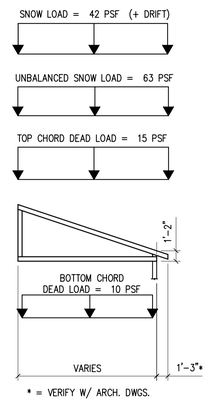


TRUSS DIAGRAM - TRUSS T-12 SCALE: 1/8"=1'-0" 10

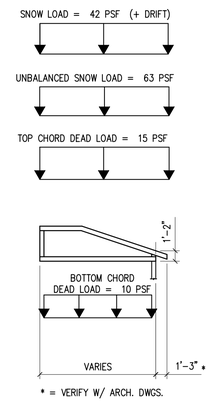


TRUSS DIAGRAM - TRUSS T-13 SCALE: 1/8"=1'-0" 13

TRUSS HOLD-DOWN SCHEDULE

| TRUSS | SIMPSON HOLD-DOWN* | REMARKS |
|---|---|---|
| T-1 | H10 | |
| T-2 | H10 | |
| T-3 | H10 | |
| T-4 | H14 | |
| T-5 | H14 | |
| T-6 | H10 | |
| T-7 | H2.5A | |
| T-8 | H2.5A | |
| T-9 | H2.5 | |
| T-12 | H2.5A | |
| T-13 | H2.5A | |
| GT-1 | (2) H14 | |
| GT-2 | (2) H14 | |
| GT-3 | (2) H14 | ATTACH TO TOP HSS COL. PER 1/S3.3 |
| GT-4 | (2) H14 | ATTACH TO TOP HSS COL. PER 1/S3.3 |
| GT-5 | (2) H10 | |

* OR EQUIVALENT

NOTES:

1. WHERE UPLIFT LOADS DETERMINED BY TRUSS DESIGNER EXCEED CAPACITIES OF SIMPSON HOLD-DOWNS LISTED IN TABLE, USE TRUSS DESIGNER'S RECOMMENDED HOLD-DOWNS.

TRUSS HOLD-DOWN SCHEDULE NTS 14

CASCO BAY ENGINEERING
424 Fore Street
Portland, ME 04101
Phone 207.842.2800
Fax 207.842.2828
www.cascobayengineering.com

CLIENT:
DIDONATO ARCHITECTS, INC.
134 GUINEA ROAD
KENNEBUNKPORT, MAINE

STROUDWATER STATION
1577 CONGRESS STREET PORTLAND, MAINE
PROPOSED BUILDING

REVISIONS

| No. | DATE | ISSUE |
|---|---|---|
| A | 3-19-07 | FOR PERMIT |

SHEET TITLE:
TRUSS DIAGRAMS

| | |
|---|---|
| DESIGNED: | SM |
| DRAWN: | PM |
| DATE: | 2-7-07 |
| CADD FILE: | 7016-S1.DWG |
| PROJECT NUMBER: | 7016 |

S4.1