DOOR SCHEDULE
FIRST FLOOR

DOOR SCHEDULE ABBREVIATIONS

ALUM.	ALUMINUM	MTL	METAL
EXT	EXTERIOR	NO	NUMBER
EHO	ELECTRIC HOLD OPEN'R	P.H.	PANIC H'WR
DR	DOOR	SC	SOLID CORE
FR	FIRE RATED	S. H.	SPRING HINGE
H.C.	HANDICAP	S. LTS.	SIDELITES
INS	INSULATED	TEMP	TEMPERED
LP	LOW PROFILE - 1/2" MAX.	THK	THICKNESS
MAS	MASONITE	WD	WOOD
MIN	MINUTE	WG	WIRE GLASS

ROOM		DOOR						FRAME							
										DETAILS					
NO.	NAME	TYPE	SIZE	THK.	MAT.	GLASS	RATING	MAT.	TYPE	JAMB	HEAD	SILL	RATING	HDW SET	REMARKS
100	LOBBY	D 1	(2) 3'-0 x 6'-8	1 3/4	ALUM.	INS.	-	MT'L	F 1	-	-	H.C. / LP	-	-	INS. ALUM. STORE FRONT, CLOSURE, P.H.
101	ELV. MACH. RM	D 2	3'-0 x 6'-8	1 3/4	ALUM.	-	-	MT'L	F 2	-	-	H.C. / LP	-	-	INSULATED, CLOSURE
102	STAIR 1	D 3	3'-0 x 6'-8	1 3/4	MT'L	TEMP	60 MIN.	MT'L	F 3	-	-	-	60 MIN.	-	CLOSURE, EHO
102A	STAIR 1	D 4	3'-0 x 6'-8	1 3/4	ALUM	INS.	-	MT'L	F 2	-	-	H.C. / LP	-	-	CLOSURE, P.H.
103	CORRIDOR	D 5	(2) 3'-0 x 6'-8	1 3/4	WOOD	-	-	MT'L	F 4	-	-	-	-	-	CLOSURE, P.H.
104	SPRINKLER	D 2	3'-0 x 6'-8	1 3/4	MT'L	-	45 MIN.	MT'L	F 3	-	-	-	45 MIN.	-	CLOSURE
105	INTAKE AREA	D 6	3'-0 x 6'-8	1 3/4	WOOD	-	-	MT'L	F 3	-	-	-	-	-	CLOSURE, P.H.
106	EXAM 1	D 7	3'-0 x 6'-8	1 3/4	WOOD	-	-	MT'L	F 3	-	-	-	-	-	-
107	EXAM 2	D 7	3'-0 x 6'-8	1 3/4	WOOD	-	-	MT'L	F 3	-	-	-	-	-	-
108	EXAM 3	D 7	3'-0 x 6'-8	1 3/4	WOOD	-	-	MT'L	F 3	-	-	-	-	-	-
109	MD	D 7	3'-0 x 6'-8	1 3/4	WOOD	-	-	MT'L	F 3	-	-	-	-	-	-
110	MD & NP	D 7	3'-0 x 6'-8	1 3/4	WOOD	-	-	MT'L	F 3	-	-	-	-	-	-
111	EXAM 4	D 7	3'-0 x 6'-8	1 3/4	WOOD	-	-	MT'L	F 3	-	-	-	-	-	-
112	EXAM 5	D 7	3'-0 x 6'-8	1 3/4	WOOD	-	-	MT'L	F 3	-	-	-	-	-	-
113	EXAM 6	D 7	3'-0 x 6'-8	1 3/4	WOOD	-	-	MT'L	F 3	-	-	-	-	-	-
114	-	-	-	-	-	-	-	-	-	-	-	-	-	-	-
115	PROCEEDURE	D 7	3'-0 x 6'-8	1 3/4	WOOD	-	-	MT'L	F 3	-	-	-	-	-	-
116	EXAM 7	D 7	3'-0 x 6'-8	1 3/4	WOOD	-	-	MT'L	F 3	-	-	-	-	-	-
117	EXAM 8	D 7	3'-0 x 6'-8	1 3/4	WOOD	-	-	MT'L	F 3	-	-	-	-	-	-
118	EXAM 9	D 7	3'-0 x 6'-8	1 3/4	WOOD	-	-	MT'L	F 3	-	-	-	-	-	-
119	MD	D 7	3'-0 x 6'-8	1 3/4	WOOD	-	-	MT'L	F 3	-	-	-	-	-	-
120	CORRIDOR	D 3	3'-0 x 6'-8	1 3/4	MT'L	TEMP.	60 MIN.	MT'L	F 3	-	-	-	60 MIN.	-	CLOSURE, P.H.
120A	STAIR 2	D 4	3'-0 x 6'-8	1 3/4	MT'L	INS.	-	MT'L	F 2	-	-	H.C. / LP	-	-	CLOSURE, P.H.
121	-	-	-	-	-	-	-	-	-	-	-	-	-	-	-
122	EXAM 10	D 7	3'-0 x 6'-8	1 3/4	WOOD	-	-	MT'L	F 3	-	-	-	-	-	-
123	MD	D 7	3'-0 x 6'-8	1 3/4	WOOD	-	-	MT'L	F 3	-	-	-	-	-	-
124	EXAM 11	D 7	3'-0 x 6'-8	1 3/4	WOOD	-	-	MT'L	F 3	-	-	-	-	-	-
125	EXAM 12	D 7	3'-0 x 6'-8	1 3/4	WOOD	-	-	MT'L	F 3	-	-	-	-	-	-
126	NURSE	-	-	-	-	-	-	-	-	-	-	-	-	-	-
127	H.C. PATIENT LAV	D 7	3'-0 x 6'-8	1 3/4	WOOD	-	-	MT'L	F 3	-	-	-	-	-	CLOSURE
128	MED SUPPLIES	D 7	3'-0 x 6'-8	1 3/4	WOOD	-	-	MT'L	F 3	-	-	-	-	-	-
129	TEL / DATA	D 8	(2) 3'-0 x 6'-8	1 3/4	WOOD	-	-	MT'L	F 4	-	-	-	-	-	-
130	MANAGER	D 7	3'-0 x 6'-8	1 3/4	WOOD	-	-	MT'L	F 3	-	-	-	-	-	-
131	CORRIDOR	-	-	-	-	-	-	-	-	-	-	-	-	-	-
132	TESTING	D 7	3'-0 x 6'-8	1 3/4	WOOD	-	-	MT'L	F 3	-	-	-	-	-	-
133	-	-	-	-	-	-	-	-	-	-	-	-	-	-	-
134	SOIL	D 7	3'-0 x 6'-8	1 3/4	WOOD	-	-	MT'L	F 3	-	-	-	-	-	-
135	CLEAN	D 7	3'-0 x 6'-8	1 3/4	WOOD	-	-	MT'L	F 3	-	-	-	-	-	-
136	NURSE	-	-	-	-	-	-	-	-	-	-	-	-	-	-
137	CORRIDOR	-	-	-	-	-	-	-	-	-	-	-	-	-	-
138	COMFORT RM	D 7	3'-0 x 6'-8	1 3/4	WOOD	-	-	MT'L	F 3	-	-	-	-	-	-
139	CORRIDOR	D 7	3'-0 x 6'-8	1 3/4	WOOD	-	-	MT'L	F 3	-	-	-	-	-	CLOSURE
140	TRIAGE	D 7	3'-0 x 6'-8	1 3/4	WOOD	-	-	MT'L	F 3	-	-	-	-	-	-
141	BREAK ROOM	-	-	-	-	-	-	-	-	-	-	-	-	-	-
142	PATIENT RECORDS	-	-	-	-	-	-	-	-	-	-	-	-	-	-
143	MEDICAL RECORDS	-	-	-	-	-	-	-	-	-	-	-	-	-	-
144	RECEPT.	-	-	-	-	-	-	-	-	-	-	-	-	-	-
145	BILLING	-	-	-	-	-	-	-	-	-	-	-	-	-	-
146	JANITOR	D 7	3'-0 x 6'-8	1 3/4	WOOD	-	-	MT'L	F 3	-	-	-	-	-	S.H.
147	STAFF LAV	D 7	3'-0 x 6'-8	1 3/4	WOOD	-	-	MT'L	F 3	-	-	-	-	-	CLOSURE
148	H.C. PATIENT LAV	D 7	3'-0 x 6'-8	1 3/4	WOOD	-	-	MT'L	F 3	-	-	-	-	-	CLOSURE
149	CORRIDOR	-	-	-	-	-	-	-	-	-	-	-	-	-	-
150	COATS	-	-	-	-	-	-	-	-	-	-	-	-	-	-
151	CLOSET	D 9	1'-8 x 6'-8	1 3/4	WOOD	-	-	MT'L	F 5	-	-	-	-	-	-
152	STAIR 3	D 3	3'-0 x 6'-8	1 3/4	METAL	TEMP.	60 MIN.	MT'L	F 2	-	-	-	60 MIN.	-	CLOSURE, P.H.
152A	STAIR 3	D 4	3'-0 x 6'-8	1 3/4	ALUM.	TEMP.	-	MT'L	F 2	-	-	-	-	-	CLOSURE, P.H.
153	-	-	-	-	-	-	-	-	-	-	-	-	-	-	-

DOOR SCHEDULE
SECOND FLOOR

DOOR SCHEDULE ABBREVIATIONS

ALUM.	ALUMINUM	MTL	METAL
EXT	EXTERIOR	NO	NUMBER
EHO	ELECTRIC HOLD OPEN'R	P.H.	PANIC H'WR
DR	DOOR	SC	SOLID CORE
FR	FIRE RATED	S. H.	SPRING HINGE
H.C.	HANDICAP	S. LTS.	SIDELITES
INS	INSULATED	TEMP	TEMPERED
LP	LOW PROFILE - 1/2" MAX.	THK	THICKNESS
MAS	MASONITE	WD	WOOD
MIN	MINUTE	WG	WIRE GLASS

ROOM		DOOR						FRAME							
										DETAILS					
NO.	NAME	TYPE	SIZE	THK.	MAT.	GLASS	RATING	MAT.	TYPE	JAMB	HEAD	SILL	RATING	HDW SET	REMARKS
200	LOBBY	-	-	-	-	-	-	-	-	-	-	-	-	-	-
201	STAIR 1	D 3	3'-0 x 6'-8	1 3/4	MT'L	TEMP	60 MIN.	MT'L	F 3	-	-	-	60 MIN.	-	CLOSURE, EHO, P.H.
202	WAITING	D 10	3'-0 x 6'-8	1 3/4	WOOD	TEMP.	-	MT'L	F 6	-	-	-	-	-	CLOSURE, P.H.
203	SOCIAL WORKER	D 7	3'-0 x 6'-8	1 3/4	WOOD	-	-	MT'L	F 3	-	-	-	-	-	-
204	ELLEN	D 7	3'-0 x 6'-8	1 3/4	WOOD	-	-	MT'L	F 3	-	-	-	-	-	-
205	CORRIDOR	D 3	3'-0 x 6'-8	1 3/4	WOOD	-	-	MT'L	F 3	-	-	-	-	-	CLOSURE
206	NEW OFFICE	D 7	3'-0 x 6'-8	1 3/4	WOOD	-	-	MT'L	F 3	-	-	-	-	-	-
207	VICTORIA	D 7	3'-0 x 6'-8	1 3/4	WOOD	-	-	MT'L	F 3	-	-	-	-	-	-
208	CAROL	D 7	3'-0 x 6'-8	1 3/4	WOOD	-	-	MT'L	F 3	-	-	-	-	-	-
209	ROSE	D 7	3'-0 x 6'-8	1 3/4	WOOD	-	-	MT'L	F 3	-	-	-	-	-	-
210	SARAH	D 7	3'-0 x 6'-8	1 3/4	WOOD	-	-	MT'L	F 3	-	-	-	-	-	-
211	VAL	D 7	3'-0 x 6'-8	1 3/4	WOOD	-	-	MT'L	F 3	-	-	-	-	-	-
212	WENDY	D 7	3'-0 x 6'-8	1 3/4	WOOD	-	-	MT'L	F 3	-	-	-	-	-	-
213	STAIR 2	D 3	3'-0 x 6'-8	1 3/4	MT'L	TEMP	60 MIN.	MT'L	F 3	-	-	-	60 MIN.	-	CLOSURE, P.H.
214	CLOSET	D 7	3'-0 x 6'-8	1 3/4	WOOD	-	-	MT'L	F 3	-	-	-	-	-	-
215	JANITOR	D 7	3'-0 x 6'-8	1 3/4	WOOD	-	-	MT'L	F 3	-	-	-	-	-	-
216	EXAM 5	D 7	3'-0 x 6'-8	1 3/4	WOOD	-	-	MT'L	F 3	-	-	-	-	-	-
217	EXAM 4	D 7	3'-0 x 6'-8	1 3/4	WOOD	-	-	MT'L	F 3	-	-	-	-	-	-
218	CORRIDOR	D 3	3'-0 x 6'-8	1 3/4	WOOD	-	-	MT'L	F 3	-	-	-	-	-	CLOSURE
219	LAV / SHOWER	D 7	3'-0 x 6'-8	1 3/4	WOOD	-	-	MT'L	F 3	-	-	-	-	-	CLOSURE
220	EXAM 6	D 7	3'-0 x 6'-8	1 3/4	WOOD	-	-	MT'L	F 3	-	-	-	-	-	-
221	CORRIDOR	D 3	3'-0 x 6'-8	1 3/4	WOOD	-	-	MT'L	F 3	-	-	-	-	-	CLOSURE, E.H.O., P.H.
222	CLOSET	D 8	(2) 2'-0 x 6'-8	1 3/8	WOOD	-	-	MT'L	F 4	-	-	-	-	-	-
223	CLOSET	D 8	(2) 2'-0 x 6'-8	1 3/8	WOOD	-	-	MT'L	F 4	-	-	-	-	-	-
224	CONFERENCE	D 7	3'-0 x 6'-8	1 3/4	WOOD	-	-	MT'L	F 3	-	-	-	-	-	-
225	EXAM 7	D 7	3'-0 x 6'-8	1 3/4	WOOD	-	-	MT'L	F 3	-	-	-	-	-	-
226	PLAY AREA	-	-	-	-	-	-	-	-	-	-	-	-	-	-
227	CORRIDOR	D 3	3'-0 x 6'-8	1 3/4	WOOD	-	-	MT'L	F 3	-	-	-	-	-	CLOSURE
228	GRETCHEN	D 7	3'-0 x 6'-8	1 3/4	WOOD	-	-	MT'L	F 3	-	-	-	-	-	-
229	NURSE	-	-	-	-	-	-	-	-	-	-	-	-	-	-
230	EXAM 3	D 7	3'-0 x 6'-8	1 3/4	WOOD	-	-	MT'L	F 3	-	-	-	-	-	-
231	FILE AREA	-	-	-	-	-	-	-	-	-	-	-	-	-	-
232	CLOSET	D 7	3'-0 x 6'-8	1 3/4	WOOD	-	-	MT'L	F 3	-	-	-	-	-	-
233	INTAKE	-	-	-	-	-	-	-	-	-	-	-	-	-	-
234	EXAM 2	D 7	3'-0 x 6'-8	1 3/4	WOOD	-	-	MT'L	F 3	-	-	-	-	-	-
235	SOCIAL WORKER	D 7	3'-0 x 6'-8	1 3/4	WOOD	-	-	MT'L	F 3	-	-	-	-	-	-
236	RECEPT.	D 3	3'-0 x 6'-8	1 3/4	WOOD	-	-	MT'L	F 3	-	-	-	-	-	-
237	EXAM 1	D 7	3'-0 x 6'-8	1 3/4	WOOD	-	-	MT'L	F 3	-	-	-	-	-	-
238	H.C. LAV	D 7	3'-0 x 6'-8	1 3/4"	WOOD	-	-	MT'L	F 3	-	-	-	-	-	-
239	CLOSET	D 7	3'-0 x 6'-8	1 3/4"	WOOD	-	-	MT'L	F 3	-	-	-	-	-	-
240	KITCHENETTE	-	-	-	-	-	-	-	-	-	-	-	-	-	-
241	COUNTDOWN AREA	D 10	3'-0 x 6'-8	1 3/4	WOOD	-	-	MT'L	F 6	-	-	-	-	-	CLOSURE, P.H.
242	STAIR 3	D 3	3'-0 x 6'-8	1 3/4	MT'L	TEMP	60 MIN.	MT'L	-	-	-	-	60 MIN.	-	-
243	INTAKE	-	-	-	-	-	-	-	-	-	-	-	-	-	-
244	OFFICE	D 7	3'-0 x 6'-8	1 3/4	WOOD	-	-	MT'L	F 3	-	-	-	-	-	-
245	EXAM 2	D 7	3'-0 x 6'-8	1 3/4	WOOD	-	-	MT'L	F 3	-	-	-	-	-	-
246	EXAM 1	D 7	3'-0 x 6'-8	1 3/4	WOOD	-	-	MT'L	F 3	-	-	-	-	-	-
247	OFFICE	D 7	3'-0 x 6'-8	1 3/4	WOOD	-	-	MT'L	F 3	-	-	-	-	-	-
248	OFFICE	D 7	3'-0 x 6'-8	1 3/4	WOOD	-	-	MT'L	F 3	-	-	-	-	-	-
249	EXTERIOR DECK	D 2 Slm.	3'-0 x 4'-0	1 3/4	MT'L	-	-	MT'L	F 3 Slm.	-	-	YES	-	-	WEATHERSTRIP

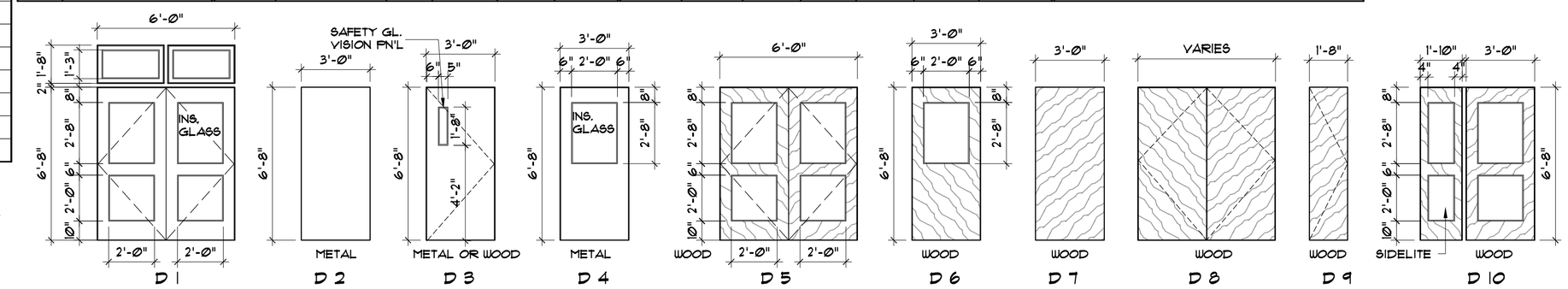

DOOR ELEVATIONS

SCALE: 1/4" = 1'-0"

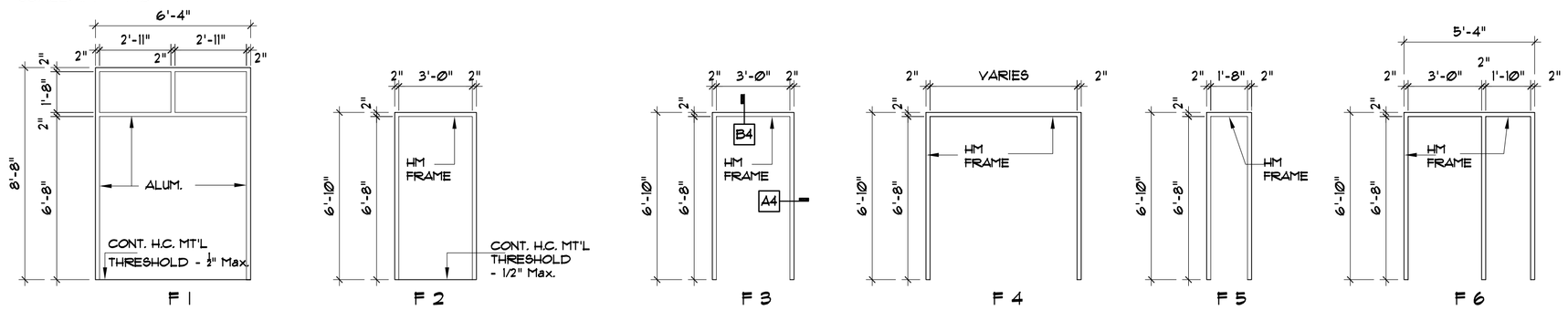

FRAME ELEVATIONS

SCALE: 1/4" = 1'-0"

EXTERIOR WINDOW SCHEDULE

NO.	MODEL	MO	RO
01	CUDH 3028	2'-11 7/8" x 5'-4 5/8"	3'-0 3/8" x 5'-4 7/8"
02	CUDH 3022	2'-11 7/8" x 4'-4 5/8"	3'-0 3/8" x 4'-4 7/8"
03	CUDH 2028	2'-1 7/8" x 5'-4 5/8"	2'-2 3/8" x 5'-4 7/8"
04	CUDH 3028-2	5'-11 1/4" x 5'-4 5/8"	5'-11 3/4" x 5'-4 7/8"

EXTERIOR WINDOW SPECS:

MANUFACTURED BY: MARVIN WINDOWS
CONTACT: BRAD ARMSTRONG
MARVIN WINDOW STORE - HANCOCK LUMBER COMPANY
phone: 800-938-6711, cell: 207-749-8940

1. CLAD ULTIMATE DOUBLE HUNG
2. INSULATED GLASS: IG
3. LOW E 2 W/ ARGON
4. SIMULATED DIVIDED LITE: 4/1 LITES 7/8" RECTANGULAR, W/ SPACER BAR. WINEBERRY CLAD EXTERIOR PRIMED PINE INTRIOR
5. WHITE SASH LOCK
6. WHITE JAMB HARDWARE.
7. HALF SCREEN - WINEBERRY SURROUND. CHARCOAL FIBERGLASS MESH.
8. NAILING FIN.
11. PRIMED PINE INTERIOR.
12. WINEBERRY CLAD EXTERIOR.
13. STATIONARY SASH FILLER KIT.
14. SASH LIMITER.
15. NO CASING.
16. 4 9/16" JAMB

DOORS NOTES:

1. BIRCH FLUSH SOLID DOORS - CLEAR FINISH.
2. WELDED STEEL DOOR FRAMES - PAINTED
3. ALL DOORS SHALL HAVE LEVER HANDLES.
4. ALL HARDWARE SHALL COMPLY WITH A.D.A. REQUIREMENTS AND STANDARDS.

REGISTERED ARCHITECT
JOSEPH F. DIDONATO
No.2124
STATE OF MAINE

NO.	DATE:	REVISIONS

DIDONATO ARCHITECTS, INC.
134 GUINEA ROAD, KENNEBUNKPORT, ME. 04046
phone:(207) 286-2900 fax: (207) 283-4895
"E" Mail address: jfdidonato@adelphia.net
www.didonatoarchitects.com

Project: Stroudwater Station
1577 Congress Street Portland, Maine

Owner: 1577 Congress Street Assoc. LLC
P.O. Box 7022 Scarborough, Maine

DRAWINGS THIS SHEET: SCHEDULES WINDOW & DOOR

DATE: 04/03/07
REVISION DATE:
DRAWN BY: JFD

SHEET: A7

OF -

© COPYRIGHT
REPRODUCTION OR REUSE OF THIS DOCUMENT WITHOUT WRITTEN PERMISSION OF DIDONATO ARCHITECTS IS PROHIBITED