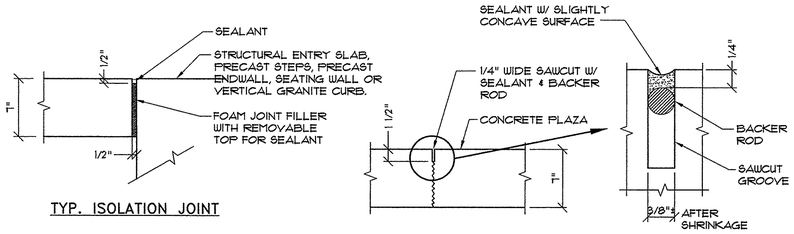

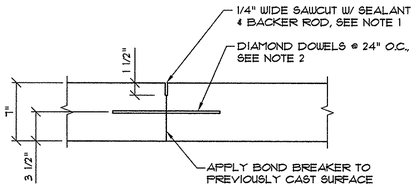

NOTES:
1. MAKE SAWCUT AFTER SHRINKAGE CRACK FORMS AT SLAB SURFACE. FOLLOW CRACK WITH SAWCUT.
2. DIAMOND DOWELS FOR CONSTRUCTION JOINTS: DIAMOND DOWEL SYSTEM BY P.N.A. INC., INCLUDING 3/8" x 4 1/2" x 4 1/2" STAINLESS STEEL PLATES WITH PLASTIC BASES AND SLEEVES. INSTALL SLEEVES PARALLEL TO THE SLAB SURFACE AT SPACINGS INDICATED ON THE DRAWINGS AND IN ACCORDANCE WITH MANUFACTURER'S INSTRUCTIONS.

CONSTRUCTION JOINT DETAIL

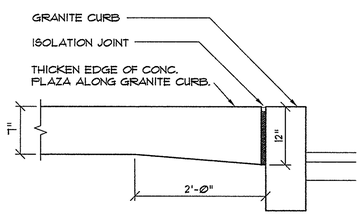

TYP. THICKENED EDGE AT CURB

6 SITE CONCRETE JOINTS

NOT TO SCALE

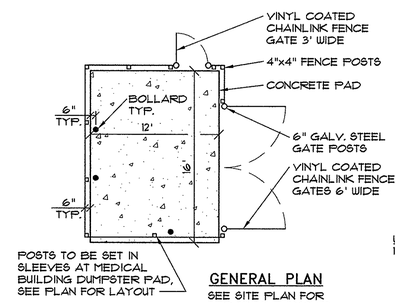

GENERAL PLAN

SEE SITE PLAN FOR INDIVIDUAL LAYOUTS

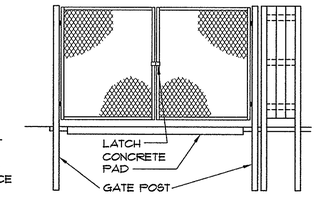

CHAINLINK GATES

WOOD NOTES:
1. ALL WOOD TO BE PRESSURE TREATED TO A MIN. NET OF 40 lbs. CCA PER CUBIC FOOT OF WOOD AND EACH PIECE SHALL BEAR THE AMERICAN WOOD PRESERVER'S ASSOCIATES QUALITY MARK LP-22 "GROUND CONTACT USE."
2. ALL NAILS AND SCREWS TO BE GALVANIZED.

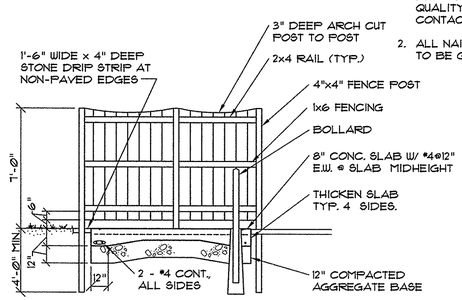

SECTION

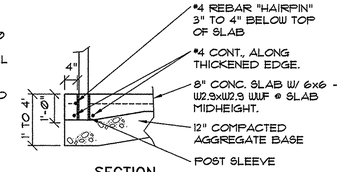

SECTION

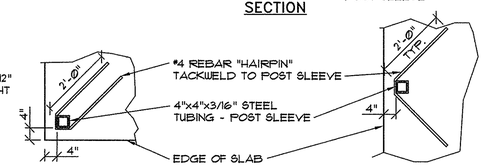

PLAN VIEW – CORNER POST SLEEVE

PLAN VIEW – INTERMEDIATE POST SLEEVE

POST SLEEVE DETAILS

REQUIRED AT MEDICAL BUILDING DUMPSTER PAD

1 DUMPSTER ENCLOSURE DETAIL

NOT TO SCALE

GENERAL NOTES FOR SITE CONCRETE

1. CONCRETE MIXTURE:

   MIX PROPORTIONS AND DESIGN: PROPORTION MIXES COMPLYING WITH MIX DESIGN PROCEDURES SPECIFIED IN ACI 301.

   MAX. WATER - CEMENTITIOUS MATERIALS RATIO 0.50
   MIN. CEMENT CONTENT 564 LBS/CY.
   AIR CONTENT: 6%± 1%
   MINIMUM 28-DAY COMPRESSIVE STRENGTH: 4000 PSI
   MAXIMUM AGGREGATE SIZE: 3/4"

   SLUMP:
   CONCRETE FOR GENERAL USE: 4"± 1"
   CONCRETE WITH HRWR ADMIXTURE: NOT MORE THAN 8"

   MINIMUM CONCRETE COVER:
   3" FOR CONCRETE CAST AGAINST SOIL.
   2" FOR OTHER CONCRETE UNLESS SHOWN OTHERWISE

   SLAB FINISH: PROVIDE A BROOM FINISH. A TROWEL FINISH IS NOT DESIRED, NO MACHINE FLOATING OR TROWELING IS PERMITTED.

   CURING: PROVIDE 7-DAY WET CURE BY COVERING SLAB WITH CURING COVER SHEETS WITH ALL JOINTS AND PERIMETER LAPPED AND TAPED. DO NOT ADD WATER FOR CURING. BEGIN CURING AS SOON AS POSSIBLE AFTER FINISHING OPERATIONS AND JOINT CUTTING ARE COMPLETE. REPAIR ANY DAMAGE TO SHEETS IMMEDIATELY. INSTALL SHEETS AND SEAL JOINTS IN ACCORDANCE WITH MANUFACTURER'S INSTRUCTIONS.

   PENETRATING SEALER: APPLY PENETRATING SEALER AT MANUFACTURER'S RECOMMENDED RATE AND IN ACCORDANCE WITH MANUFACTURER'S INSTRUCTIONS. OBSERVE MANUFACTURER'S RECOMMENDED WAITING PERIOD FOLLOWING CONCRETE PLACEMENT & CURING BEFORE APPLYING SEALER.

2. PROVIDE THE FOLLOWING MATERIALS. SUBMIT PRODUCT DATA FOR EACH ITEM FOR REVIEW BY ENGINEER.

   REINFORCING BARS: ASTM A615, GRADE 60
   WELDED WIRE FABRIC: ASTM A185

   CURING COVER: WHITE SYNTHETIC FIBER MAT WITH BONDED WHITE, POLYETHYLENE SHEET EQUIVALENT TO TRANSGUARD 4000 BY REEF INDUSTRIES, INC.

   JOINT SEALANT: TWO-PART POLYURETHANE SEALANT EQUIVALENT TO SONOLASTIC SL-2. CLEAN AND PRIME JOINT AND INSTALL SEALANT IN ACCORDANCE WITH MANUFACTURER'S INSTRUCTIONS.

   FOAM JOINT FILLER: 15 LB. DENSITY POLYETHYLENE FOAM WITH REMOVABLE CAP ON TOP FOR SEALANT RESERVOIR.

   PENETRATING SEALER: WATER BASED SILANE/SILOXANE CHLORIDE SCREEN EQUIVALENT TO SALTGUARD WB BY PROSOCO, INC.

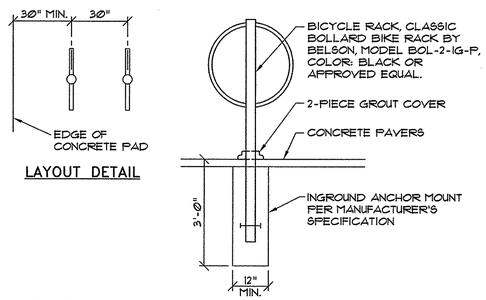

4 BIKE RACK DETAIL

NOT TO SCALE

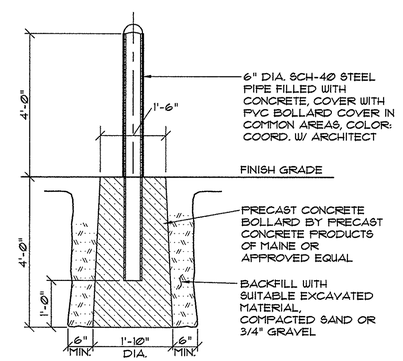

2 STEEL BOLLARD DETAIL

NOT TO SCALE

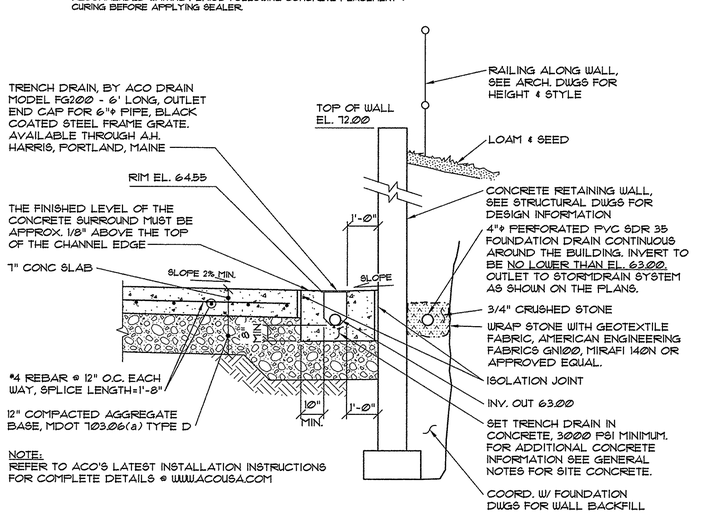

NOTE:
REFER TO ACO'S LATEST INSTALLATION INSTRUCTIONS FOR COMPLETE DETAILS @ WWW.ACOUSA.COM

7 TRENCH DRAIN & RETAINING WALL SECTION

NOT TO SCALE

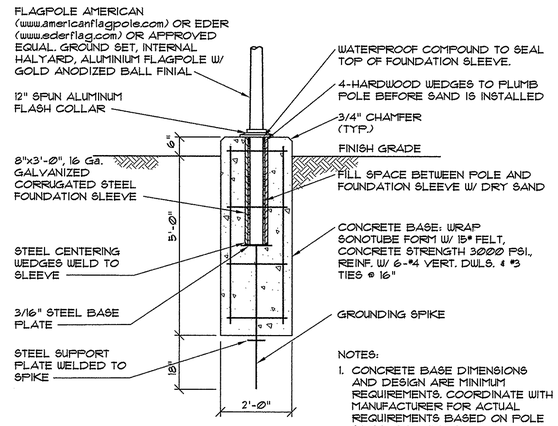

NOTES:
1. CONCRETE BASE DIMENSIONS AND DESIGN ARE MINIMUM REQUIREMENTS. COORDINATE WITH MANUFACTURER FOR ACTUAL REQUIREMENTS BASED ON POLE STYLE AND HEIGHT.

5 FLAGPOLE BASE DETAIL

NOT TO SCALE

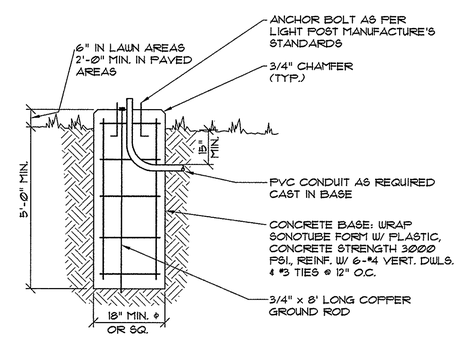

3 LIGHT POLE BASE DETAIL

NOT TO SCALE

UTILITY NOTES

1. ALL INSTALLATION AND TESTING SHALL BE IN ACCORDANCE WITH THE AFFECTED UTILITY'S STANDARDS.
2. CATCHBASINS AT THE EDGE OF PAVEMENT OR FACE OF CURB, ROTATE ECCENTRIC CONE OR FLAT COVER AS REQUIRED FOR BEST FIT.
3. INSTALL AND TEST SEWER AND STORM DRAIN SYSTEMS IN ACCORDANCE WITH THE CITY'S ORDINANCES. TESTING SANITARY SEWER PIPE AND MANHOLES IS REQUIRED.
   PIPE: LOW PRESSURE AIR (5PSIG) FOR 5 MINUTES.
   STRUCTURES: VACUUM TEST, XX MM LTG FOR XX MINUTES PRIOR TO BUILDING INVERT OR CHIMNEY.
4. INSTALL ALL PIPES WITH THE BELLS UPGRADIENT.
5. INVERTS FOR TIE-INS FROM FOUNDATION DRAINS ARE NOT SHOWN. MAINTAIN A POSITIVE SLOPE TO CONNECTION OR OUTLET. COMPLY WITH LOCAL ORDINANCES OR STANDARDS WITH RESPECT TO CONNECTING FOUNDATION DRAINS TO STORM DRAIN SYSTEM.
6. WATER MAIN TO HAVE A MINIMUM 5.5' OF COVER. WHERE THE WATER MAIN CROSSES OTHER UTILITIES IT MAY NEED TO BE DEEPER.
7. INSULATION FOR SEWER AND CULVERT CROSSINGS:

   A. INSULATION TO BE STYROFOAM SM INSULATION AS MANUFACTURED BY DOW CHEMICAL CO., OR APPROVED EQUAL, 2" MIN. THICKNESS.

   B. INSTALL BETWEEN SEWER OR FORCEMAIN PIPE AND CULVERTS WHERE THEY ARE WITHIN 18" OF EACH OTHER VERTICALLY: 2" THICK x 4' WIDE, EXTEND INSULATION 6' EACH SIDE OF THE CULVERT ALONG THE CROSSING PIPE.

   C. INSTALL OVER SEWER OR FORCEMAIN PIPE WHERE THERE IS LESS THAN 4' OF COVER BETWEEN THE TOP OF PIPE AND FINISH GRADE: 2" THICK x 4' WIDE CENTERED ON THE PIPE, 6" ABOVE THE PIPE.

   D. FOR DUAL PIPES EXTEND INSULATION AT LEAST 2 FEET BEYOND THE OUTER EDGES OF PIPES.
8. PRECAST CATCH BASIN COMPONENTS TO COMPLY WITH ASTM C478.
9. LIMIT OF ROCK PAYMENT:

   PRECAST CONCRETE STRUCTURES:
   DEPTH: 12" BELOW STRUCTURE,
   WIDTH: STRUCTURE O.D. + 2'

   TRENCHES:
   DEPTH: 6" BELOW PIPE OR CABLE INVERT,
   WIDTH: PIPE O.D. OR CABLE + 12", MIN. 3' WIDE

   LIGHTPOLE BASE:
   LIMIT OF CONCRETE BASE

   PAVED SURFACES:
   BOTTOM OF SUBBASE RELATIVE TO FINISH SURFACE
10. IDENTIFICATION TAPE TO BE INSTALLED ABOVE ALL NEW UNDERGROUND UTILITIES AND ABOVE ANY EXISTING UTILITIES THAT MAY BE EXPOSED BY THIS CONSTRUCTION.

    DETECTABLE UNDERGROUND MARKING TAPE TO BE PERMANENT, BRIGHT-COLORED, CONTINUOUS-PRINTED PLASTICIZED ALUMINUM TAPE, INTENDED FOR DIRECT-BURIAL SERVICE NOT LESS THAN 3" WIDE x 5 MILS THICK. PROVIDE TAPE WITH BLACK PRINTING IDENTIFYING THE UTILITY. DETECTABLE WARNING TAPE REQUIRED OVER ALL WATER, SEWER, DRAINAGE, OR GAS UTILITIES. TAPE TO BE TERRA TAPE BY REEF INDUSTRIES, INC., www.reefindustries.com, OR EQUAL.

    APWA UNIFORM COLOR CODE:

WHITE	PROPOSED EXCAVATION
PINK	TEMPORARY SURVEY MARKINGS
RED	ELECTRIC POWER LINES, CABLES, CONDUIT AND LIGHTING CABLES
YELLOW	GAS, OIL, STEAM, PETROLEUM OR GASEOUS MATERIALS
ORANGE	COMMUNICATION, ALARM OR SIGNAL LINES, CABLES OR CONDUIT
BLUE	POTABLE WATER
PURPLE	RECLAIMED WATER, IRRIGATION AND SLURRY LINES
GREEN	SEWERS AND DRAIN LINES

11. MATERIALS: SEE PLANS FOR SIZES

STORM DRAIN:	
TYPICAL:	PE N12, SMOOTH WALL
WITHIN R.O.W. OF STATE ROAD:	REINFORCED CONCRETE PIPE
UNDERDRAIN: MEETING AASHTO H-20 LOADING	PERFORATED PE N12
SANITARY SEWER: MEETING ASTM D3034 W/ A REMOVABLE GASKET MEETING ASTM D3212	PVC, SDR 35
FORCEMAIN:	PVC, SDR 11
WATER MAIN:	CEMENT LINED DUCTILE IRON CLASS 52
WATER SERVICE:	CTS 200 PSI, PE
FOUNDATION DRAIN: MEETING AASHTO H-20 LOADING COORD. WITH STRUCTURAL FOR CONNECTION WITHIN 8' OF FOUNDATION	PERFORATED PE N12

PINKHAM & GREER
CIVIL ENGINEERS
28 WARREN AVE, PORTLAND, ME 04103
TEL: 207.797.8242 FAX: 207.797.4245

STATE OF MAINE
THOMAS GREER
No. 4206
LICENSED
PROFESSIONAL ENGINEER
12/12/16

REV.	DATE	DESCRIPTION
2	12/12/16	ADDED LOADING DOCK & CONCRETE DETAILS
1	8/25/16	REV'D PER CITY REVIEW COMMENTS

NORTHLAND ENTERPRISES, LLC
17 SOUTH STREET
PORTLAND, MAINE 04101

SCALE: AS SHOWN
DATE: JUNE 17, 2016
PROJECT: 13151
DRN BY: RJS
DESG BY: TSG
CHK BY: TSG

1945 CONGRESS STREET
ELKS LODGE, PORTLAND, MAINE

DETAILS

C2.5

MAP/LOT 216-A-6 & 217-A-1