DEVICE MOUNTING HEIGHT REFERENCE (PER NFPA 72)

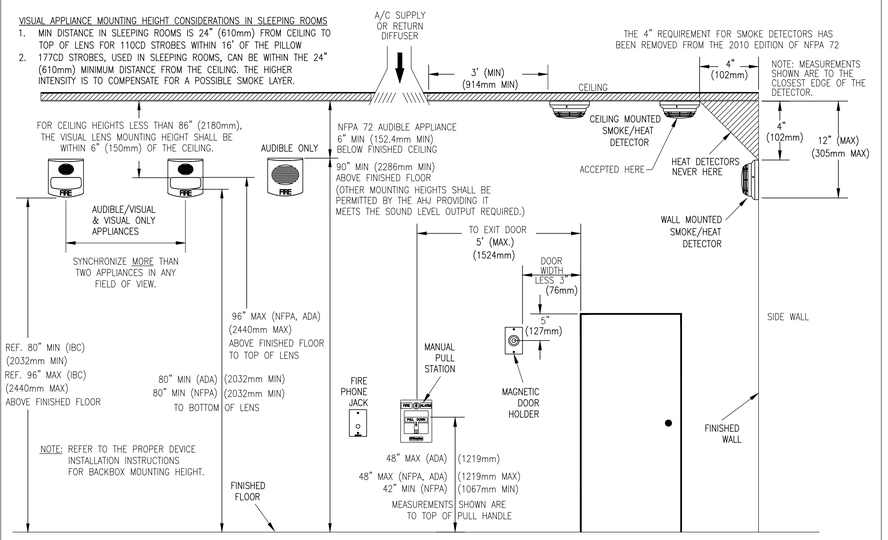

4009 NAC PANEL, TYPICAL WIRING DETAIL

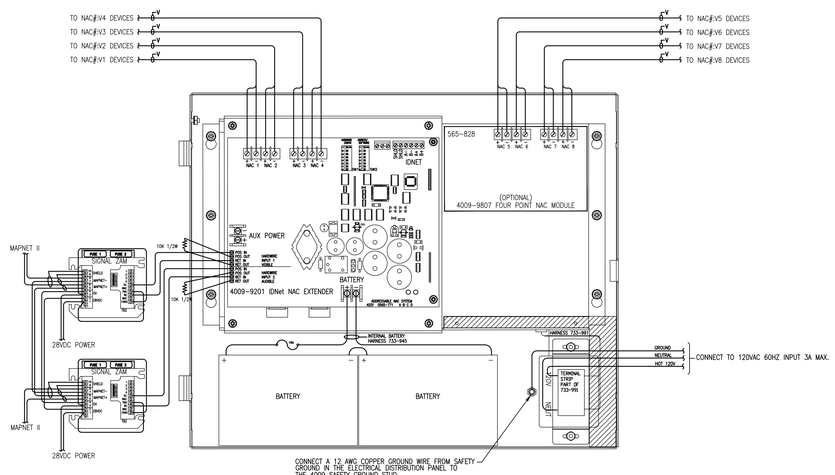

4098-9792 STANDARD SENSOR BASE

PRODUCT INFORMATION

FEATURES:
- UL LISTED, FM APPROVED
- TRUEALARM ANALOG SENSING PROVIDES DIGITAL TRANSMISSION OF ANALOG SENSOR VALUES VIA MAPNET II, OR IDNet SLC TWO WIRE COMMUNICATIONS
- FIRE ALARM CONTROL PANEL PROVIDES:
  - –INDIVIDUAL SENSITIVITY SELECTION FOR EACH SENSOR
  - –PEAK VALUE LOGGING ALLOWING ACCURATE ANALYSIS FOR SENSITIVITY SELECTION
  - –AUTOMATIC ENVIRONMENTAL COMPENSATION
  - –DISPLAY OF SENSITIVITY IN PERCENT PER FOOT
  - –MULTISTAGE ALARM OPERATION
  - –ABILITY TO DISPLAY AND PRINT DETAILED SENSOR INFORMATION IN PLAIN ENGLISH LANGUAGE
- PHOTOELECTRIC SMOKE SENSOR 4098–9714:
  - SEVEN LEVELS OF SENSITIVITY FROM 0.2% TO 3.7%
- IONIZATION SMOKE SENSOR 4098–9717:
  - FOUR LEVELS OF SENSITIVITY FROM 0.5% TO 1.7%.
- HEAT SENSOR 4098–9733:
  - –RATE–OF–RISE TEMPERATURE DETECTION IS SELECTABLE AT THE CONTROL PANEL FOR EITHER 15°F OR 20°F PER MINUTE
  - –FIXED TEMPERATURE SENSING IS INDEPENDENT OF RATE–OF–RISE AND PROGRAMMABLE TO OPERATE AT 135°F OR 155°F
  - –TRUEALARM HEAT SENSORS CAN BE PROGRAMMED AS A UTILITY DEVICE TO MONITOR FOR TEMPERATURE EXTREMES IN THE RANGE FROM 32° F TO 120° F.
- UL STANDARD SPACING:
  - –60 FT SPACING FOR 135° F
  - –40 FT SPACING FOR 155° F
- INTERNAL RED LED FOR POWER–ON (PULSING), OR ALARM OR TROUBLE (STEADY ON)
- BASE MOUNTED ADDRESS SELECTION:
  - –ACCESSIBLE FROM FRONT (DIP SWITCH UNDER SENSOR)
  - –ADDRESS REMAINS WITH ITS PROGRAMMED LOCATION
- FOR USE WITH SIMPLEX 4010, 4100, 4020, AND 4120 SERIES CONTROL PANELS.
- MAXIMUM QUANTITY OF DEVICES:
  - –127 FOR 4020, 4100, 4120
  - –250 FOR 4010, 4100
- MOUNTING: CEILING OR WALL
- COLOR : FROST WHITE
- BASE DIMENSIONS: 15/16" X 4–7/8"

SPECIFICATIONS:
- UL LISTED TEMPERATURE RANGE: 32°F TO 100°F
- OPERATING TEMPERATURE RANGE: 32°F TO 120°F
- HUMIDITY RANGE: 10% TO 95% RH
- PHOTOELECTRIC SENSOR AIR VELOCITY RANGE: 0–2000 FT/MIN
- IONIZATION SENSOR AIR VELOCITY RANGE: 0–300 FT/MIN
- WIRING CONNECTIONS: SCREW TERMINALS FOR IN/OUT WIRING, #18 TO #14 AWG
- COMMUNICATIONS MAPNET II/IDNet SLC: 1 ADDRESS PER BASE
  VOLTAGE (MAPNET II/IDNet SLC): 24–40VDC
  CURRENT: 400uA TYPICAL

DESCRIPTION:
TRUEALARM SENSOR BASES CONTAIN INTEGRAL ADDRESSABLE ELECTRONICS. THAT CONSTANTLY MONITOR THE STATUS OF THE DETACHABLE PHOTOELECTRIC, IONIZATION, OR HEAT SENSORS. EACH SENSOR'S OUTPUT IS DIGITIZED AND TRANSMITTED TO THE SYSTEM FIRE ALARM CONTROL PANEL EVERY FOUR SECONDS. SINCE TRUEALARM SENSORS USE THE SAME BASE, DIFFERENT SENSOR TYPES CAN BE EASILY INTERCHANGED TO MEET SPECIFIC LOCATION REQUIREMENTS. THIS FEATURE ALLOWS INTENTIONAL SENSOR SUBSTITUTION DURING BUILDING CONSTRUCTION, WHEN CONDITIONS ARE TEMPORARILY DUSTY, INSTEAD OF COVERING THE SMOKE SENSORS. HEAT SENSORS MAY BE INSTALLED WITHOUT REPROGRAMMING THE CONTROL PANEL. ALTHOUGH THE CONTROL PANEL WILL INDICATE AN INCORRECT SENSOR TYPE, THE HEAT SENSOR WILL OPERATE AS A DEFAULT SENSITIVITY PROVIDING HEAT DETECTION FOR BUILDING PROTECTION AT THAT LOCATION.

WIRING:
1. ALL WIRING TO COMPLY WITH LOCAL CODE.
2. CONDUCTORS MUST TEST FREE OF ALL GROUNDS.
3. MAINTAIN CORRECT POLARITY
4. MAPNET II/IDNet SLC WIRING TO BE #18 AWG TWISTED SHIELDED PAIR
5. IF SHIELD IS PRESENT, CONNECT TO THE OUTGOING IDNet SLC SHIELD TO PROVIDE A CONTINUOUS SHIELD OVER THE LENGTH OF THE IDNet SLC CHANNEL. METHOD OF SPLICE DETERMINED BY AHJ.
6. REFER TO INSTALLATION INSTRUCTIONS (574–707)
7. REFER TO APPLICATION MANUAL (574–709)

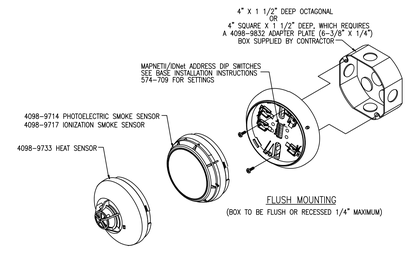

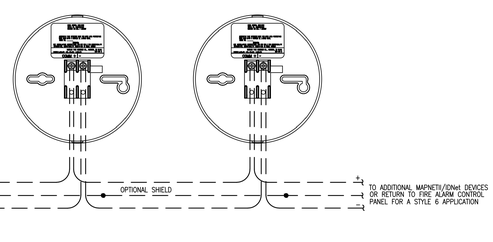

4100ES BACKBOX INSTALLATION

INSTRUCTIONS

1. REMOVE ELECTRONIC CARD CAGE (IF PRESENT) AND STORE IT IN A SAFE DRY AREA.
2. NO KNOCKOUTS PROVIDED. CUT CONDUIT/SERVICE ENTRANCE OPENINGS. REFER TO FIG.1 FOR PROPER LOCATIONS. CONDUIT PROTRUSION INTO BOX 1/2" MAX.
3. MOUNT BOX TO WALL: BOX MUST BE LEVEL AND PLUMB. FOR SURFACE MOUNT USE TEAR DROP AND CLEARANCE HOLES ON BACK SURFACE. FOR SEMI–FLUSH MOUNT: USE WALL STUD GUIDES FOR MAXIMUM ALLOWABLE BOX DEPTH TO PROVIDE OPEN DOOR CLEARANCE. USE KNOCKOUTS ON SIDE WALL, SCREW OR NAIL BOX TO WALL STUDS.
4. MINIMUM DISTANCE BETWEEN ANY TWO BOXES IS 3 1/4" (6" MAXIMUM).
5. IF PRESENT, USE WIRE MANAGEMENT BRACKETS ON BOX SIDES TO SECURE WIRE RUNS.
6. NEMA RATING: NEMA 1 – GENERAL PURPOSE.
7. DO NOT LOCATE POWER–LIMITED WIRING IN THE SHADED AREAS OF THE BACKBOX, THIS AREA IS RESERVED FOR NON–POWER LIMITED CIRCUITRY SUCH AS AC POWER, BATTERIES AND CITY CONNECTION.
8. REFER TO SIMPLEX BACKBOX INSTALLATION DOCUMENT 579–117 FOR DETAILED INSTRUCTIONS.

NOTE: ADA REQUIREMENTS LIMIT THE ALLOWABLE PROTRUSION OF OBJECTS MOUNTED IN PUBLIC ACCESSIBLE WALKS, HALLS, CORRIDORS, PASSAGEWAYS OR AISLES. THE 4 INCH (100mm) RESTRICTION APPLIES TO ANY ITEM IN WHICH THE MEASUREMENT FROM THE FLOOR TO THE BOTTOM OF THE UNIT IS MORE THAN 27 INCHES.

PKG. SIZE	PID NUMBER	BOX HEIGHT
1 BAY	2975–9407	22"
2 BAY	2975–9408	40"
3 BAY	2975–9409	56"
1 BAY	2975–9410	22"
2 BAY	2975–9411	40"
3 BAY	2975–9412	56"
1 BAY	2975–9438	22"
2 BAY	2975–9439	40"
3 BAY	2975–9440	56"

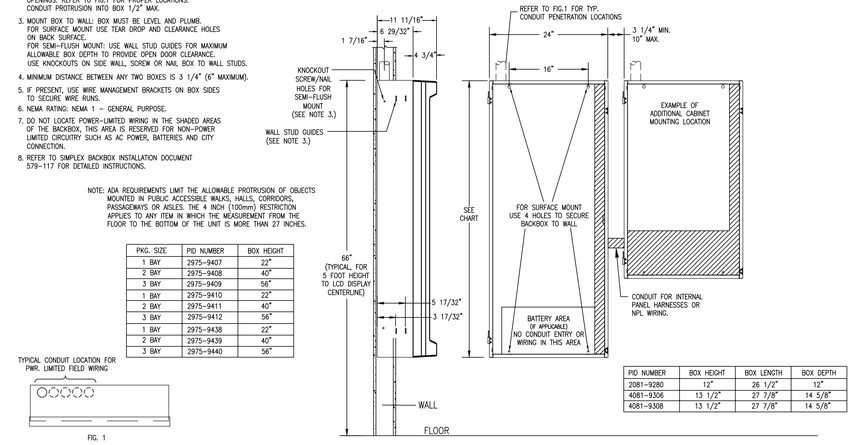

PID NUMBER	BOX HEIGHT	BOX LENGTH	BOX DEPTH
2081–9280	12"	26 1/2"	12"
4081–9306	13 1/2"	27 7/8"	14 5/8"
4081–9308	13 1/2"	27 7/8"	14 5/8"

4099–9006 IDNet SLC DOUBLE ACTION PUSH MANUAL STATION

PRODUCT INFORMATION

FEATURES:
- UL LISTED
- DOUBLE ACTION (PUSH/PULL), IDNet SLC ADDRESSABLE
- PULL LEVEL PROTRUDES WHEN ALARMED
- LED INDICATOR FLASHES DURING COMMUNICATION
- TAMPER RESISTANT RESET KEY LOCK
- MOUNTING: SEMI–FLUSH, SURFACE
- OPERATING TEMPERATURE RANGE: 32 – 120° F
- OPERATING HUMIDITY RANGE: 0 – 93% RH
- ADAPTER PLATES 2099–9813 OR 2099–9814 CAN BE USE FOR RETROFIT APPLICATIONS.
- 5" HIGH X 3 3/4" WIDE X 1" DEEP
- SCREW TERMINALS FOR 18 TO 14 AWG WIRE
- ADDRESSED BY MEANS OF AN 8 POSITION DIP SWITCH
- COMPATIBLE WITH IDNet SLC/MAPNET

OPERATION:
ACTIVATION:
4099–9006 DOUBLE ACTION STATION REQUIRES A FIRM DOWNWARD PULL TO ACTIVATE THE ALARM SWITCH. COMPLETING THIS ACTION BREAKS AN INTERNAL PLASTIC BREAK–ROD THAT IS VISIBLE BELOW THE PULL LEVER (USE OF PLASTIC ROD IS OPTIONAL). THE PULL LEVEL LATCHES INTO THE ALARM POSITION AND REMAINS EXTENDED OUT OF THE HOUSING TO PROVIDE A VISIBLE INDICATION.

RESETTING:
4099–9006 DOUBLE ACTION STATION REQUIRES A KEY TO RESET THE ACTIVATION LEVER AND DEACTIVATE THE ALARM SWITCH. (IF OPTIONAL PLASTIC BREAK ROD WAS USED IT MUST BE REPLACED)

CONSTRUCTION:
STATION HOUSING AND PULL LEVER ARE CONSTRUCTED OF CHIP RESISTANT AND DIRT RESISTANT, HIGH IMPACT LEXAN. HOUSING IS RED WITH RAISED WHITE LETTERING AND PULL LEVER IS WHITE WITH RED RAISED LETTERING.
* LEXAN IS A REGISTERED TRADEMARK OF THE GENERAL ELECTRIC CO.

APPLICATION:
PULL STATIONS SHALL BE INSTALLED IN ACCORDANCE WITH NFPA 72 AND ADA GUIDE LINES.

INTRODUCTION:
THE 4099–9006 ADDRESSABLE PULL STATION PROVIDES TWO–STATE STATUS INFORMATION (NORMAL AND SHORT) TO THE IDNet SLC COMPATIBLE FIRE ALARM CONTROL PANEL (FACP) VIA THE IDNet SLC CHANNEL. THE IDNet SLC CHANNEL PROVIDES THE COMMUNICATION LINK BETWEEN PULL STATION AND THE FACP AND POWERS THE ENTIRE CIRCUITRY.

WIRING:
1. ALL WIRING TO COMPLY WITH LOCAL CODE.
2. CONDUCTORS MUST TEST FREE OF ALL GROUNDS.
3. MAINTAIN CORRECT POLARITY
4. IDNet SLC LINES ARE TO BE 18 AWG TWISTED SHIELDED PAIR
5. MAXIMUM LINE RUN FROM PANEL TO FARTHEST DEVICE NOT TO EXCEED 2500 FEET.
6. MAXIMUM TOTAL WIRE (INCLUDING ALL T–TAPS) FROM PANEL NOT TO EXCEED 10,000 FEET.
7. MAXIMUM QUANTITY OF DEVICES PER CIRCUIT: 250
8. TERMINALS 1 AND 2 FOR FIELD WIRING. TERMINALS 3 AND 4 ARE FACTORY WIRING.
9. WIRE NUT, SPLICE, OR SOLDER THE SHIELD WIRES.
10. IF SHIELD IS PRESENT, IT SHOULD BE CONNECTED TO THE OUTGOING IDNet SHIELD TO PROVIDE A CONTINUOUS SHIELD OVER THE LENGTH OF THE IDNet SLC CHANNEL. SHIELD SHOULD BE INSULATED FROM THE ELECTRICAL BOX.
11. SEE INSTALLATION INSTRUCTIONS 574–332

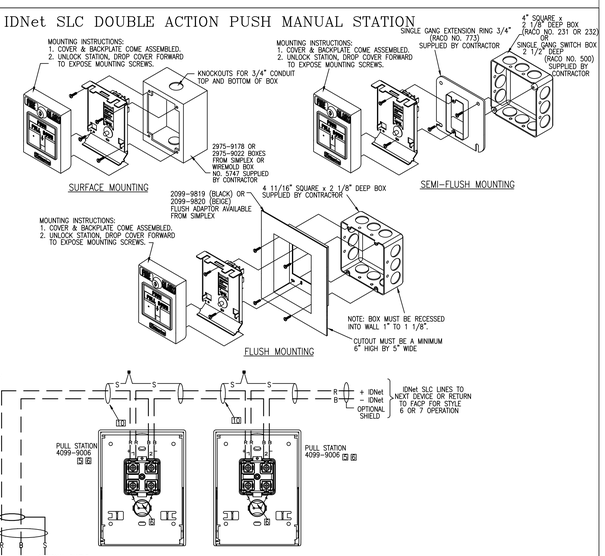

4090–9008 IDNet/MAPNET II SLC, DUAL RELAY, ADDRESSABLE OUTPUT MODULE (AOM)

PRODUCT INFORMATION

FEATURES:
- UL LISTED
- A SINGLE ADDRESSABLE POINT BOTH CONTROLS TWO 2A FORM "C" CONTACT AND TRACKS ITS STATUS
- COMPATIBLE WITH SIMPLEX MODEL 4010 AND 4100 ADDRESSABLE FIRE ALARM CONTROL PANEL
- LATCHING RELAY DESIGN ALLOWS DATA AND POWER TO BE BOTH SUPPLIED BY IDNet/MAPNET II SLC COMMUNICATIONS
- COMPACT, SEALED CONSTRUCTION:
  - – SCREW TERMINALS FOR WIRING CONNECTIONS
  - – REDUCES DUST INFILTRATION

SPECIFICATIONS:
- RELAY AOM POWER: SUPPLIED BY IDNet/MAPNET II SLC COMMUNICATIONS
- RELAY AOM CONTACTS (FORM "C", SPDT)
- POWER LIMITED RATING: 2A @ 24VDC, TRANSIENT SUPPRESSED LOADS, 1A @ 24VDC FOR INDUCTIVE LOADS
- NON POWER LIMITED RATING: 1/2A @ 24VAC, TRANSIENT SUPPRESSED LOADS, 1A @ 24 VDC FOR INDUCTIVE LOADS
- WIRE CONNECTIONS: SCREW TERMINALS FOR IN/OUT WIRING, #18 TO #14 AWG WIRE
- COMPATIBLE WITH SIMPLEX 2081–9044 OVER VOLTAGE PROTECTORS
- DIMENSIONS: 4 1/8"H x 4 1/8"W x 1 3/8"D (105mm x 105mm x 35mm)
- HOUSING MATERIAL: BLACK THERMOPLASTIC
- MOUNTING PLATE MATERIAL: SHEET METAL, GALVANIZED
- TEMPERATURE RANGE: 32° F TO 120° F (0° C TO 49° C) INTENDED FOR INDOOR OPERATION
- HUMIDITY RANGE UP TO 93% RH AT 100° F (38° C)

DESCRIPTION:
IDNet/MAPNET II SLC RELAY MODULES ALLOW THE SIMPLEX FIRE ALARM CONTROL PANEL TO CONTROL A REMOTELY LOCATED FORM "C" CONTACT USING IDNet/MAPNET II ADDRESSABLE SLC COMMUNICATIONS FOR BOTH DATA AND POWER. TYPICAL APPLICATIONS WOULD BE FOR SWITCHING LOCAL POWER FOR CONTROL FUNCTIONS SUCH AS ELEVATOR CAPTURE, OR CONTROL OF HVAC COMPONENTS, PRESSURIZATION FANS, DAMPERS, ETC. RELAY STATUS IS ALSO COMMUNICATED REQUIRING ONLY ONE DEVICE ADDRESS.

WIRING NOTES:
1. IDNet/MAPNET II SLC LINES ARE TO BE #18 AWG TWISTED PAIR (CONSULT SG SALES ENGINEERING FOR EXCEPTIONS) SHIELD RECOMMENDED.
2. MAXIMUM ALLOWABLE LINE RUN, FROM THE F.A.C.P. TO THE FARTHEST DEVICE, NOT TO EXCEED 2500 FEET.
3. MAXIMUM QUANTITY OF DEVICES PER CIRCUIT: CONTROL PANEL MODULE DEPENDENT
4. CONTRACTOR WIRING TO RELAY CONTACTS IS UNSUPERVISED. USE #14 AWG WIRE TO LOCAL CODE.
5. RELAY CONTACTS RATED 2A, 24VDC (1A FOR INDUCTIVE LOAD) RELAY CONTACTS RATED 0.5A 120VAC (NON POWER LIMITED) FOR POWER–LIMITED OPERATION, POWER MUST BE PROVIDED FROM FACP OR POWER–LIMITED POWER SUPPLY LISTED FOR FIRE PROTECTIVE SIGNALING USE.
6. SEE INSTALLATION INSTRUCTIONS 574–194.
7. IF SHIELD IS PRESENT, CONNECT TO THE OUTGOING IDNet/MAPNET II SHIELD TO PROVIDE A CONTINUOUS SHIELD OVER THE LENGTH OF THE IDNet/MAPNET II CHANNEL. METHOD OF SPLICE DETERMINED BY AHJ.
8. WHEN CONNECTED TO A NON POWER–LIMITED SOURCE, THE WIRING MUST MAINTAIN A MINIMUM 1/4 INCH SEPARATION FROM IDNet/MAPNET II WIRING.
9. WHEN USED WITH NON POWER–LIMITED SOURCE, THE "POWER LIMITED WIRING" INDICATION ON THE DEVICE LABEL MUST BE OBLITERATED.
10. WHEN BOTH POWER–LIMITED AND NON POWER–LIMITED SOURCES ARE PRESENT, USE TYPE FPL, FPLR OR FPLP POWER LIMITED CABLE FOR POWER–LIMITED CIRCUITS.
11. MAXIMUM TOTAL WIRE (INCLUDING ALL T–TAPS) ON CIRCUIT, FROM THE F.A.C.P. NOT TO EXCEED 10,000 FEET OR .5Ω/F. (CLASS B ONLY)
12. REFER TO FIELD WIRING DIAGRAM 842–073

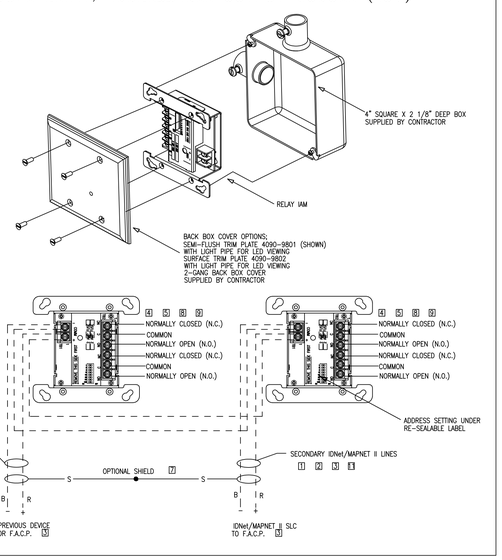

tyco SimplexGrinnell
Safer. Smarter. Tyco.™
DISTRICT 141
30 FORREST JONES DRIVE
WESTBROOK ME 04092
SERVICE: 207-842-8400
PHONE: 207-842-8440
FAX: 207-842-8449

Date: 12/22/17

unum

UNUM WORKPLACE TRANSFORMATION - HO2

UNUM HO2
2211 CONGRESS ST, MAIL STOP B146
PORTLAND, ME 04102-1941

ISSUE LOG					
MARK	DATE	CAD	CHK	DESCRIPTION	

DRAWN BY:	PRANESH
CHECKED BY:	AO
ISSUE DATE:	11/3/17
JOB #:	602887501
PROJECT #:	147:
SIMPLEXGRINNELL ©	2017
SYSTEM:	FIRE ALARM SYSTEM
SHEET:	WIRING TYPICALS

FA-701

IMPORTANT NOTICE 17-1285: By accepting or using this drawing and/or the information contained herein, the user agrees to the following terms and conditions: The electronic information in the drawing may be subject to international or commercial patents. Any use, resale, copying, modification or adaption of the information contained herein shall be at the sole risk of the user. This information may not be subject to transferred to any third party, used in other projects or addition to the project for which it was prepared, or used for completion of this project by any third party. SimplexGrinnell disclaims all liability for the use or misuse of all or any third party such use will be a user's sole risk. User shall, to the fullest extent permitted by law, defend, indemnify, and hold Simplex

FILE PATH: C:\Users\sechapman\Box Sync\Current Projects\147-602887501 - Unum HO2 FA Devices\Fire Alarm\FA-701.dwg
LAST SAVED BY: SECHAPMAN
LAST PRINTED: 11/3/2017 12:43:36 PM
30" x 42" - Arch E1 Size