DEVICE MOUNTING HEIGHT REFERENCE (PER NFPA 72)

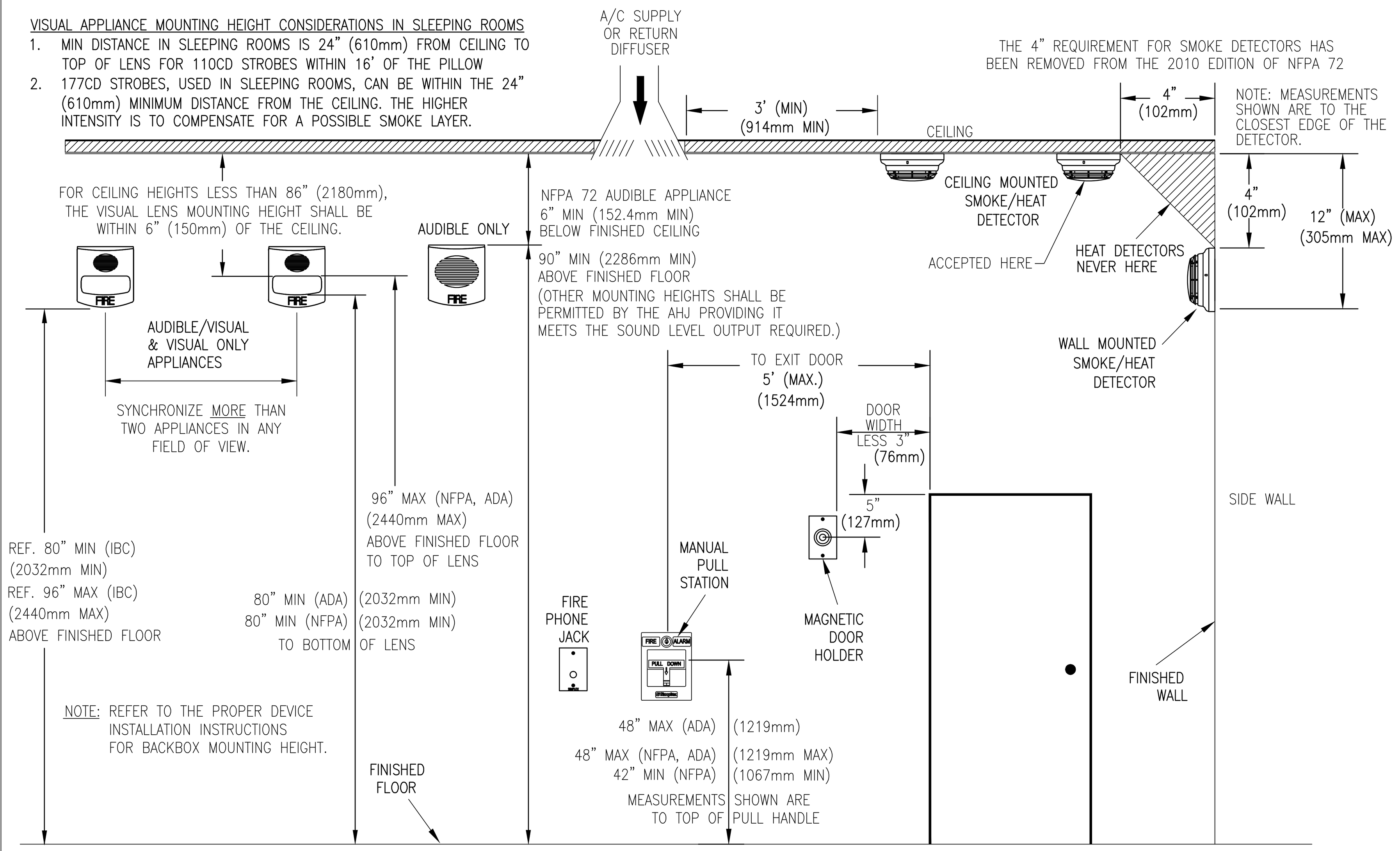

4098–9792 STANDARD SENSOR BASE

PRODUCT INFORMATION

FEATURES:
- UL LISTED, FM APPROVED
- TRUEALARM ANALOG SENSING PROVIDES DIGITAL TRANSMISSION OF ANALOG SENSOR VALUES VIA MAPNETII, OR IDNet SLC TWO WIRE COMMUNICATIONS
- FIRE ALARM CONTROL PANEL PROVIDES:
  - –INDIVIDUAL SENSITIVITY SELECTION FOR EACH SENSOR
  - –PEAK VALUE LOGGING ALLOWING ACCURATE ANALYSIS FOR SENSITIVITY SELECTION
  - –AUTOMATIC ENVIRONMENTAL COMPENSATION
  - –DISPLAY OF SENSITIVITY IN PERCENT PER FOOT
  - –MULTISTAGE ALARM OPERATION
  - –ABILITY TO DISPLAY AND PRINT DETAILED SENSOR INFORMATION IN PLAIN ENGLISH LANGUAGE
- PHOTOELECTRIC SMOKE SENSOR 4098–9714: SEVEN LEVELS OF SENSITIVITY FROM 0.2% TO 3.7%
- IONIZATION SMOKE SENSOR 4098–9717: FOUR LEVELS OF SENSITIVITY FROM 0.5% TO 1.7%.
- HEAT SENSOR 4098–9733:
  - –RATE–OF–RISE TEMPERATURE DETECTION IS SELECTABLE AT THE CONTROL PANEL FOR EITHER 15°F OR 20°F PER MINUTE
  - –FIXED TEMPERATURE SENSING IS INDEPENDENT OF RATE–OF–RISE AND PROGRAMMABLE TO OPERATE AT 135°F OR 155°F
  - –TRUEALARM HEAT SENSORS CAN BE PROGRAMMED AS A UTILITY DEVICE TO MONITOR FOR TEMPERATURE EXTREMES IN THE RANGE FROM 32° F TO 120° F.
- UL STANDARD SPACING:
  - –60 FT SPACING FOR 135° F
  - –40 FT SPACING FOR 155° F
- INTEGRAL RED LED FOR POWER–ON (PULSING), OR ALARM OR TROUBLE (STEADY ON)
- BASE MOUNTED ADDRESS SELECTION:
  - –ACCESSIBLE FROM FRONT (DIP SWITCH UNDER SENSOR)
  - –ADDRESS REMAINS WITH ITS PROGRAMMED LOCATION
- FOR USE WITH SIMPLEX 4010, 4100, 4020, AND 4120 SERIES CONTROL PANELS.
- MAXIMUM QUANTITY OF DEVICES:
  - –127 FOR 4020, 4100, 4120
  - –250 FOR 4010, 4100
- MOUNTING: CEILING OR WALL
- COLOR : FROST WHITE
- BASE DIMENSIONS: 15/16" X 4–7/8"

SPECIFICATIONS:
- UL LISTED TEMPERATURE RANGE: 32°F TO 100°F
- OPERATING TEMPERATURE RANGE: 32°F TO 120°F
- HUMIDITY RANGE: 10% TO 95% RH
- PHOTOELECTRIC SENSOR AIR VELOCITY RANGE: 0–2000 FT/MIN
- IONIZATION SENSOR AIR VELOCITY RANGE: 0–300 FT/MIN
- WIRING CONNECTIONS: SCREW TERMINALS FOR IN/OUT WIRING, #18 TO #14 AWG
- COMMUNICATIONS MAPNETII/IDNet SLC: 1 ADDRESS PER BASE
  VOLTAGE (MAPNETII/IDNet SLC): 24–40VDC
  CURRENT: 400uA TYPICAL

DESCRIPTION:
TRUEALARM SENSOR BASES CONTAIN INTEGRAL ADDRESSABLE ELECTRONICS THAT CONSTANTLY MONITOR THE STATUS OF THE DETACHABLE PHOTOELECTRIC, IONIZATION, OR HEAT SENSORS. EACH SENSOR'S OUTPUT IS DIGITIZED AND TRANSMITTED TO THE SYSTEM FIRE ALARM CONTROL PANEL EVERY FOUR SECONDS. SINCE TRUEALARM SENSORS USE THE SAME BASE, DIFFERENT SENSOR TYPES CAN BE EASILY INTERCHANGED TO MEET SPECIFIC LOCATION REQUIREMENTS. THIS FEATURE ALLOWS INTENTIONAL SENSOR SUBSTITUTION DURING BUILDING CONSTRUCTION. WHEN CONDITIONS ARE TEMPORARILY DUSTY, INSTEAD OF COVERING THE SMOKE SENSORS, HEAT SENSORS MAY BE INSTALLED WITHOUT REPROGRAMMING THE CONTROL PANEL. ALTHOUGH THE CONTROL PANEL WILL INDICATE AN INCORRECT SENSOR TYPE, THE HEAT SENSOR WILL OPERATE AS A DEFAULT SENSITIVITY PROVIDING HEAT DETECTION FOR BUILDING PROTECTION AT THAT LOCATION.

WIRING:
1. ALL WIRING TO COMPLY WITH LOCAL CODE.
2. CONDUCTORS MUST TEST FREE OF ALL GROUNDS.
3. MAINTAIN CORRECT POLARITY
4. MAPNETII/IDNet SLC WIRING TO BE #18 AWG TWISTED SHIELDED PAIR
5. IF SHIELD IS PRESENT, CONNECT TO THE OUTGOING IDNet SLC SHIELD TO PROVIDE A CONTINUOUS SHIELD OVER THE LENGTH OF THE IDNet SLC CHANNEL. METHOD OF SPLICE DETERMINED BY AHJ.
6. REFER TO INSTALLATION INSTRUCTIONS (574–707)
7. REFER TO APPLICATION MANUAL (574–709)

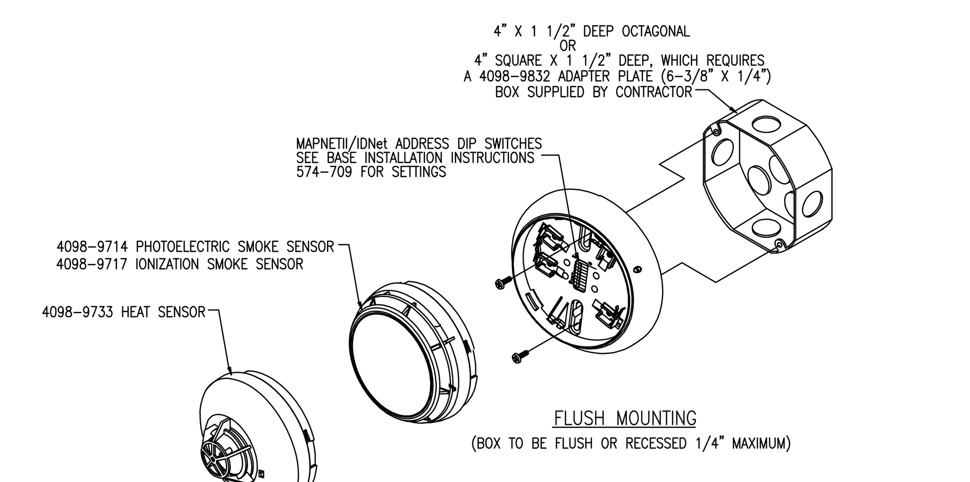

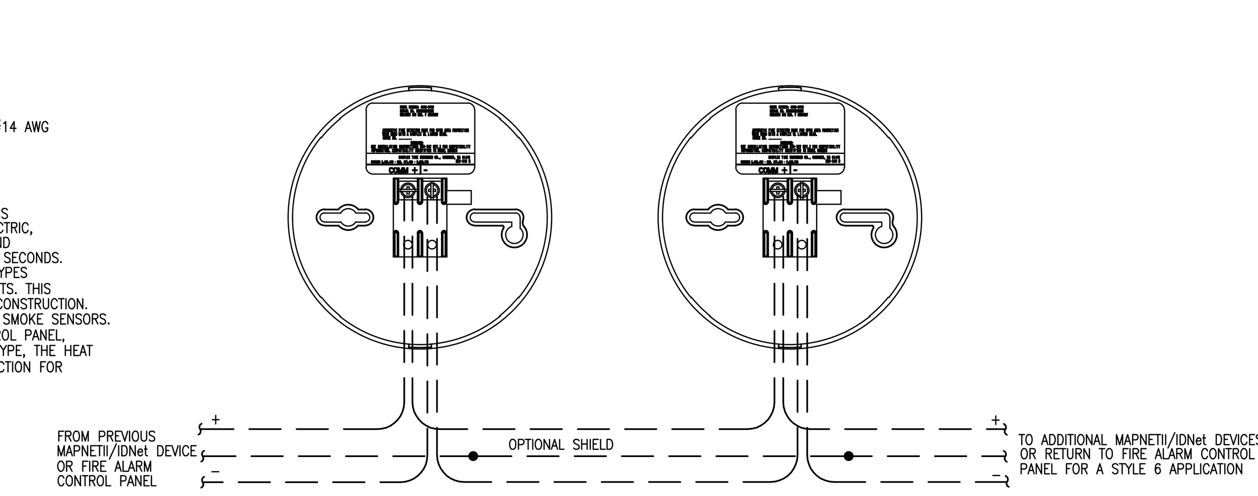

4090–9001 IDNET SLC, SUPERVISED ADDRESSABLE INPUT MODULE (AIM)

PRODUCT INFORMATION

FEATURES:
- UL LISTED
- ADDRESSABLE COMMUNICATIONS SUPPLY BOTH DATA AND POWER TO PROVIDE:
  - – SUPERVISED STYLE B MONITORING OF NORMALLY OPEN DRY CONTACTS.
  - – COMMUNICATIONS WIRING USING ONE TWISTED, SHIELDED WIRE PAIR.
- COMPATIBLE WITH SIMPLEX ADDRESSABLE FIRE ALARM CONTROL PANELS.
- COMPACT, SEALED CONSTRUCTION:
  - – ALLOWS MOUNTING IN A SINGLE GANG BOX
  - – REDUCES DUST INFILTRATION
- PROVIDES CURRENT LIMITED MONITORING
  - – TO MONITOR TAMPER SWITCH (SUPERVISORY) AND WATER FLOW SWITCH (ALARM) ON SAME CIRCUIT
  - – REQUIRES ONLY ONE ADDRESSABLE POINT
- SELECTABLE LATCHING OPERATION
  - – MONITORS MOMENTARY CONTACT CLOSURES SUCH AS RATE–OF RISE HEAT DETECTORS

SPECIFICATIONS:
- WIRE CONNECTIONS: SCREW TERMINALS FOR IN/OUT WIRING FOR WIRE FROM #18 TO #14 AWG.
- DIMENSIONS: 1 9/16" X 1 3/4" X 1 1/4"
- TEMPERATURE RANGE: 32° F TO 158° F (0° C TO 70° C)
- HUMIDITY: UP TO 93% RH AT 100° F
- SUPERVISION RESISTOR: 6.8kΩ 1/2W, (SUPPLIED) SIMPLEX PART NO. 733–886
- RESISTOR FOR CURRENT LIMITED OPERATION: 4.7kΩ 1/2W, WITH A 1.8kΩ 1/2W
- INPUT REQUIREMENTS: NORMALLY OPEN, DRY CONTACTS
- HOUSING MATERIAL: BLACK THERMOPLASTIC

DESCRIPTION:
THE 4090–9001 IS AN ADDRESSABLE INPUT MODULE (AIM) WITH POWER AND COMMUNICATIONS SUPPLIED BY A TWO WIRE ADDRESSABLE CIRCUIT. IT PROVIDES LOCATION SPECIFIC ADDRESSABILITY TO A SINGLE INITIATING DEVICE (SUCH AS SINGLE STATION SMOKE DETECTOR ALARM CONTACTS OR HEAT DETECTOR CONTACTS) OR MULTIPLE DEVICES AT THE SAME LOCATION BY MONITORING NORMALLY OPEN, DRY CONTACTS AND THE WIRING TO AN END–OF–LINE RESISTOR. CLOSURE OF THE MONITORED CONTACTS INITIATES AN ALARM OR OTHER RESPONSE AS PROGRAMMED AT THE FIRE ALARM CONTROL PANEL. AN OPEN IN THE MONITORED CIRCUIT WIRING WILL CAUSE A TROUBLE TO BE REPORTED. IF THE INITIATING DEVICE CONTACTS ARE MOMENTARY, SUCH AS FROM A RATE–OF–RISE HEAT DETECTOR, ENABLING THE LATCH FEATURE WILL MAINTAIN THE ALARM CONDITION UNTIL THE SYSTEM IS RESET. FOR APPLICATIONS WHERE THE CONTACT CLOSURE LATCHES, OR IF ITS CONDITION NEEDS TO BE TRACKED AT THE CONTROL PANEL NON–LATCHING OPERATION MAY BE ENABLED.

WIRING NOTES:
1. ALL WIRING TO COMPLY WITH LOCAL CODE.
2. CONDUCTORS MUST TEST FREE OF ALL GROUNDS.
3. ONLY N.O. DRY CONTACTS ARE ALLOWED.
4. MAXIMUM WIRE LENGTH (NO. 18 AWG) IS 400 FT. W/2081–9044 OVER VOLTAGE PROTECTORS OR 400 FT. W/O PROTECTORS.
5. A MAXIMUM QUANTITY OF DEVICES PER CIRCUIT: CONTROL PANEL MODULE DEPENDENT
6. IF SHIELD IS PRESENT, CONNECT TO THE OUTGOING IDNet SHIELD TO PROVIDE A CONTINUOUS SHIELD OVER THE LENGTH OF THE IDNet CHANNEL. METHOD OF SPLICE DETERMINED BY AHJ.
7. REFER TO INSTALLATION INSTRUCTIONS 574–331.
8. MAXIMUM ALLOWABLE LINE RUN FROM THE F.A.C.P. TO THE FARTHEST DEVICE, NOT TO EXCEED 2500 FEET.
9. MAXIMUM TOTAL WIRE (INCLUDING ALL T–TAPS) FROM THE FIRE ALARM CONTROL PANEL
10. FOR STYLE 6 CIRCUIT WIRING IT IS RECOMMENDED THAT THE PRIMARY ① AND THE BACK–UP ② LINES BE IN SEPARATE WIRE RUNS AND IN COMPLIANCE WITH LOCAL REQUIREMENTS.
11. REFER TO FIELD WIRING DIAGRAM 842–073

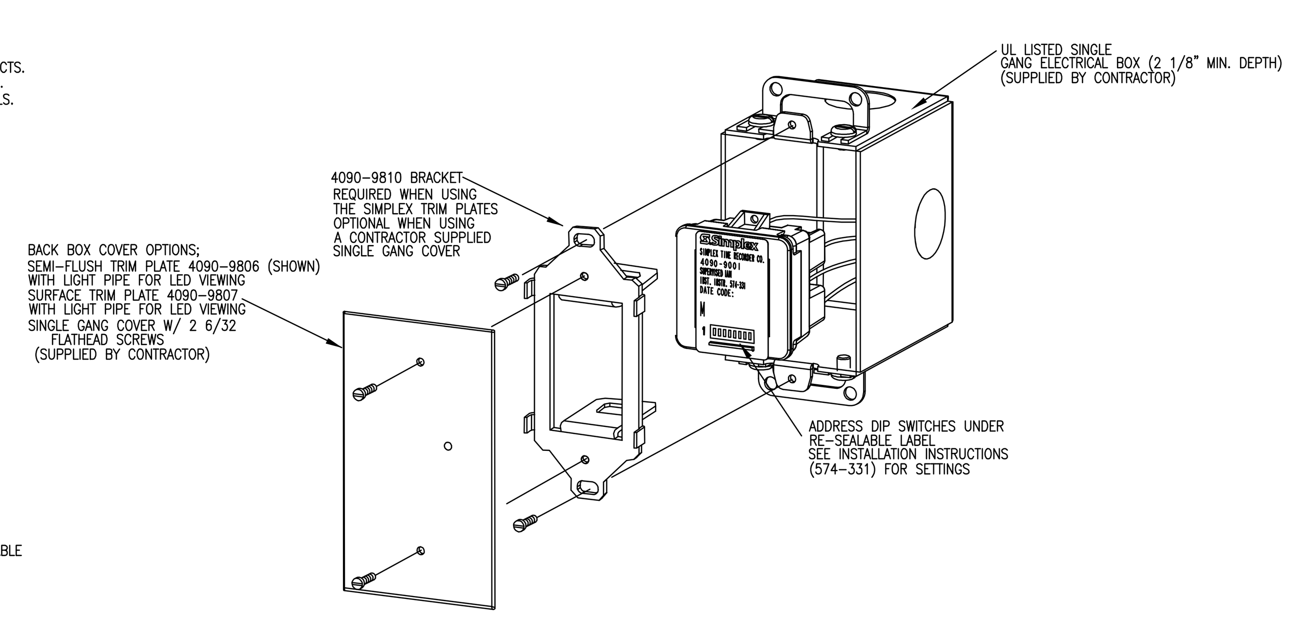

T–SENSING OPERATION:
- SUPERVISED INPUT:
  - – 4090–9001 AIM WITH T–SENSE CAPABILITY HAS A SUPERVISED INPUT THAT MONITORS FOR CONTINUITY TO AN END–OF–LINE RESISTOR AND CAN DIFFERENTIATE BETWEEN A SHORT CIRCUIT CONTACT CLOSURE AND A CURRENT LIMITED CONTACT CLOSURE.
- FOUR STATE OPERATION:
  - – NORMAL IS WHEN ALL CONTACTS ARE OPEN AND THERE IS CONTINUITY TO THE END–OF–LINE RESISTOR.
  - – OPEN IS WHEN CONTINUITY DOES NOT EXIST TO THE END–OF–LINE RESISTOR, CAUSING A TROUBLE CONDITION.
  - – SHORT, INDICATES THAT A CONTACT HAS CLOSED THAT IS DIRECTLY CONNECTED TO THE INPUT CIRCUIT.
  - – CURRENT LIMITED INDICATES THAT A CONTACT HAS CLOSED BEYOND A SERIES CONNECTED CURRENT LIMITING RESISTOR. THIS OPERATION ALLOWS DIFFERENTIATION BETWEEN TWO DIFFERENT CONTACT TYPES DUE TO THEIR WIRING LOCATION, AND REPORTING AS A SINGLE IDNET ADDRESSABLE POINT TO A 4100U FIRE ALARM CONTROL PANEL.

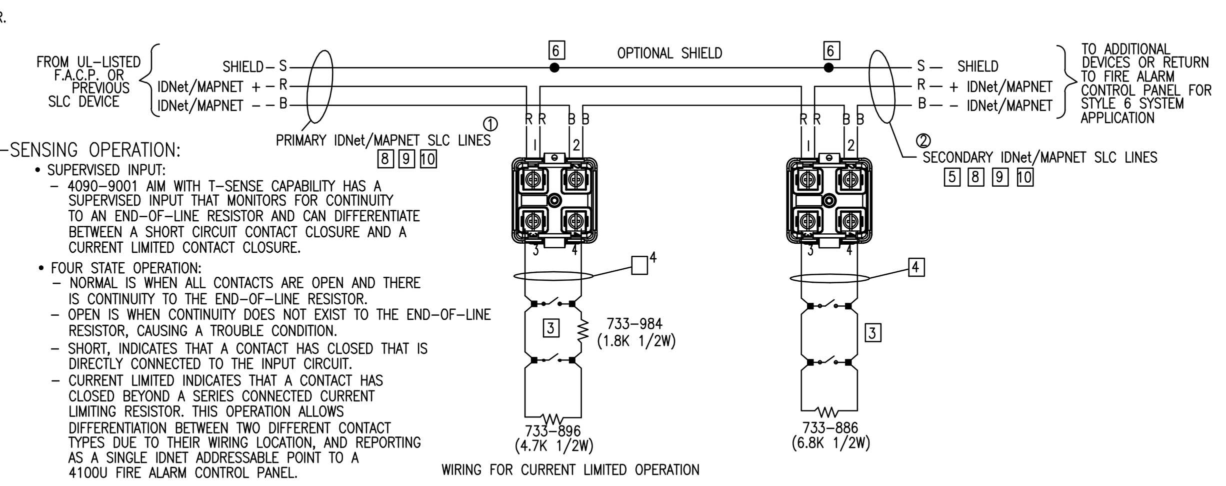

4090–9008 IDNet SLC, DUAL RELAY, ADDRESSABLE OUTPUT MODULE (AOM)

PRODUCT INFORMATION

FEATURES:
- UL LISTED
- A SINGLE ADDRESSABLE POINT BOTH CONTROLS TWO 2A FORM "C" CONTACT AND TRACKS ITS STATUS
- COMPATIBLE WITH SIMPLEX MODEL 4010 AND 4100 ADDRESSABLE FIRE ALARM CONTROL PANEL
- LATCHING RELAY DESIGN ALLOWS DATA AND POWER TO BE BOTH SUPPLIED BY IDNet SLC COMMUNICATIONS
- COMPACT, SEALED CONSTRUCTION:
  - – SCREW TERMINALS FOR WIRING CONNECTIONS
  - – REDUCES DUST INFILTRATION

SPECIFICATIONS:
- RELAY AOM POWER: SUPPLIED BY IDNet SLC COMMUNICATIONS
- RELAY AOM CONTACTS (FORM "C", SPDT)
- POWER LIMITED RATING: 2A @ 24VDC, TRANSIENT SUPPRESSED LOADS, 1A @ 24VDC FOR INDUCTIVE LOADS
- NON POWER LIMITED RATING: 1/2A @ 24VAC, TRANSIENT SUPPRESSED LOADS, 1A @ 24 VDC FOR INDUCTIVE LOADS
- WIRE CONNECTIONS: SCREW TERMINALS FOR IN/OUT WIRING, #18 TO #14 AWG WIRE
- COMPATIBLE WITH SIMPLEX 2081–9044 OVER VOLTAGE PROTECTORS
- DIMENSIONS: 4 1/8"H x 4 1/8"W x 1 3/8"D (105mm x 105mm x 35mm)
- HOUSING MATERIAL: BLACK THERMOPLASTIC
- MOUNTING PLATE MATERIAL: SHEET METAL, GALVANIZED
- TEMPERATURE RANGE: 32° F TO 120° F (0° C TO 49° C) INTENDED FOR INDOOR OPERATION
- HUMIDITY RANGE UP TO 93% RH AT 100° F (38° C)

DESCRIPTION:
IDNet SLC RELAY MODULES ALLOW THE SIMPLEX FIRE ALARM CONTROL PANEL TO CONTROL A REMOTELY LOCATED FORM "C" CONTACT USING IDNet ADDRESSABLE SLC COMMUNICATIONS FOR BOTH DATA AND POWER. TYPICAL APPLICATIONS WOULD BE FOR SWITCHING LOCAL POWER FOR CONTROL FUNCTIONS SUCH AS ELEVATOR CAPTURE, OR CONTROL OF HVAC COMPONENTS, PRESSURIZATION FANS, DAMPERS, ETC. RELAY STATUS IS ALSO COMMUNICATED REQUIRING ONLY ONE DEVICE ADDRESS.

WIRING NOTES:
1. IDNet SLC LINES ARE TO BE #18 AWG TWISTED PAIR (CONSULT SG SALES ENGINEERING FOR EXCEPTIONS) SHIELD RECOMMENDED.
2. MAXIMUM ALLOWABLE LINE RUN, FROM THE F.A.C.P. TO THE FARTHEST DEVICE, NOT TO EXCEED 2500 FEET.
3. MAXIMUM QUANTITY OF DEVICES PER CIRCUIT: CONTROL PANEL MODULE DEPENDENT
4. CONTRACTOR WIRING TO RELAY CONTACTS IS UNSUPERVISED. USE #14 AWG WIRE TO LOCAL CODE.
5. RELAY CONTACTS RATED 2A, 24VDC (1A FOR INDUCTIVE LOAD) RELAY CONTACTS RATED 0.5A 120VAC (NON POWER LIMITED) FOR POWER–LIMITED OPERATION, POWER MUST BE PROVIDED FROM FACP OR POWER–LIMITED POWER SUPPLY LISTED FOR FIRE PROTECTIVE SIGNALING USE.
6. SEE INSTALLATION INSTRUCTIONS 574–184.
7. IF SHIELD IS PRESENT, CONNECT TO THE OUTGOING IDNet SHIELD TO PROVIDE A CONTINUOUS SHIELD OVER THE LENGTH OF THE IDNet CHANNEL. METHOD OF SPLICE DETERMINED BY AHJ.
8. WHEN CONNECTED TO A NON POWER–LIMITED SOURCE, THE WIRING MUST MAINTAIN A MINIMUM 1/4 INCH SEPARATION FROM IDNet WIRING.
9. WHEN USED WITH NON POWER–LIMITED SOURCE, THE "POWER LIMITED WIRING" INDICATION ON THE DEVICE LABEL MUST BE OBLITERATED.
10. WHEN BOTH POWER–LIMITED AND NON POWER–LIMITED SOURCES ARE PRESENT, USE TYPE FPL, FPLR OR FPLP POWER LIMITED CABLE FOR POWER–LIMITED CIRCUITS.
11. MAXIMUM TOTAL WIRE (INCLUDING ALL T–TAPS) ON CIRCUIT, FROM THE F.A.C.P. NOT TO EXCEED 10,000 FEET OR .58uF. (CLASS B ONLY)
12. REFER TO FIELD WIRING DIAGRAM 842–073

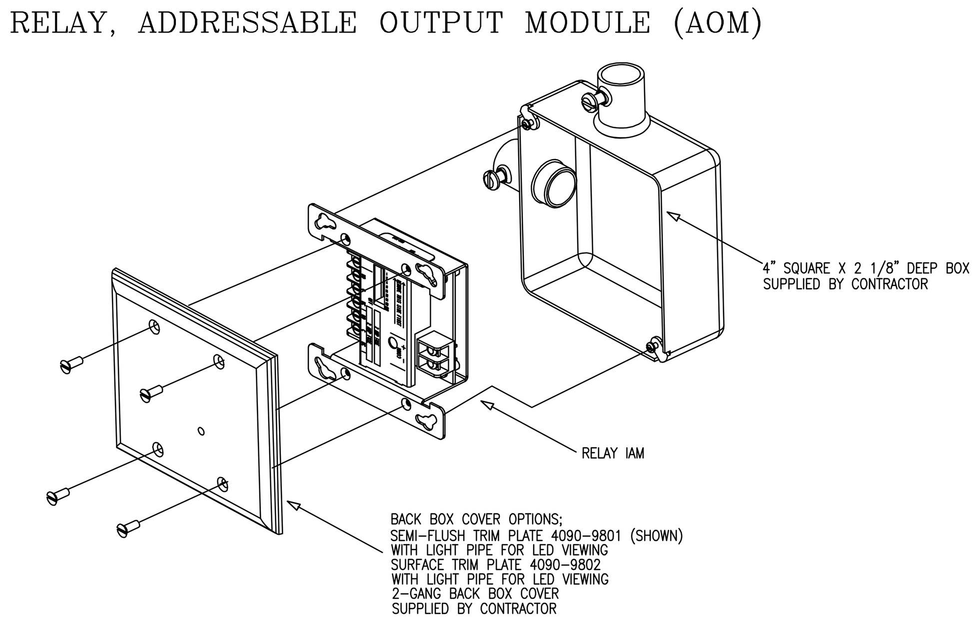

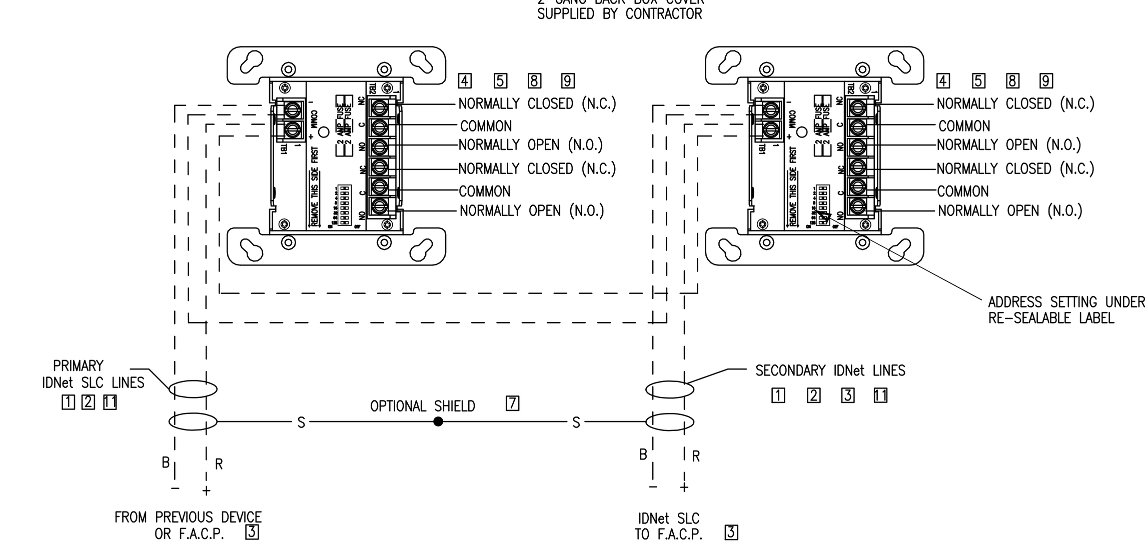

TrueAlert™ NON–ADDRESSABLE CEILING MOUNT SPEAKER/VISIBLE NOTIFICATION APPLIANCE

PRODUCT INFORMATION

FEATURES:
- UL LISTED TO STANDARD 1971 & 1480
- 24 VDC OPERATION WITH SWITCH SELECTION FOR FREE–RUN OR SYNCHRONIZED FLASH RATE, COMPATIBLE WITH SMARTSYNC™ STROBE OPERATION
- MULTI–TAPPED SPEAKER @ 25 OR 70.7 VRMS

SYNCHRONIZATION FLASH RATE MODE FOR USE WITH:
- SYNCHRONIZATION MODULES FOR CLASS B (STYLE Y) OR CLASS A (STYLE Z) OPERATION
- SMARTSYNC NOTIFICATION APPLIANCE TWO–WIRE CONTROL, WHEN CONNECTED TO A COMPATIBLE FIRE ALARM CONTROL PANEL NAC OR SMARTSYNC CONTROL MODULE 4905–9938

*CURRENT DRAWS REFLECT STROBE FLASHING

MODEL NUMBER	HOUSING COLOR	LETTERING	STROBE RATING	CURRENT RATING, NOMINAL AVERAGE 16 VRMS	17 VRMS	18 VRMS	19 VRMS	20 VRMS	24 VRMS
4903–9196	WHITE	RED	15cd	90mA	85mA	80mA	76mA	67mA	60mA
4903–9197	WHITE	RED	30cd	128mA	120mA	114mA	108mA	96mA	85mA
4903–9198	WHITE	RED	110cd	285mA	268mA	253mA	240mA	213mA	190mA

SPEAKER dBA AT 10' (RATED WATTS)			
1/4	1/2	1	2
79	82	85	88

SPECIFICATIONS:
- SPEAKER HOUSING DIMENSIONS : 7 1/2" DIA. X 1/2"D (191MM X 13MM)
- STROBE LENS PROTRUSION DIMENSIONS : 2 5/8" (67MM) ABOVE SPEAKER HOUSING
- DEPTH INTO BOX 2 3/4" (70MM)
- TEMPERATURE RANGE: 32° F TO 122° F (0° TO 50° C)
- HUMIDITY RANGE: 10% TO 93% NON–CONDENSING AT 100° F (38° C)
- CONNECTIONS TERMINALS FOR #18 AWG TO #12 AWG SEPARATE TERMINALS FOR SPEAKER AND STROBE APPLIANCE

WIRING:
1. NOTIFICATION APPLIANCE IS RATED PER INDIVIDUAL NAMEPLATE LABEL.
2. MAINTAIN CORRECT POLARITY ON TERMINAL CONNECTIONS. DO NOT LOOP WIRES UNDER TERMINALS.
3. ALL NAC WIRING CONNECTIONS ARE SUPERVISED AND POWER–LIMITED.
4. SEE INSTALLATION INSTRUCTIONS FOR ADDITIONAL INFORMATION.

STROBE
- – RATED VOLTAGE RANGE: 16 TO 33 VDC
- – FLASH RATE: 1Hz
- – SYNCHRONIZED MODE NAC LOADING: MAXIMUM OF 35 SYNCHRONIZED STROBES PER NAC CIRCUIT.

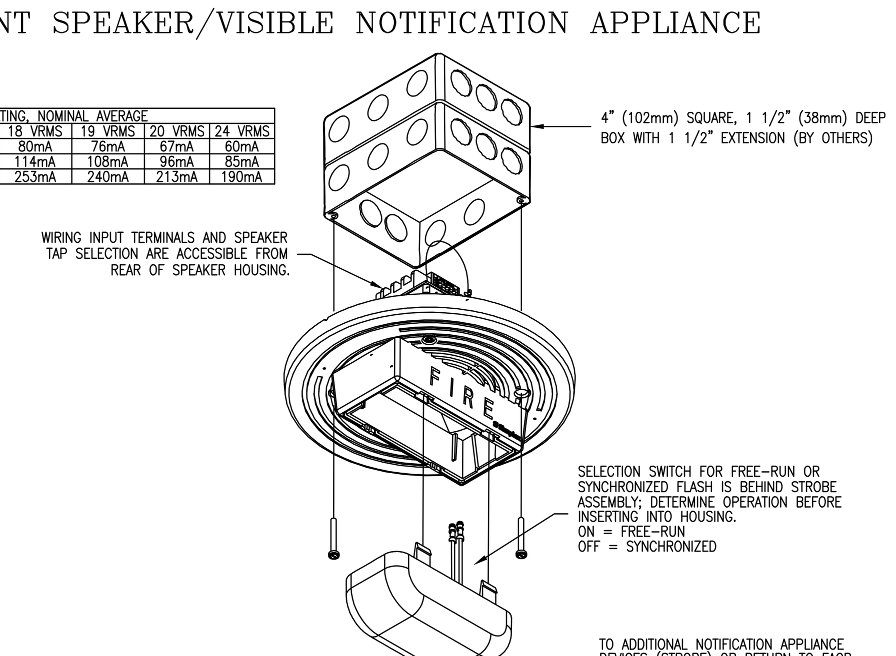

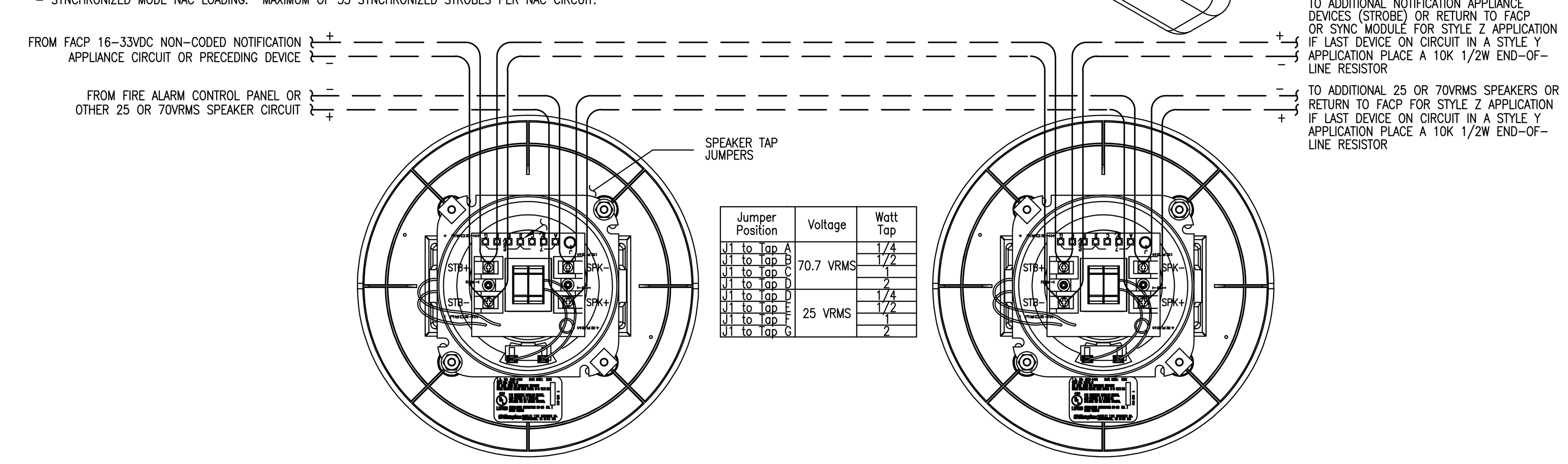

Jumper Position	Voltage	Watt Tap
J1 to Tap A	70.7 VRMS	1/4
J1 to Tap B		1/2
J1 to Tap C		1
J1 to Tap D		2
J1 to Tap D	25 VRMS	1/4
J1 to Tap E		1/2
J1 to Tap F		1
J1 to Tap G		2

TrueAlert™ NON–ADDRESSABLE MULTI–CANDELA VISIBLE NOTIFICATION APPLIANCE (CEILING MOUNT)

PRODUCT INFORMATION

FEATURES:
- UL LISTED TO STANDARD 1971
- ADA COMPATIBLE

SYNCHRONIZATION FLASH RATE MODE FOR USE WITH:
- SEPARATE STROBE SYNCHRONIZATION MODULES THAT ARE AVAILABLE FOR CLASS B OR CLASS A OPERATION
- SEPARATE SMARTSYNC CONTROL MODULES (SCMs) THAT PROVIDE CLASS B OR CLASS A OUTPUT FROM CONVENTIONAL NAC INPUTS

SPECIFICATIONS:
- HOUSING DIMENSIONS: 4–3/4" L X 2–5/16" W X 2–5/8" D (121mm X 75mm X 67mm)
- TEMPERATURE RANGE: 32°F TO 122°F (0 TO 50°C)
- HUMIDITY RANGE: 10% TO 93% NON–CONDENSING AT 100°F (38°C)
- TERMINAL BLOCKS FOR 18AWG TO 12AWG; TWO WIRES PER TERMINAL FOR IN/OUT WIRING.

WIRING NOTES:
1. NOTIFICATION APPLIANCES ARE RATED PER INDIVIDUAL NAMEPLATE LABEL.
2. MAINTAIN CORRECT POLARITY ON TERMINAL CONNECTIONS. DO NOT LOOP WIRES UNDER TERMINALS.
3. ALL NAC WIRING CONNECTIONS ARE SUPERVISED AND POWER–LIMITED.
4. SEE INSTALLATION INSTRUCTIONS (579–548) FOR ADDITIONAL INFORMATION.

STROBE:
- RATED VOLTAGE RANGE: UL LISTED: 16 VDC TO 33 VDC PER UL 1971
  ULC LISTED: 20 VDC TO 30 VDC PER ULC S526–M878
- FLASH RATE: 1Hz
- SYNCHRONIZED MODE NAC LOADING: MAXIMUM OF 35 SYNCHRONIZED STROBES PER NAC CIRCUIT.

*CURRENT DRAWS REFLECT STROBE FLASHING

MODEL NUMBER	HOUSING COLOR	LETTERING COLOR	STROBE RATING	RMS CURRENT @ 16 VDC	18 VDC	24 VDC
4906–9102	RED	WHITE	15cd	75 mA	67 mA	50 mA
			30cd	125 mA	111 mA	83 mA
			75cd	233 mA	207 mA	155 mA
			110cd	316 mA	281 mA	211 mA
4906–9104	WHITE	RED	15cd	75 mA	67 mA	50 mA
			30cd	125 mA	111 mA	83 mA
			75cd	233 mA	207 mA	155 mA
			110cd	316 mA	281 mA	211 mA

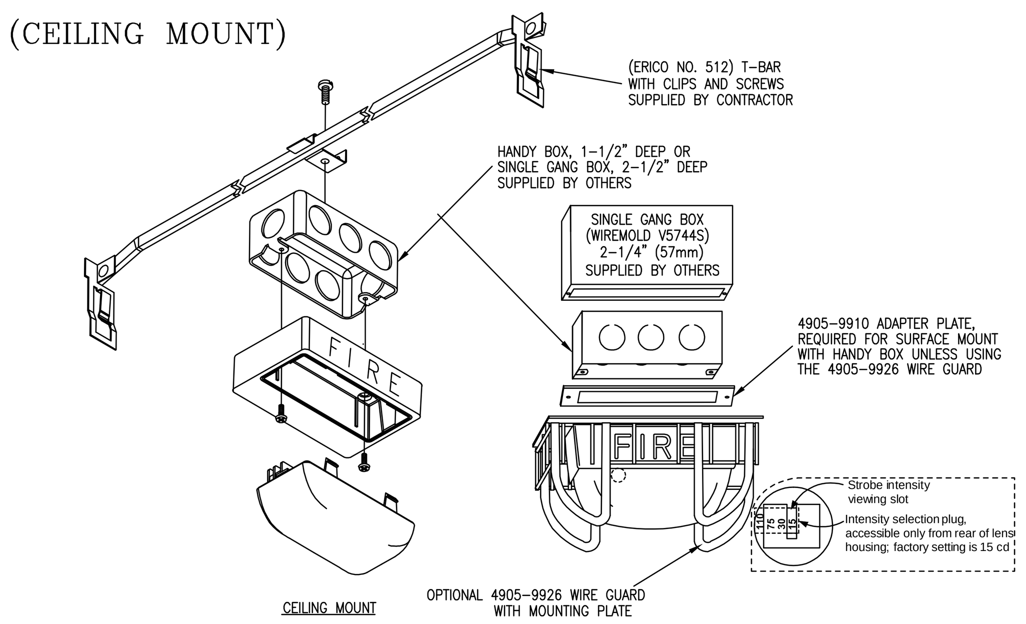

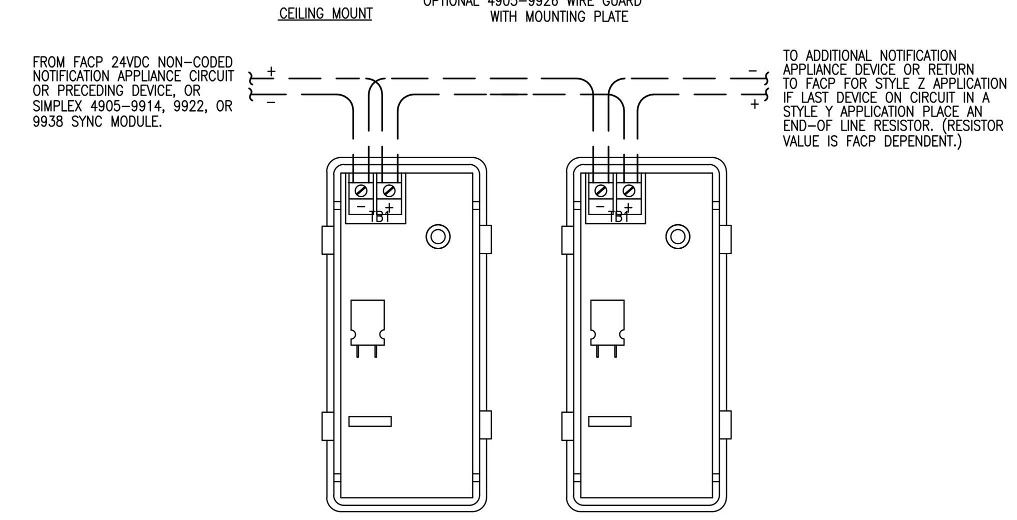

tyco SimplexGrinnell Safer. Smarter. Tyco.™

DISTRICT - 147
20 THOMAS DRIVE
WESTBROOK, ME 04092
SERVICE: 207-842-6440
PHONE: 207-842-6440
FAX: 207-842-6439

UNUM HO1 INTERIOR RENOVATIONS

UNUM HO1 INTERIOR RENOVATIONS
2211 CONGRESS STREET
PORTLAND, ME 04102

Revisions shown with △ symbol

ISSUE LOG: MARK	DATE	CAD	CHK	DESCRIPTION

DRAWN BY:	M.DESIATA
CHECKED BY:	S.KALAFARSKI
ISSUE DATE:	3/12/15
JOB #:	
PROJECT #:	147:983293301

SIMPLEXGRINNELL © 2015

SYSTEM: FIRE ALARM SYSTEM

SHEET: WIRING TYPICALS

FA-701

IMPORTANT NOTICE TO USER: By accepting or using this drawing and/or the information contained herein, the user agrees to the following terms and conditions: The electronic information in the drawing may be subject to intentional or unintentional alteration. Any use, reuse, copying modification or alteration of the information contained herein shall be at the sole risk of the user. This information may not be sold or transferred to any third party, used on other projects or additions to the project for which it was prepared, or used for completion of this project by any third party. SimplexGrinnell disclaims all liability for the use or reuse of altered files by the user or any third party and such use will be a user's sole risk. User shall, to the fullest extent permitted by law, defend, indemnify, and hold SimplexGrinnell harmless from any and all claims for loss, damage or injury arising directly or indirectly therefrom.

FILE PATH: P:\2015\147\Unum H01 Int Ren ESB 2015\Fire Alarm System\SG Dwgs\Original Dwgs & Calcs\Fire Alarm Drawings\FA-701.dwg
LAST SAVED BY: MDESIATA
LAST PRINTED: 3/12/2015 4:47:02 PM
30" x 42" - Arch E1 Size