SEE ENLARGED DETAIL C-I ON PAGE 3

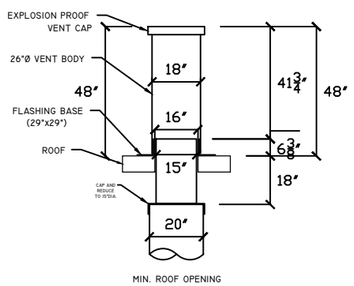

C-I / PG 3 SECTION VIEW - FLAT FLASHING TYPE VENT
SCALE: N.T.S

SEE ENLARGED DETAIL B-I ON PAGE 2

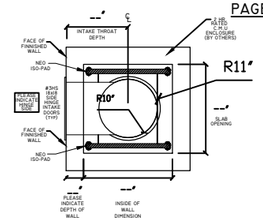

B-I / PG 2 PLAN VIEW- INTAKE & SUPPORT DETAIL COMBINED
SCALE: N.T.S

PLEASE INDICATE DIMENSIONS

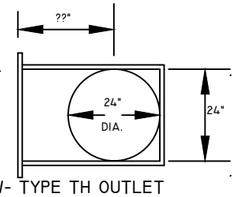

PLAN VIEW- TYPE TH OUTLET

PART CODES & TYPICAL CONNECTIONS

#1HH - BOTTOM HINGED INTAKE DOOR
#3HS - SIDE HINGED INTAKE DOOR
#2FH - FOOT OPERATED INTAKE DOOR
#8PN - PNEUMATIC OPERATED INTAKE DOOR
#4HSR- ROUND SIDE HINGED INTAKE DOOR
TYPE OG - INCLINED ROLLING OUTLET DR.
TYPE TH - TOP HINGED, HOPPER OUTLET DR.

NOTE: ALL U.S. CHUTES INTAKE DOORS ARE U.L. "B" LABEL RATED
TYPE "TH" HOPPER OUTLET ASSEMBLY IS U.L. "B" LABEL RATED
TYPE "OG" SEMI-HORIZ. OUTLET DOOR IS OF"B" LABEL RATED CONSTRUCTION

T = SPRINKLER & FLUSHING HEAD
Z = MOUNT CLIP FOR INTAKE TO GRID
S = SPRINKLER INTAKE
SCB = SPRINKLER CLIPS BOTTOM
CB = CLIPS BOTTOM
CC = CLIPS COMMON
CT = CLIPS TOP

TYPICAL CONNECTIONS

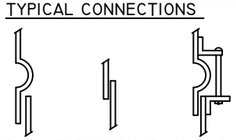

SLIP (S) EXPANSION (E) CLIP (C)

* SPRINKLER HEADS ON :
TOP & EVERY OTHER INTAKE

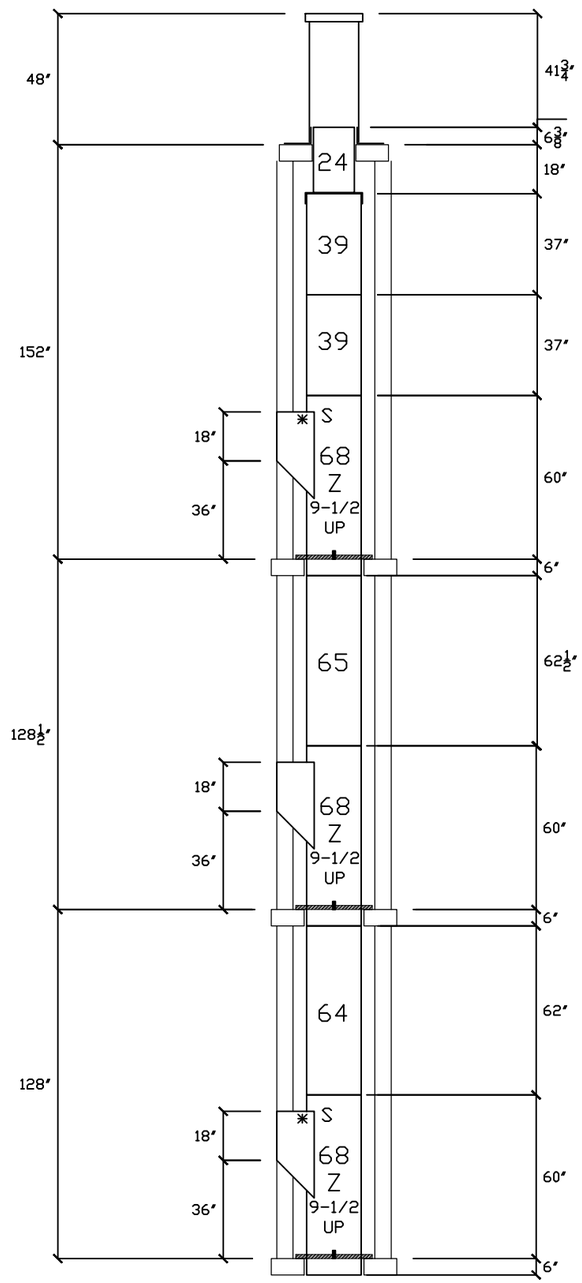

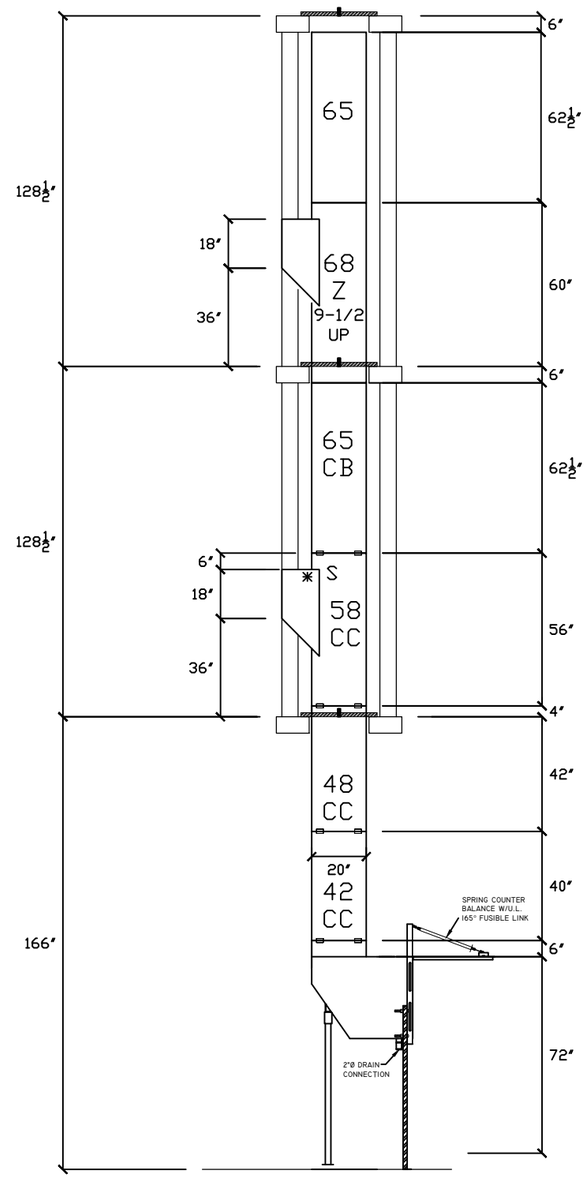

THIS DETAILED DRAWING IS THE PROPERTY OF U.S. CHUTES CORP. THIS INCLUDES PATENTS AND PATENTS APPLIED FOR. IT IS NOT TO BE COPIED, REPRODUCED OR USED TO MAKE DRAWINGS, PRINTS OR PARTS THEREFOR WITHOUT WRITTEN CONSENT OF U.S. CHUTES CORP. THE ACCEPTANCE OF THIS DRAWING IS THE ACCEPTANCE OF THE ABOVE CONDITIONS.

PARTITIONS AROUND CHUTES ARE NOT TO BE PLACED UNTIL CHUTES ARE INSTALLED.

NOTE: THE APPROVAL OF THE ARCHITECT AND/OR CONTRACTOR OF THIS DRAWING IS OUR AUTHORITY TO PROCEED WITH FABRICATION. WE WILL NOT BE RESPONSIBLE FOR ANY CHANGES MADE AFTER APPROVAL OR DUE TO FIELD CONDITIONS, UNLESS NOTIFIED AND REIMBURSED.

GENERAL CONTRACTOR NOTE

THESE DRAWINGS SHOW OUR INTERPRETATION OF THE CONTRACT DOCUMENTS. AFTER THIS MATERIAL IS FABRICATED ACCORDING TO THESE APPROVED DRAWINGS WE CANNOT BE RESPONSIBLE IF IT DOES NOT MEET JOB CONDITIONS. PLEASE VERIFY ALL INFORMATION ON THESE DRAWINGS. THANK YOU.

CHUTES

TYPE	QTY:	DIA.	GA.	MATERIAL
LINEN	1	20	16	A.S.

REMARKS

INTAKE DOORS

TYPE	SIZE.	QTY.	MATERIAL
3HS	18 X 18	5	S.S.

1-1/2HR."B"LABEL	YES	NAMEPLATE	YES
HARDWARE	TEE	CYL.LOCK	YES

OUTLET DOOR

TYPE	SIZE.	QTY.	MATERIAL
TH	24x30	1	A.S.

MISCELLANEOUS

1/2"SPRINKLER HD.	3

ACCESS DOOR

TYPE.	SIZE.	QTY.	MATERIAL

ABBREVIATIONS

AS--ALUMINIZED STEEL SS--STAINLESS STEEL
GS--GALVANIZED STEEL AL--ALUMINUM STEEL

SPECIAL EQUIPMENT

U.S. CHUTES
1-800-US-CHUTES (872-4883)
607 BANTAM ROAD
BANTAM, CT 06750

PROJECT: EMBASSY SUITES JOB#44353
ADDRESS: PORTLAND ME.
ARCHITECT:
CONTRACTOR: KTB HOSPITALITY
AGENT: PROD.#: FABRICATION DATE:

RELEASE

X	FOR APPROVAL		FILE COPY	RE-SUBMITTED
	FOR PRODUCTION		AS BUILT	

DATE: SUB DATE:10-16-12
BY: GMW SHEET: 1 OF 3 SCALE: N.T.S.