PUMP SCHEDULE

TAG	LOCATION	SERVICE	GPM	HEAD FT	HP	RPM	VOLTS	PH	REMARKS
DCP-1	REMOTE	110° HW REGIRC LOOP	7	10	1/25	-	115	1	3/4" BRONZE ELEC. BY DIV. 16
DCP-2	PENTHOUSE	140° HW REGIRC LOOP	7	10	1/25	-	115	1	3/4" BRONZE ELEC. BY DIV. 16
SP-1	ELEVATOR PIT	WATER REMOVAL	20	18	1/3	1550	115	1	1-½" DISCHARGE ELEC. BY DIV. 16
SP-2	WATER ENTRANCE	WASTE LIFT	25	15	1/3	1650	115	1	1-½" DISCHARGE, TANK, ELEC. BY DIV. 16

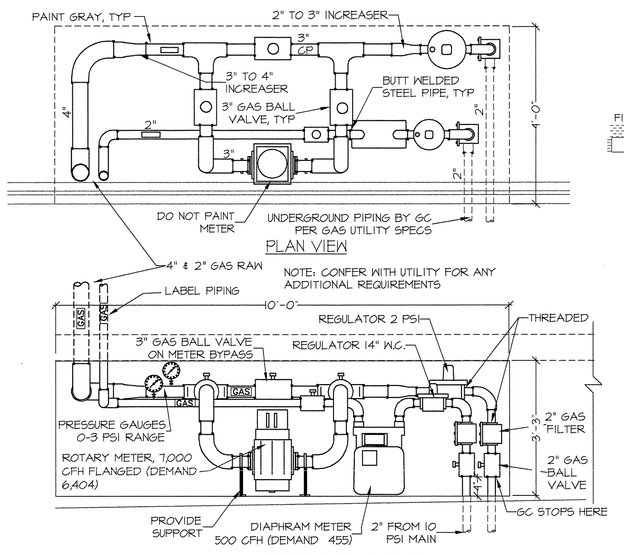

1 / P3 GAS ENTRANCE DETAIL
SCALE: NONE

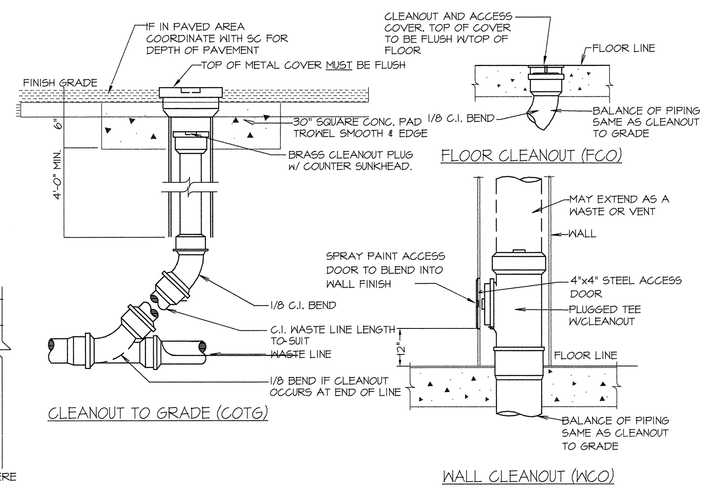

2 / P1 CLEANOUT DETAILS
SCALE: NONE

GENERAL NOTES

1. All work shall be in accordance with the Maine State Plumbing Code, local codes and ordinances, National Fire Code (NFPA), or these plans or specifications, whichever is more strict.

2. All drawings are schematic only, and are intended to indicate the intent, extent, and general arrangement of work. They are not meant to show every fitting, change of direction or every situation. Verify locations in the field. Work indicated shall be furnished complete to perform the function intended.

3. Carefully coordinate the space requirements and location of piping with the other trade contractors. If coordination fails, conflicts will be decided in favor of the other contractors with this contractor relocating his piping and equipment at no expense to the Owner.

4. This contractor shall make all final plumbing connections to equipment/ fixtures provided by other contractors.

5. For pipe sizes not shown on floor plans: refer to adjacent or enlarged plumbing plans, then appropriate schedules, details, diagrams, specifications, and equipment/ fixture connection sizes. For otherwise indeterminable pipe segments, the size shall be the same as the largest adjacent segment. Pipe sizes are nominal (not O.D.) unless specifically noted otherwise.

6. All piping shall run concealed above ceilings, in walls, in soffits and in chases unless noted otherwise.

7. No structural members shall be cut without approval of the Architect.

8. All plumbing shall be supported from the building structure. All piping 2" and larger shall be supported from the top chord of bar joists. All piping drops to fixtures shall be anchored solid to walls with a steel support bracket with adjustable clip.

9. All water piping shall be installed parallel to building lines and pitched to low points. Provide drain-offs at low points. Piping shall be run neatly grouped together when practical.

10. All piping through roofs, masonry walls and partitions shall have steel pipe sleeves. Openings between pipes and sleeves shall be caulked and sealed smoke and water tight. All pipe penetrations through a fire rated wall or floor shall be cast iron, steel or copper and rated to match the rating of the wall, as per the NFPA.

11. All wall fixtures shall be carrier mounted unless otherwise specified.

12. All storm and domestic water piping, unless buried or specified otherwise, shall be insulated.

13. Run all water piping on warm side of building insulation. No water, waste or storm lines shall be run in exterior walls, unless directly indicated.

14. Provide shock absorbers as shown on drawings and where required to avoid water hammer, sizes shall conform to P.D.I. standards.

15. All sanitary waste piping less than 3" shall pitch down at ¼" per L.F. All 3" and larger piping shall pitch at ⅛" per L.F. whenever possible. The piping main from where it enters the building to the furthest point in the system shall pitch down at ⅛" per L.F. unless indicated otherwise. No sanitary/ waste piping under slab shall be less than 2" in diameter.

ABBREVIATIONS & SYMBOLS

ADA	AMERICANS WITH DISABILITIES ACT
AFF	ABOVE FINISHED FLOOR
AP	ACCESS PANEL
BFF	BELOW FINISHED FLOOR
BFP	BACKFLOW PREVENTER
BLV	BALL VALVE
CI	CAST-IRON
CO	CLEANOUT
CFF	CAPPED FOR FUTURE
CNTR	COUNTER
CTE	CONNECT TO EXISTING
CU	COPPER
CW	COLD WATER
C&HW	COLD & HOT WATER
DAW	DROP AT WALL
DCP	DOMESTIC CIRCULATING PUMP
DF	DRINKING FOUNTAIN
DIC	DROP IN CHASE
DIW	DROP IN WALL
DN	DOWN
DNW	DOWN AT WALL
DNIC	DOWN IN CHASE
DNIW	DOWN IN WALL
DO	DRAINOFF
FCO	FLOOR CLEANOUT
FD	FLOOR DRAIN
FFE	FINISHED FLOOR ELEVATION
FV	FLUSH VALVE
GC	GENERAL CONTRACTOR
GPF	GALLONS PER FLUSH
GV	GATE VALVE
HB	HOSE BIB
HC	HEATING CONTRACTOR
HW	HOT WATER
HWR	HOT WATER RETURN
IDW	INDIRECT WASTE
LV	LAVATORY
MB	MOP BASIN
MTG	MOUNTING
MV	MIXING VALVE
OFC	(DRAWN) OFFSET FOR CLARITY
P	PUMP
PC	PLUMBING CONTRACTOR
PG	PRESSURE GAUGE
PRV	PRESSURE REDUCING VALVE
RAW	RISE AT WALL
RD	ROOF DRAIN
RIC	RISE IN CHASE
RIW	RISE IN WALL
RV	RELIEF VALVE
S	SANITARY WASTE
SA	SHOCK ABSORBER
SH	SHOWER
SK	SINK
SP	SUMP PUMP
SS	STAINLESS STEEL
SW	STORM WATER
T	THERMOMETER
TP	TRAP PRIMER
TYP	TYPICAL
UAW	UP AT WALL
UR	URINAL
UIC	UP IN CHASE
UIW	UP IN WALL
V	VENT
VB	VACUUM BREAKER
VC	VITREOUS CHINA
VIF	VERIFY IN FIELD
VTR	VENT THRU ROOF
W	WASTE
W/	WITH
W/O	WITH OUT
WC	WATER CLOSET
WCO	WALL CLEANOUT

SANITARY PIPING BELOW FLOOR
SANITARY PIPING ABOVE FLOOR
VENT PIPING BELOW FLOOR
VENT PIPING ABOVE FLOOR
STORM WATER PIPING BELOW FLOOR
STORM WATER PIPING ABOVE FLOOR
COLD WATER PIPING
COLD WATER PIPING BELOW FLOOR
110 DEG. HOT WATER PIPING
110 DEG. REGIRC. WATER PIPING
140 DEG. WATER PIPING
FUEL GAS PIPING
ANCHOR
BALL VALVE
LOCKING BALL VALVE
BALL VALVE, ALTERNATE SYMBOL
BALANCING VALVE
GLOBE VALVE
CHECK VALVE
CHECK VALVE
BACKFLOW PREVENTER
RELIEF VALVE
PRESSURE REDUCING VALVE
THERMOMETER
PRESSURE GAUGE
TRAP PRIMER
DROP/RISE IN LINE
LINE UP TO FLOOR ABOVE
TEE -DROP
EXTERIOR HOSE BIB
INTERIOR HOSE BIB
SHOCK ABSORBER
UNION
FLOOR DRAIN
FLOOR CLEANOUT
WALL CLEANOUT

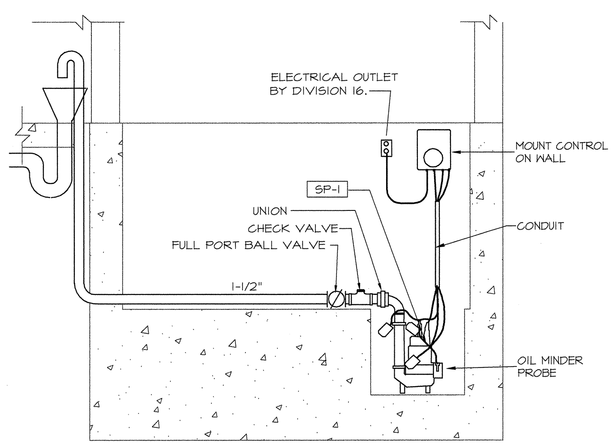

3 / P1 SUMP PUMP DETAIL
SCALE: NONE

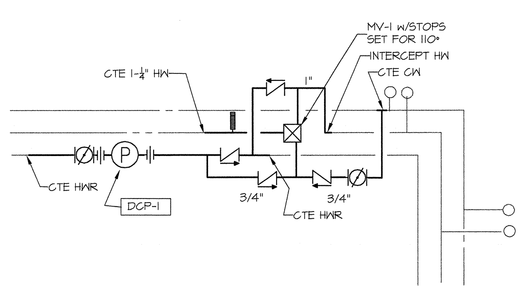

4 / P1 REMOTE PUMP DETAIL
SCALE: NONE

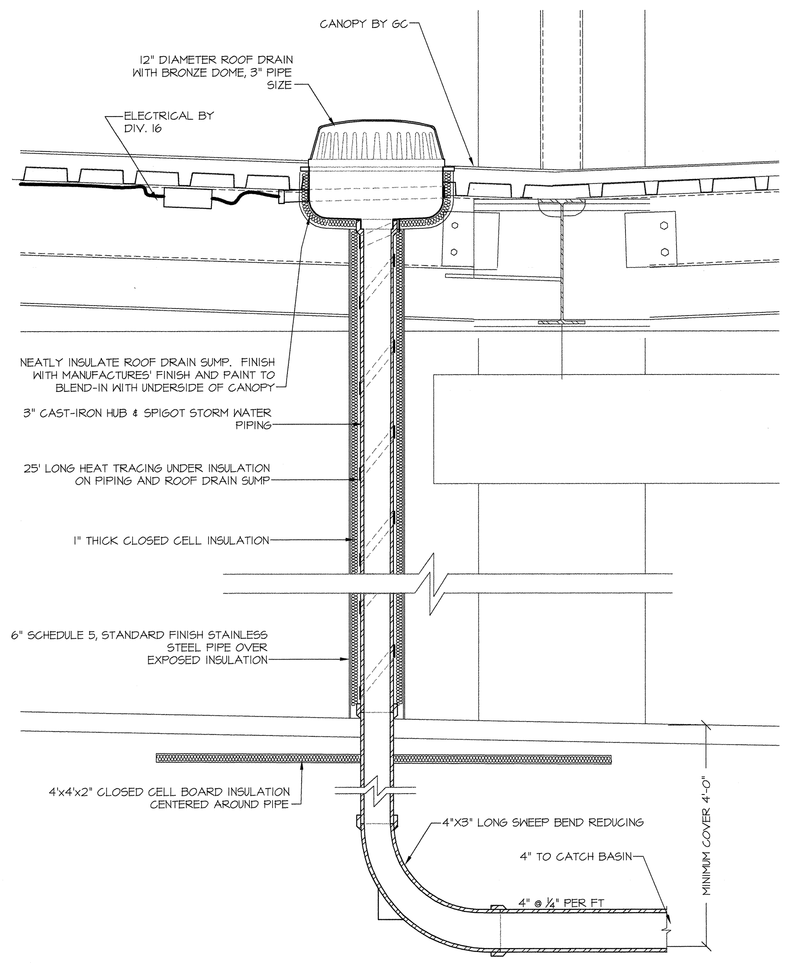

7 / P1 CANOPY DRAIN SECTION DETAIL
SCALE: NONE

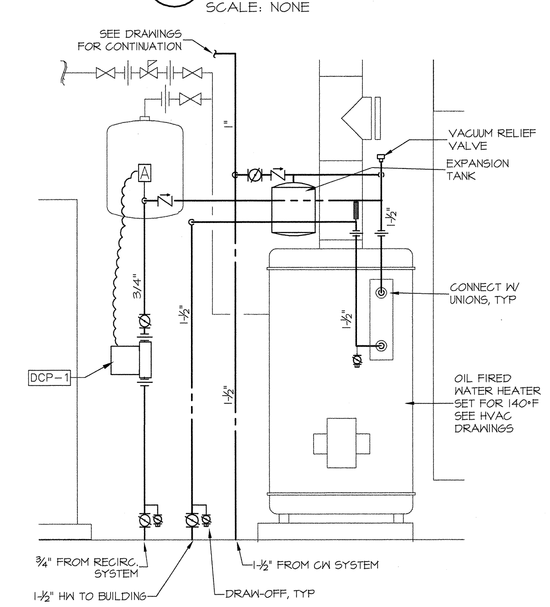

5 / P3 WATER HEATER DETAIL
SCALE: NONE

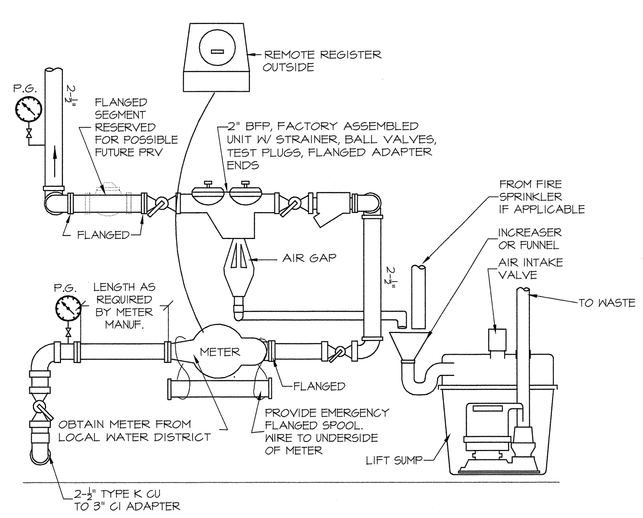

6 / P1 WATER ENTRANCE DETAIL
SCALE: NONE

PLAN NORTH

MECHANICAL SYSTEMS ENGINEERS
ROYAL RIVER CENTER, UNIT #10
PO BOX 1441
YARMOUTH, MAINE 04096
VOICE (207) 846-1441
FAX (207) 846-1442
mechsys@maine.rr.com

REVISN	DESCRIPTION	DATE	APPRV'D
1	CONFORMED DRAWINGS	4/22/04	H.P.
A	ADDENDUM No. 2	3/22/04	H.P.
B	ADDENDUM No. 1	3/10/04	H.P.
0	BID SUBMITTAL	FEB. 26, 2004	H.P.

			CHECKED	DRAWN
			H.P.	E.J.P.
			H.P.	E.J.P.
			H.P.	E.J.P.
			H.P.	E.J.P.
			H.P.	E.J.P.

STATE OF MAINE HERBERT POWERS JR. NO. 2159 REGISTERED PROFESSIONAL ENGINEER

ADDITIONS AND ALTERATIONS:
EASTERLY EXPANSION OF BAGGAGE CLAIM FACILITY
PORTLAND INTERNATIONAL JETPORT, PORTLAND, MAINE

PLUMBING SCHEDULES & NOTES

SCALE : AS NOTED
DATE : FEB. 26, 2004
DESIGNED: E.J.P.
DRAWN : E.J.P.
CHECKED: H.P.
APPROVED:

PDA Architects
Phillip J. Doughty Assoc. • Architects
362 U.S. Route One, Falmouth, Maine 04105 • 207. 781. 5346

PROJ.
SHT
OF
SHEET NO.
P4

THIS DRAWING IS AN INSTRUMENT OF SERVICE AND SHALL REMAIN THE PROPERTY OF PHILLIP J. DOUGHTY ASSOC. ARCHITECTS. IT SHALL NOT BE REPRODUCED, COPIED, LENT OR DISPOSED OF DIRECTLY OR INDIRECTLY NOR USED FOR ANY PURPOSE OTHER THAN FOR WHICH IT IS SPECIFICALLY FURNISHED AND MUST BE RETURNED TO PHILLIP J. DOUGHTY ASSOC. ARCHITECTS ON COMPLETION OF WORK, IF REQUESTED.

April 13, 2004 - 12:26 pm
\\Master1\Projects\0118\Post Bid\0118-P4.dwg