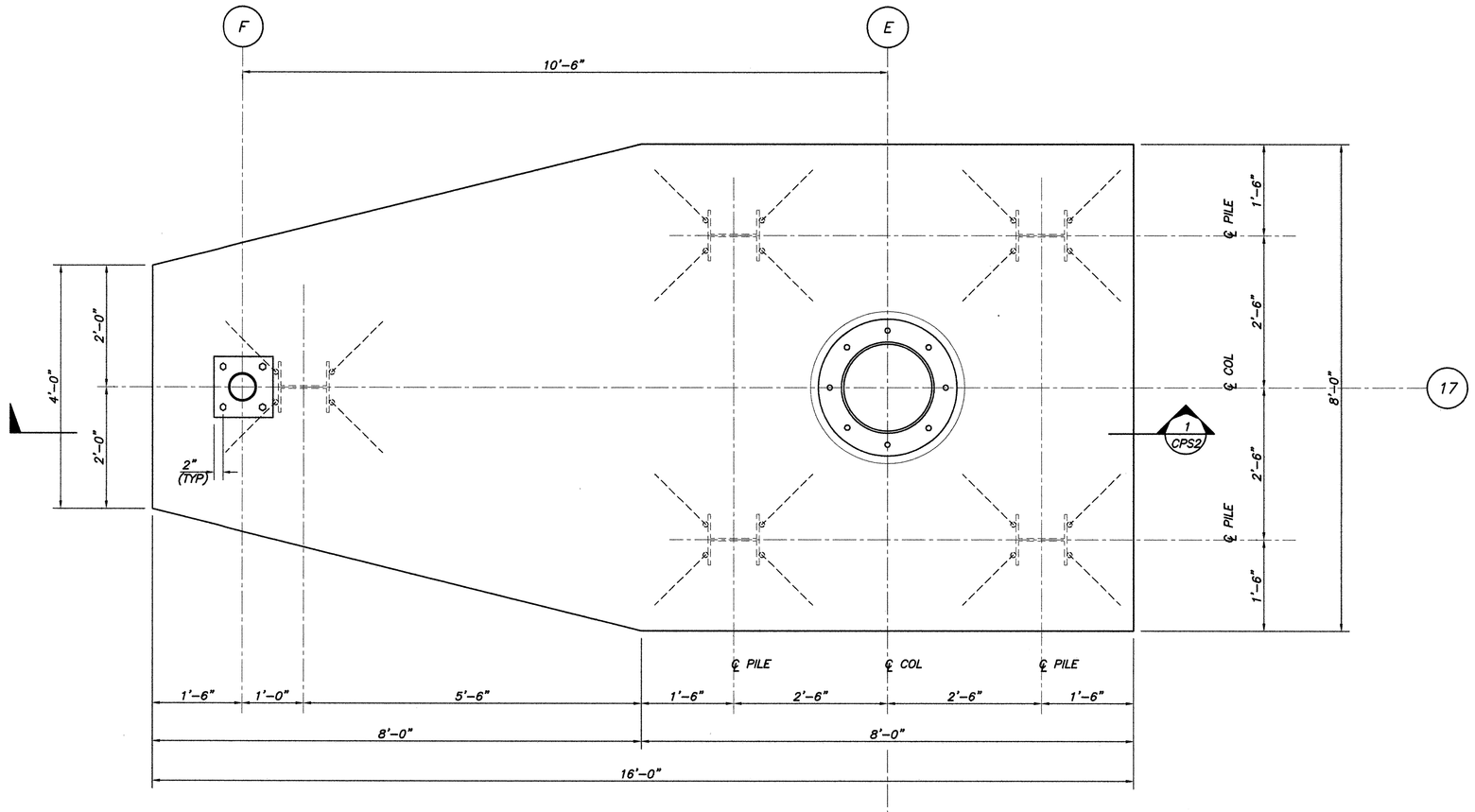

CANOPY PILE CAP PLAN @ COL LINE 17
3/4"=1'-0"

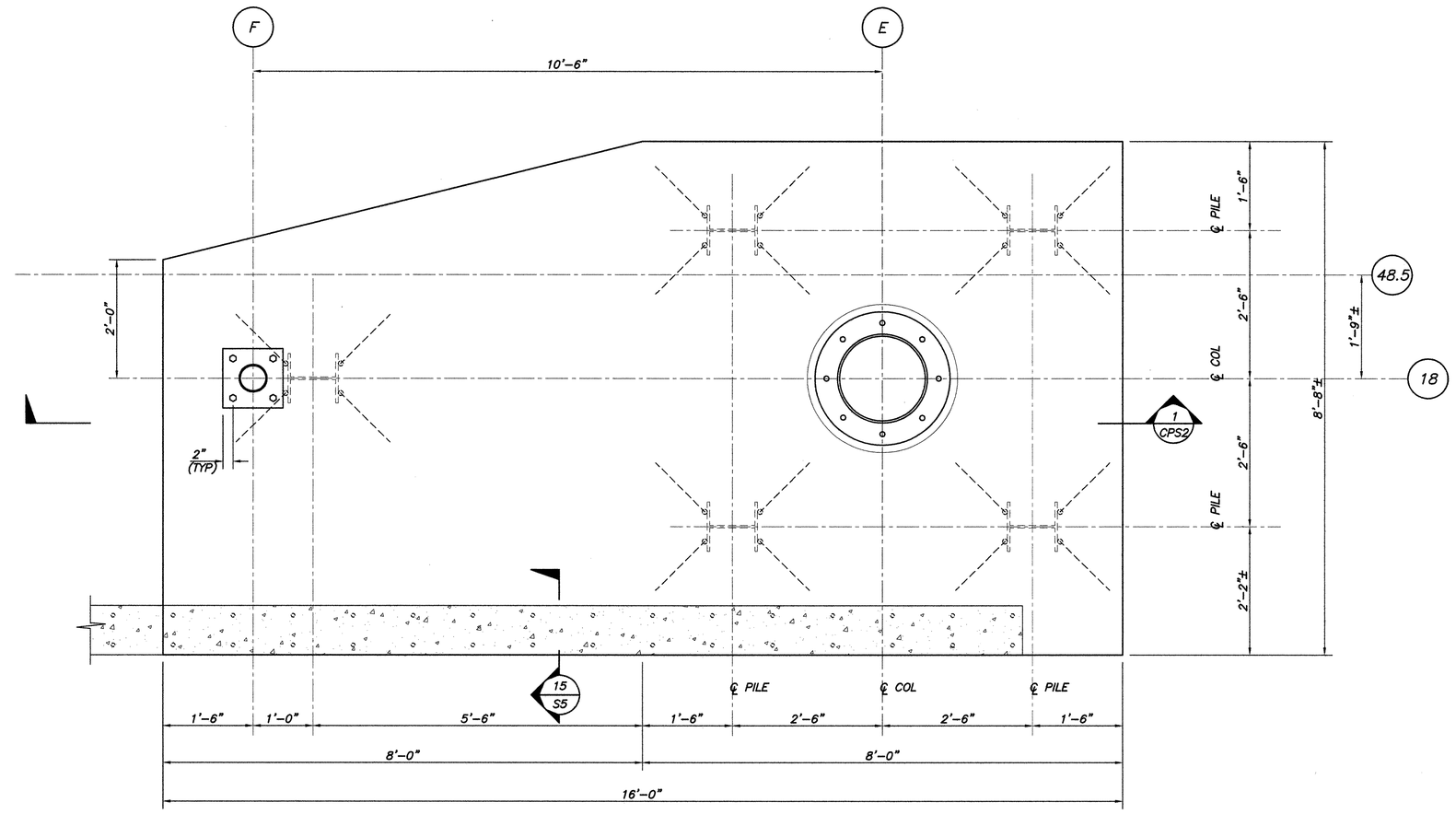

CANOPY PILE CAP PLAN @ COL LINE 18
3/4"=1'-0"

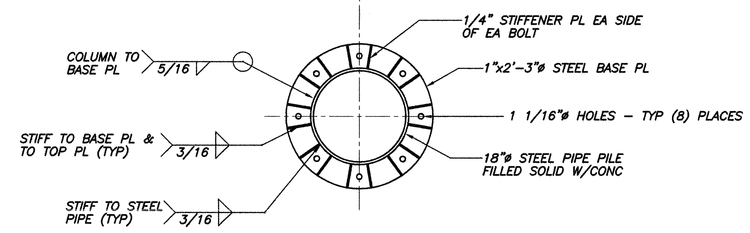

PLAN OF STIFF PLATE ASSEMBLY

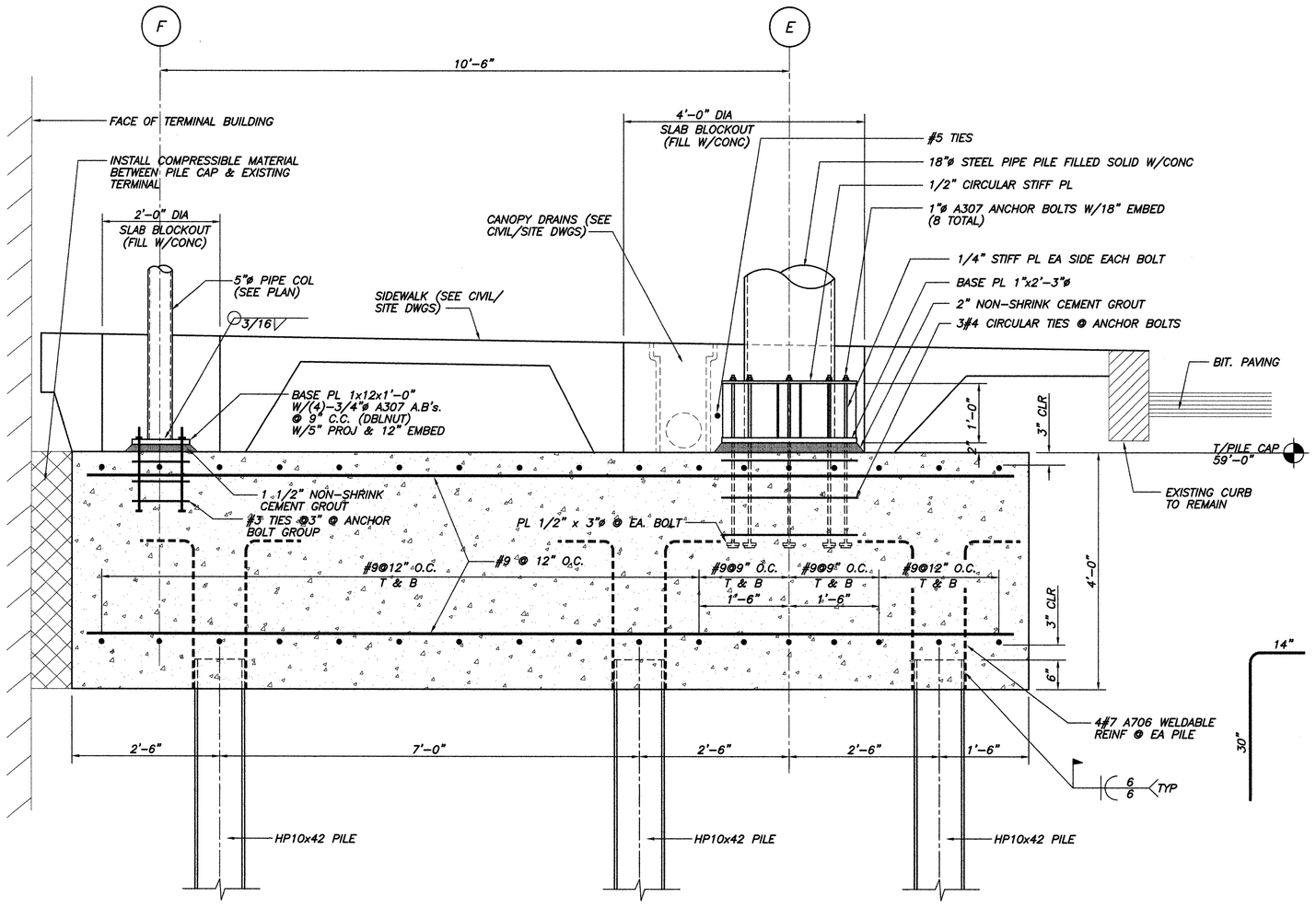

SECTION 1/S2
3/4"=1'-0"

THIS DRAWING IS AN INSTRUMENT OF SERVICE AND SHALL REMAIN THE PROPERTY OF PHILLIP J. DOUGHTY ASSOC. ARCHITECTS. IT SHALL NOT BE REPRODUCED, COPIED, LENT OR DISPOSED OF DIRECTLY OR INDIRECTLY NOR USED FOR ANY PURPOSE OTHER THAN FOR WHICH IT IS SPECIFICALLY FURNISHED AND MUST BE RETURNED TO PHILLIP J. DOUGHTY ASSOC. ARCHITECTS ON COMPLETION OF WORK, IF REQUESTED.

BECKER structural engineers, inc.
75 York Street
Portland, ME 04101-4701
info@beckerstructural.com
Tel 207-879-1838
Fax 207-879-1822
www.beckerstructural.com

REVISN	DESCRIPTION	DRAWN	CHECKED	APPRVD	DATE
1	CONFORMED DRAWINGS ISSUED FOR CONSTRUCTION	APP	SMB		4/22/04
0	BID SUBMITTAL	APP	SMB		FEB 29, 2004

STATE OF MAINE
TODD M. NEAL
9406
REGISTERED PROFESSIONAL ENGINEER
4/22/04

ADDITIONS AND ALTERATIONS:
EASTERLY EXPANSION OF BAGGAGE CLAIM FACILITY
PORTLAND INTERNATIONAL JETPORT, PORTLAND, MAINE

CANOPY FRAMING SECTIONS AND DETAILS

PDA Architects
Phillip J. Doughty Assoc. ◦ Architects
362 U.S. Route One, Falmouth, Maine 04105 ◦ 207. 781. 5346

SCALE : NOTED
DATE : FEB 29, 2004
DESIGNED: SMB
DRAWN : APP
CHECKED: PBB
APPROVED:

PRO. 826.10
SHT
OF
SHEET NO.
CPS2