1/16"=1' 5 0 10 20 30 40ft 1/8"=1' 5 0 5 10 15 20ft 1/4"=1' 2 0 2 4 6 8 10ft 1/2"=1' 1 0 1 2 3 4 5ft 3/4"=1' 1 0 1 2 3ft 1"=1' 1 0 1 2ft 1 1/2"=1' 0 1 2ft 3"=1' 0 1ft

If this sheet is less than 30"x42" in size, it has been reduced. Graphic scales must be adjusted accordingly.

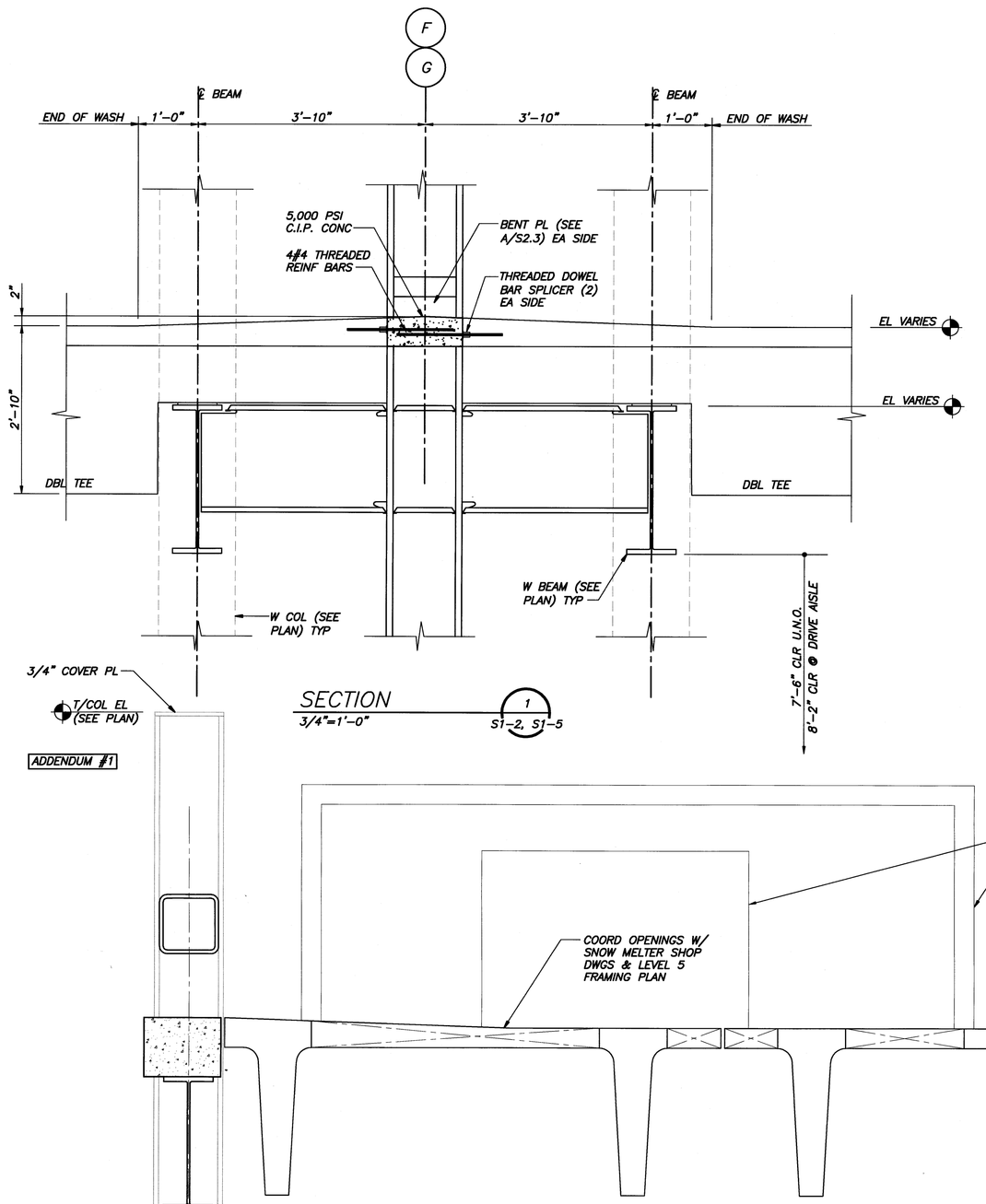

SECTION 1
3/4"=1'-0" S1-2, S1-5

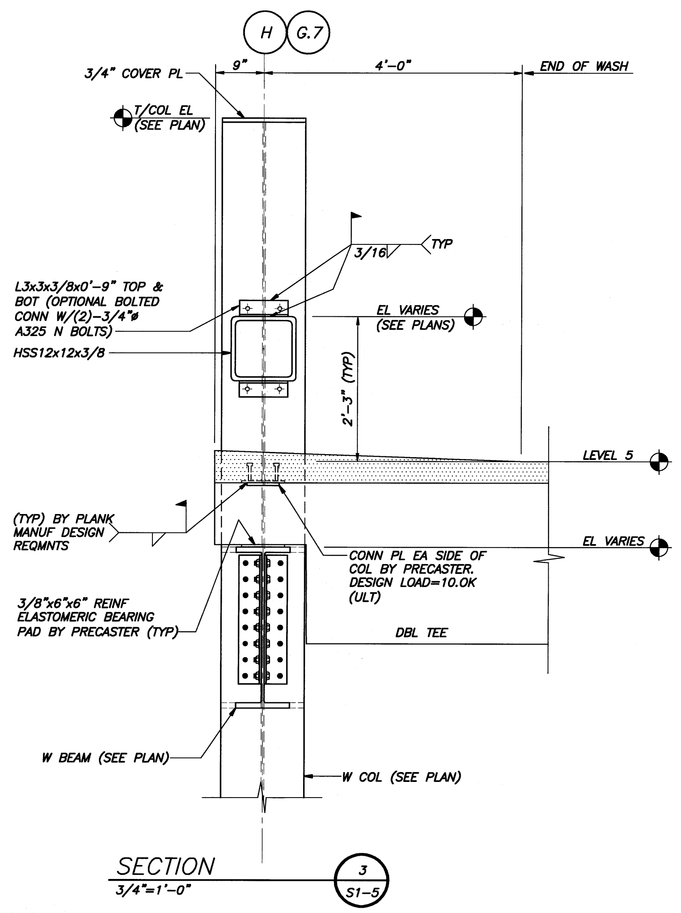

SECTION 3
3/4"=1'-0" S1-5

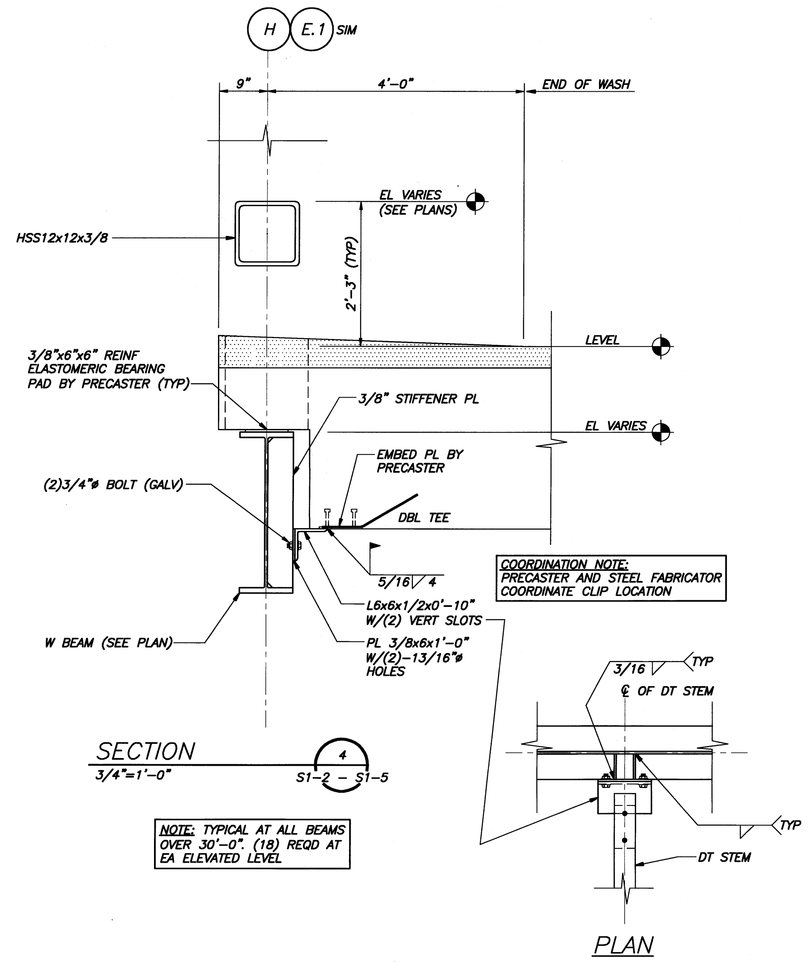

SECTION 4
3/4"=1'-0" S1-2 - S1-5

NOTE: TYPICAL AT ALL BEAMS OVER 30'-0". (18) REQD AT EA ELEVATED LEVEL

PLAN

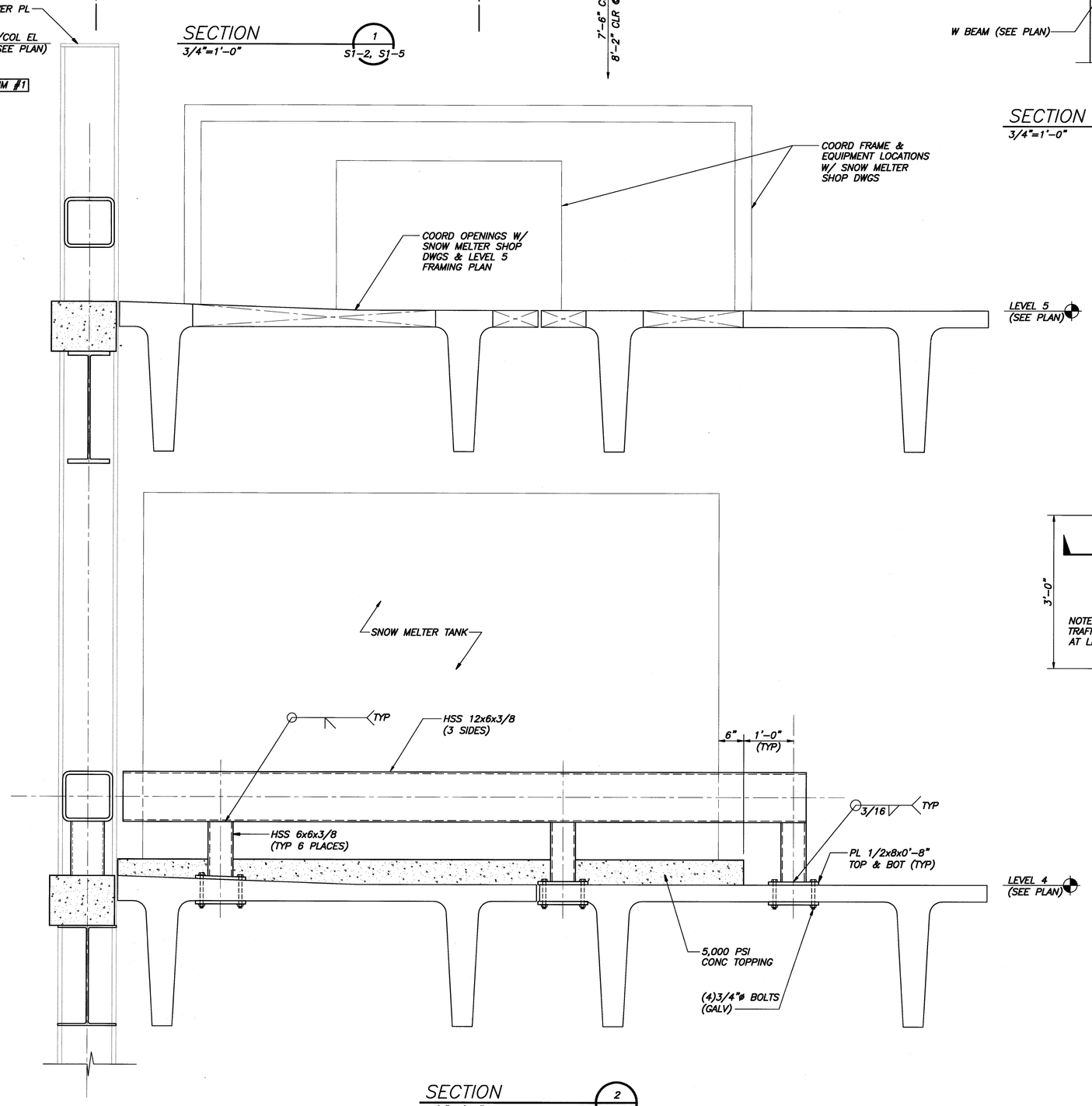

SECTION 2
3/4"=1'-0" S1-4, S1-5

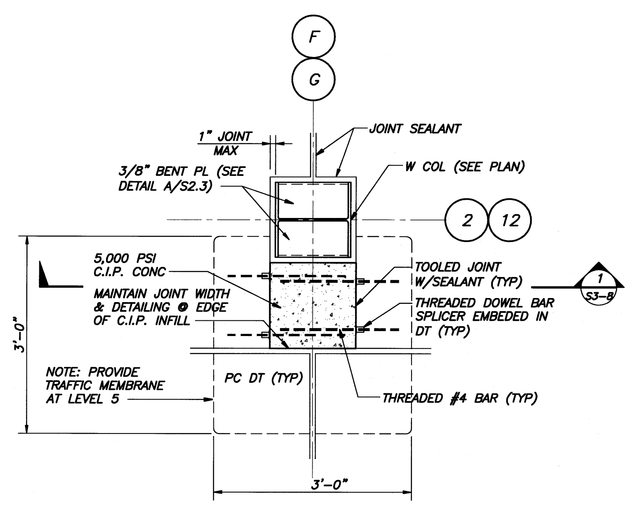

DETAIL A
3/4"=1'-0" S1-2, S1-5

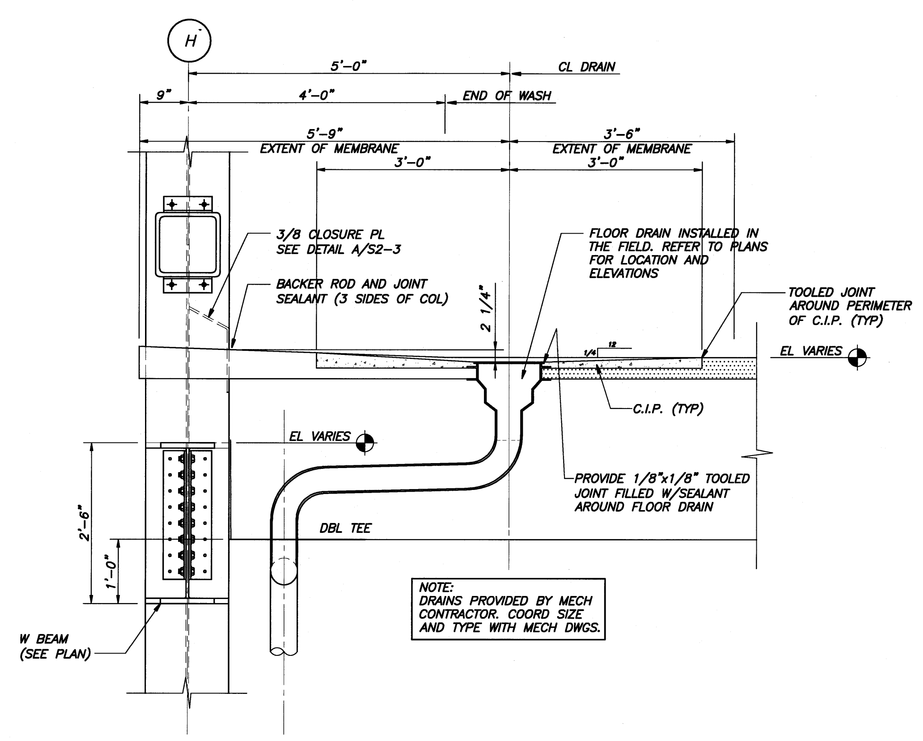

SECTION 5
3/4"=1'-0" S1-2 - S1-5

DOMENECH HICKS & KROCKMALNIC ARCHITECTS
155 Massachusetts Ave.
Boston, MA 02115
617-267-6408
Fax 617-267-1990

BECKER structural engineers, inc.
75 York Street
Portland, ME 04101-4701
info@beckerstructural.com
Tel 207-879-1820
Fax 207-879-1822
www.beckerstructural.com

Conformed-Set, for Field Use

CITY OF PORTLAND
PORTLAND, MAINE

DEPARTMENT OF WATERFRONT AND TRANSPORTATION

PWM

PORTLAND INTERNATIONAL JETPORT

PHASE II
PARKING GARAGE

1001 WESTBROOK ST.,
PORTLAND, MAINE

No.	Date	Revision

Title
CANOPY SECTIONS & DETAILS

Scale: NOTED
File Name: .
Drawn By: APP
Checked By: TMN
Job No.: 1456
Date: 2/25/2008

STATE OF MAINE TODD M. NEAL NO.9406 LICENSED PROFESSIONAL ENGINEER

Drawing No.
S3-8