1/16"=1' 5 0 10 20 30 40ft 1/8"=1' 5 0 5 10 15 20ft 1/4"=1' 2 0 2 4 6 8 10ft 1/2"=1' 1 0 1 2 3 4 5ft 3/4"=1' 1 0 1 2 3ft 1"=1' 1 0 1 2ft 1 1/2"=1' 0 1 2ft 3"=1' 0 1ft

If this sheet is less than 30"x42" in size, it has been reduced. Graphic scales must be adjusted accordingly.

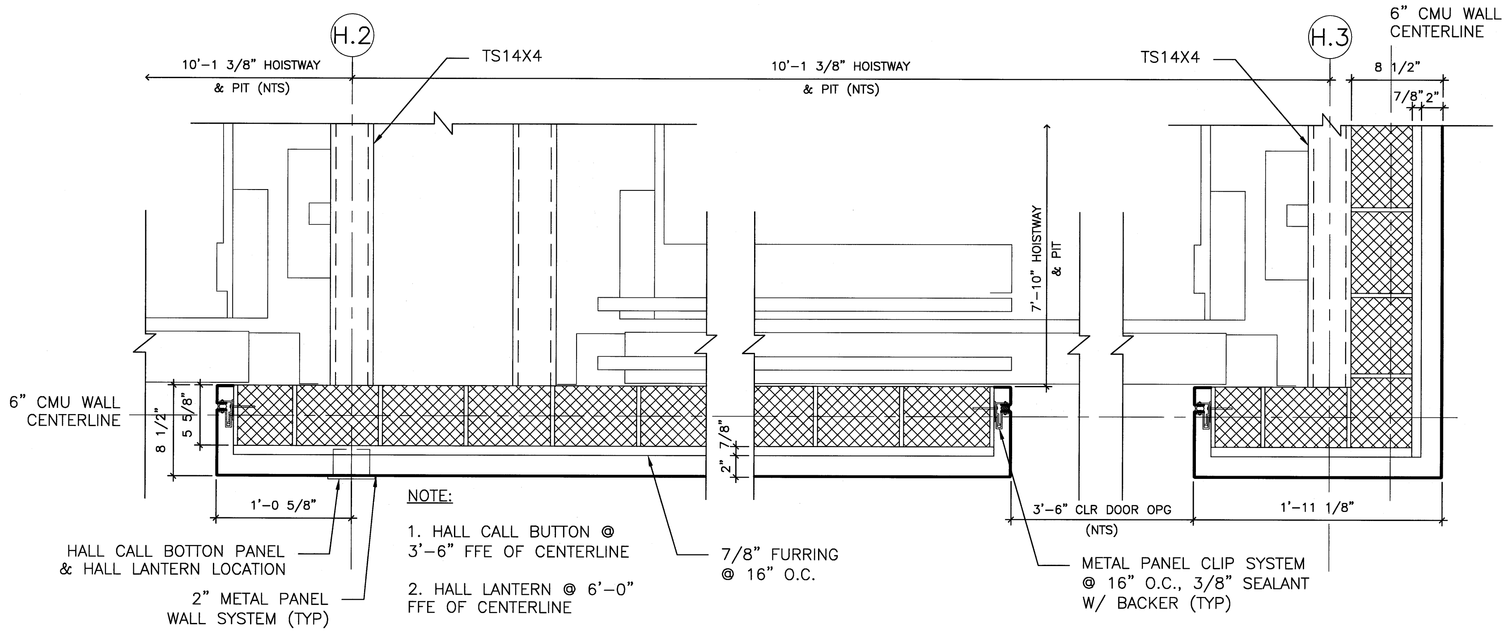

NOTE:

1. HALL CALL BUTTON @ 3'-6" FFE OF CENTERLINE
2. HALL LANTERN @ 6'-0" FFE OF CENTERLINE

1 TYPICAL JAMB & CORNER ELEVATOR DETAIL – PLAN AT LEVEL 1
SCALE 1 1/2" = 1'-0"

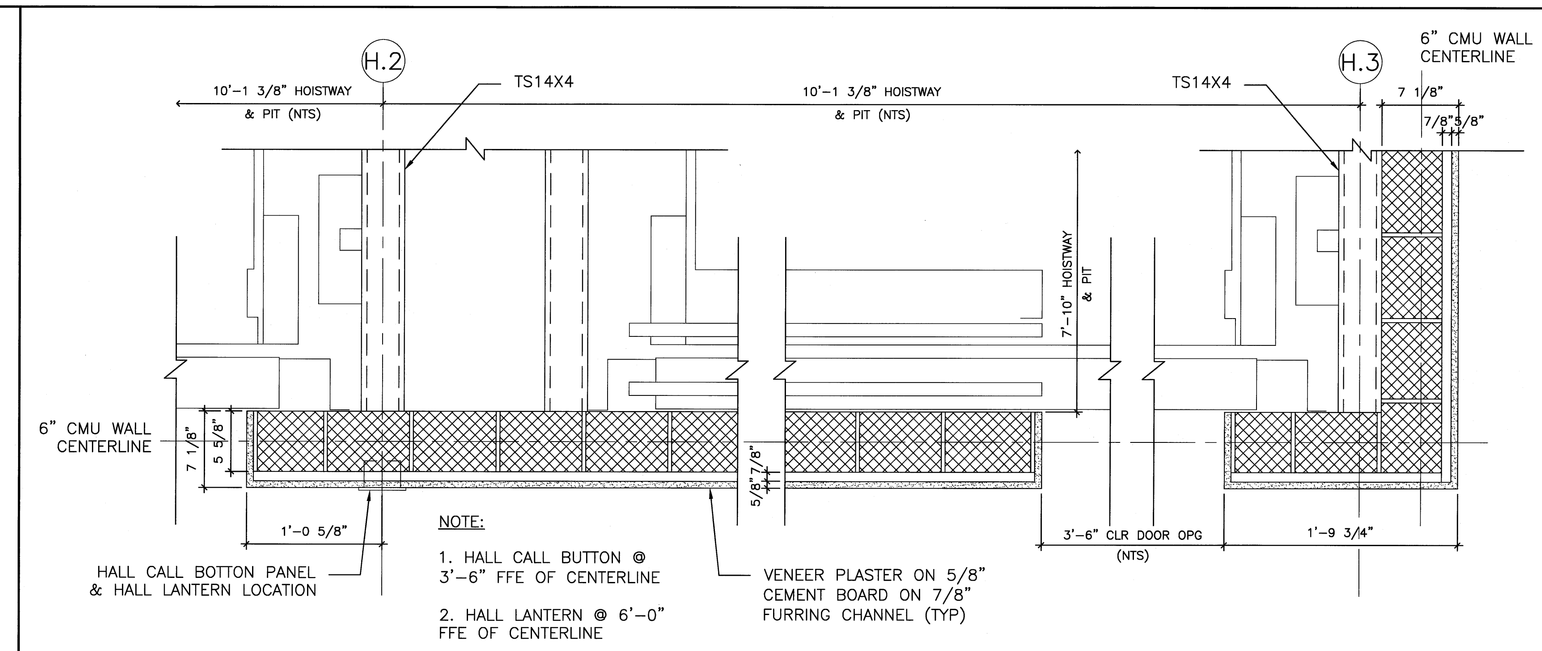

NOTE:

1. HALL CALL BUTTON @ 3'-6" FFE OF CENTERLINE
2. HALL LANTERN @ 6'-0" FFE OF CENTERLINE

6 TYPICAL JAMB & CORNER ELEVATOR DETAIL – PLAN AT LEVEL 2 TO 5
SCALE 1 1/2" = 1'-0"

NOTE:

ADEQUATE SUPPORT AT ALL FASTENING POINTS OF ENTRANCE ASSEMBLY REQUIRED

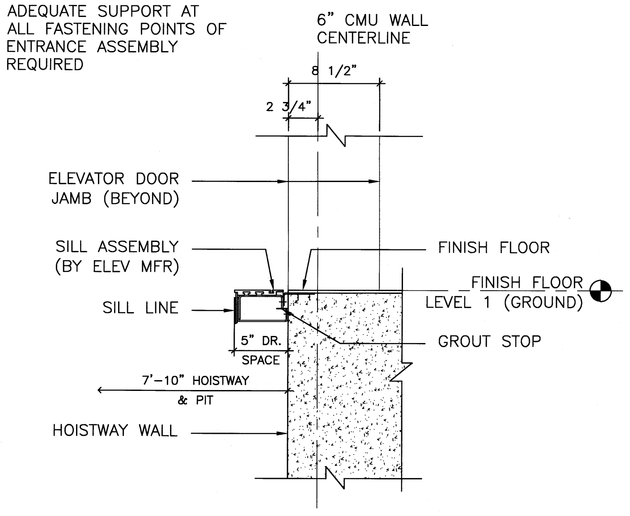

2 TYPICAL SILL DETAIL – AT LEVEL 1
SCALE 1 1/2" = 1'-0"

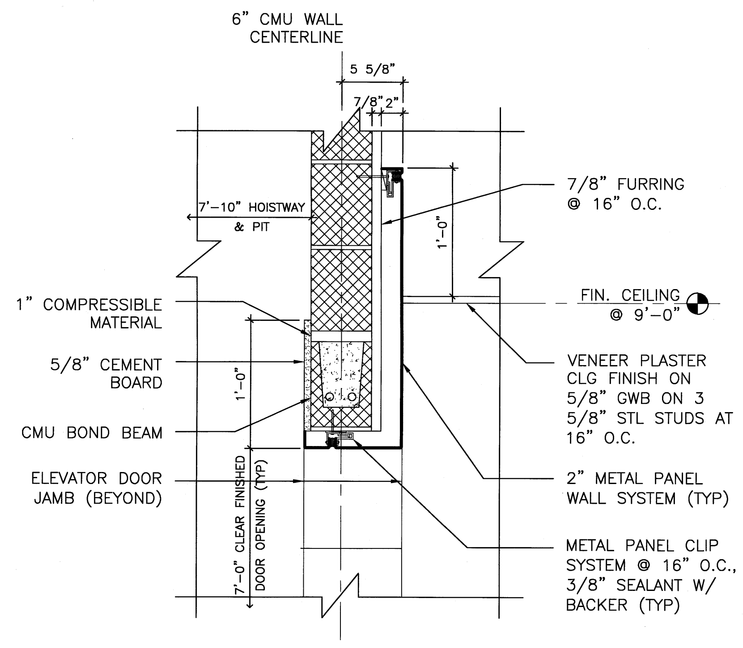

4 TYPICAL HEAD DETAIL – AT LEVEL 1
SCALE 1 1/2" = 1'-0"

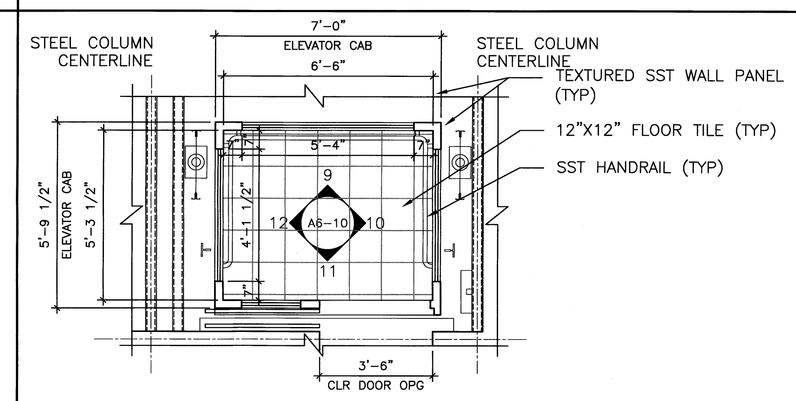

7 TYPICAL ELEVATOR CAB PLAN
SCALE: 3/8" = 1'-0"

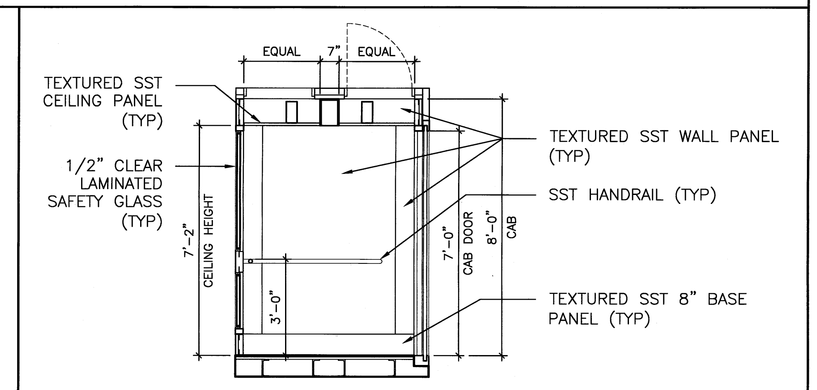

10 ELEVATOR CAB ELEVATION B
SCALE: 3/8" = 1'-0"

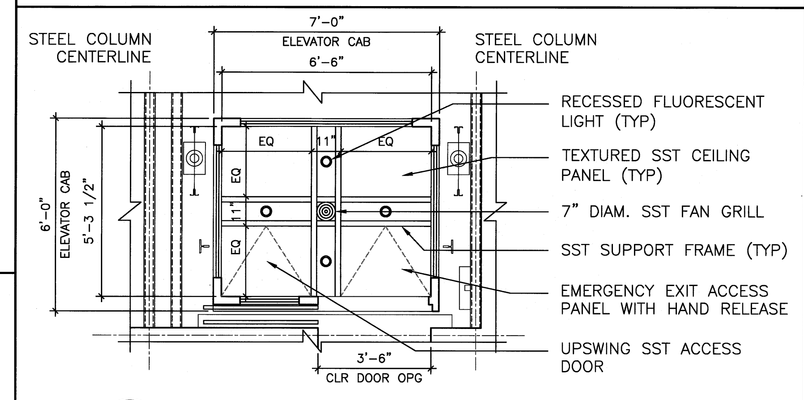

8 TYP. REFLECTED CLG. ELEVATOR CAB PLAN
SCALE: 3/8" = 1'-0"

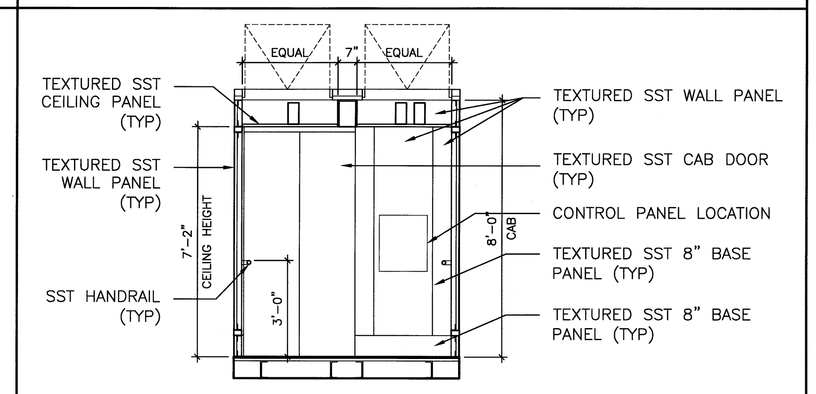

11 ELEVATOR CAB ELEVATION C
SCALE: 3/8" = 1'-0"

NOTE:

ADEQUATE SUPPORT AT ALL FASTENING POINTS OF ENTRANCE ASSEMBLY REQUIRED

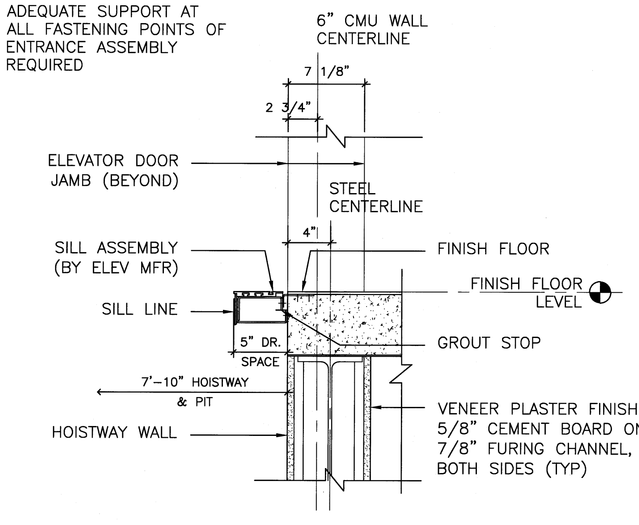

3 TYPICAL SILL DETAIL – AT LEVEL 2 TO 5
SCALE 1 1/2" = 1'-0"

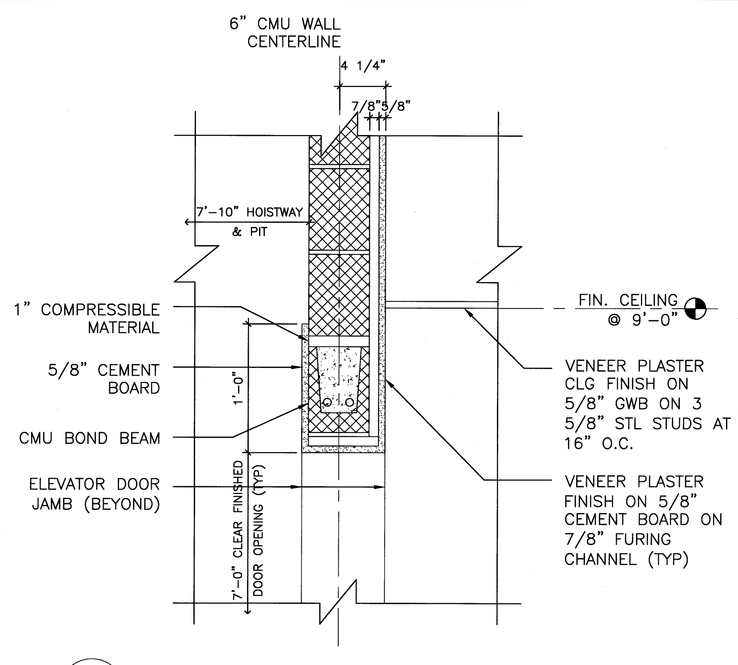

5 TYPICAL HEAD DETAIL – AT LEVEL 2 TO 5
SCALE 1 1/2" = 1'-0"

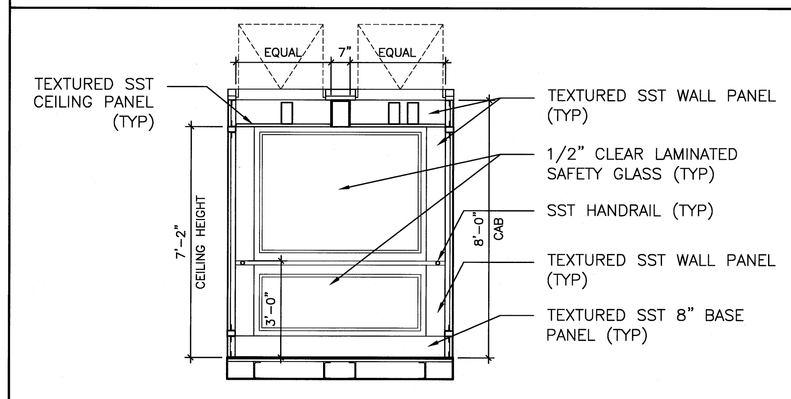

9 ELEVATOR CAB ELEVATION A
SCALE: 3/8" = 1'-0"

12 ELEVATOR CAB ELEVATION D
SCALE: 3/8" = 1'-0"

NOTE:

ELEVATION D IS SAME AS ELEVATION B MIRRORED, SEE DETAIL 10/A6-10

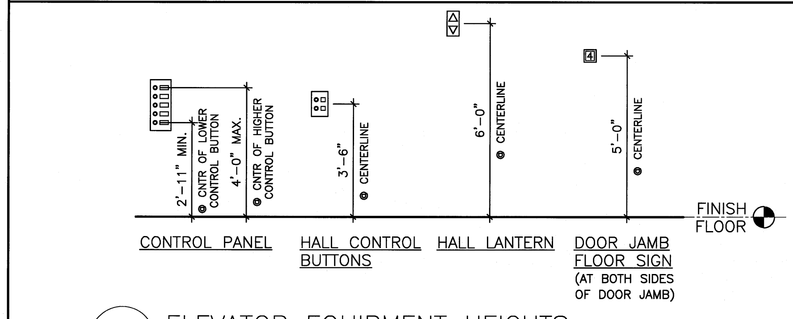

13 ELEVATOR EQUIPMENT HEIGHTS
SCALE: 3/8" = 1'-0"

DOMENECH HICKS & KROCKMALNIC ARCHITECTS
155 Massachusetts Ave.
Boston, MA 02115
617-267-6408
Fax 617-267-1990

CONFORMED SET FOR FIELD USE

CITY OF PORTLAND
PORTLAND, MAINE

DEPARTMENT OF WATERFRONT AND TRANSPORTATION

PIM

PORTLAND INTERNATIONAL JETPORT

PHASE II
PARKING GARAGE

1001 WESTBROOK ST.,
PORTLAND, MAINE

No.	Date	Revision

Title
STAIR / ELEVATOR TOWER ELEVATOR DETAILS

Scale: VARIES
File Name: A6-10
Drawn By: ML
Checked By: GK
Job No.: 2608
Date: 2/25/08
Drawing No.: A6-10