EQUIPMENT SCHEDULE

	EQUIPMENT			ELECTRICAL							PLUMBING							GAS			
	ITEM	QTY.	DESCRIPTION	CONN.	VOLT	PH.	AMPS	H.P.	K.W.	HGT.	DRAIN	I.W.	W	HGT.	C.W	H.W	HGT.	CONN. SIZE	MBTU	HGT.	REMARKS
THE SHIPYARD	103	1	DRAIN BOARD - PERFORATED / FRONT BAR								FS	1/2"									FEC TO COORDINATE INSTALLATION OF DRAIN PAN W/ MILLWORK FABRICATOR. DRAIN PAN TO BE CENTERED IN SERVER PICK-UP STATION, ITEM 101.
	105	2	SODA GUN								FS	1/2"									
	106	1	POUR STATION - 60"	J.B.	120	1	15.0			24"	FS	(3) 1/2"									E.C. TO CONNECT DUPLEX RECEPTACLE TO JUNCTION BOX BEHIND BLENDING STATION.
	109A	2	DRIP TRAY								FS	1/2"									FEC TO COORDINATE INSTALLATION IN FRONT BAR WITH BAR FABRICATOR.
	111	1	BAR SINK - (4) COMPARTMENT / 96"								FS	(6) 1/2"			1/2"	1/2"	18"				
	113	1	HAND SINK - BAR								FS	1-1/2"			1/2"	1/2"	18"				
	114	1	POUR STATION - 60"	J.B	120	1	15.0			24"	FS	(3) 1/2"									E.C. TO CONNECT DUPLEX RECEPTACLE TO JUNCTION BOX BEHIND BLENDING STSTION.
	118	1	COFFEE BREWER	C & P	120	1	15.0		1.4	54"					3/8"						WATER FEED FROM WATER FILTER BY VENDOR.
BACK OF HOUSE	200	3	HAND SINK - NARROW								DIR.		1-1/2"	18"	1/2"	1/2"	18"				
	204	1	HOT FOOD TABLE - (2) WELL	NEMA 6-15P	208	1	8.32		1.73	24"	FS	1-1/2"			1/2"		18"				
	216	1	PREP TABLE W/ SINK - 72"								FS	2"			1/2"	1/2"	18"				
	227	1	MOP SINK								DIR		3"		1/2"	1/2"	36"				
	231	1	POT SINK - (3) COMPARTMENT / 90"								FS	(3) 2"			(2) 1/2"	(2) 1/2"	18"				
	233	1	DISHMACHINE - LOW TEMP	J.B.	120	1	15.0 est.	3/4		84"	FS	2"				3/4"	84"				
	234	1	SOILED DISHTABLE								FS	(2) 2"			3/4"	3/4"	18"				

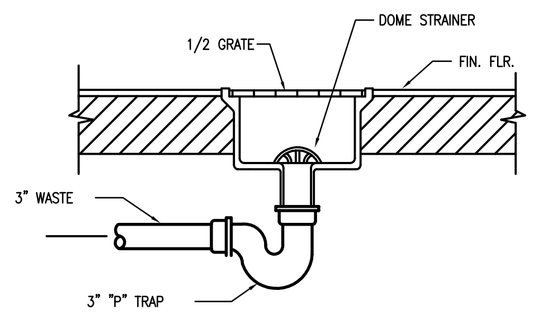

NOTE:
1. PROVIDE WITH TRAP PRIMER CONNECTION

1 FLOOR SINK DIAGRAM NTS

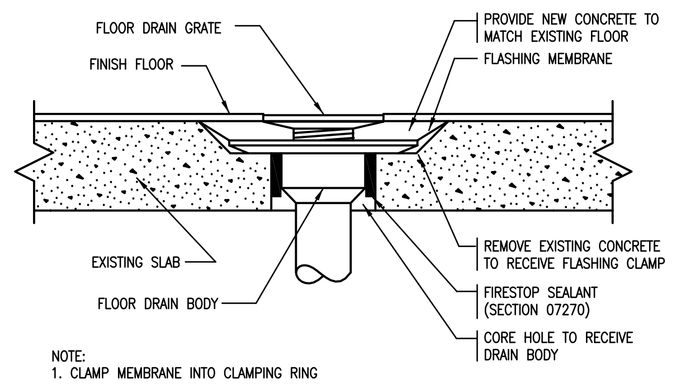

NOTE:
1. CLAMP MEMBRANE INTO CLAMPING RING

2 FLOOR DRAIN INSTALLATION (EX. SLAB) NTS

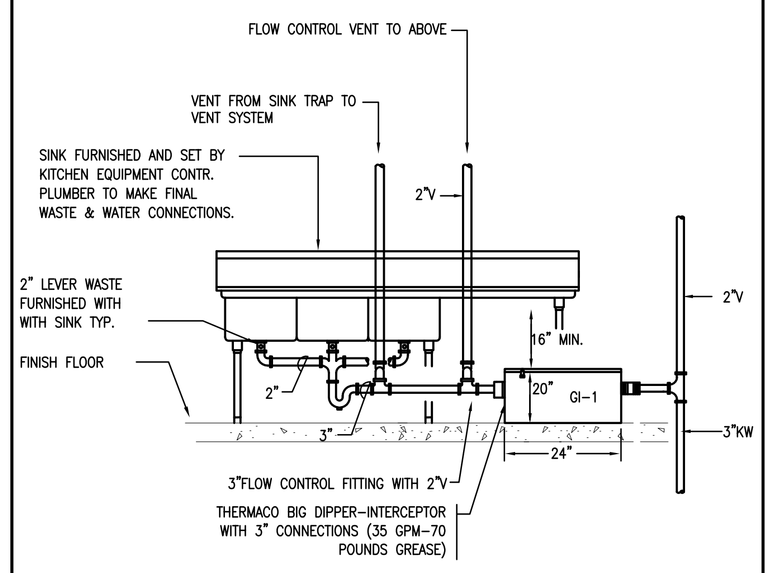

NOTES:
1. GREASE INTERCEPTOR TO BE INSTALLED UNDER DRAINBOARD AGAINST WALL AS INDICATED ON PLUMBING FLOOR PLAN DRAWINGS
2. SEE PLUMBING FLOOR PLANS FOR WATER CONNECTIONS

3 POT SINK W/ GREASE INTERCEPTOR GI-1 NTS

PLUMBING LEGEND

ETR	LIGHT LINE INDICATES EXISTING PIPING TO REMAIN.
RE	REMOVE EXISTING PIPING
CTE	CONNECT TO EXISTING
V&C	VALVE & CAP
CW	COLD WATER
HW	HOT WATER
W	SOIL OR WASTE BELOW FLOOR OR BURIED
KW	KITCHEN WASTE
GV	GREASE VENT
V	VENT
G	NATURAL GAS
SOV	SHUT-OFF VALVE
W & T	WASTE & TRAP
CO	CLEANOUT PLUG
FCO	FLUSH FLOOR CLEANOUT
	CAPPED PIPE
	ARROW INDICATES DIRECTION OF FLOW
.01	ARROW INDICATES DIRECTION OF SLOPE
6 / P-1	DIAGRAM NO. & DWG. NO. REFERENCE
FD "A"	FLOOR DRAIN & TYPE
VTR	VENT THRU ROOF
INV	INVERT
TYP	TYPICAL
NTS	NOT TO SCALE
W & V	WASTE AND VENT
AFF	ABOVE FINISHED FLOOR
AFG	ABOVE FINISHED GRADE
LPC	LIMIT OF PLUMBING CONTRACT
NIPC	NOT IN PLUMBING CONTRACT
GC	GENERAL CONTRACTOR
PC	PLUMBING CONTRACTOR

Item	Date

THE SHIPYARD BREWING COMPANY
86 Newbury Street
Portland, ME 04101
(800) 789-0684

The Shipyard
Main Terminal - Lower Level
Portland International Jetport
1001 Westbrook Street
Portland, ME 04102

HMS Host
6600 Rockledge Drive
Bethesda, MD 20817
Ph: (240) 694-4693
Fax: (240) 694-4175

L2M Foodservice Design Group
811 Cromwell Park Drive
Suite 113
Glen Burnie, MD 21061
ph: (410) 863-1302
fx: (410) 863-1308

Building Engineering Resources, Inc.
28 Main Street, Bldg. #3A
North Easton, MA 02356
T: (508) 230-0260
F: (508) 230-0265
E: ber@ber-engineering.com

LLOYD ARCHITECTS
Two High Cliff, Plymouth MA 02360
TEL: (508)746-4646
FAX: (508)746-1236
E-MAIL: info@lloydarch.com

Job No.: 07417

Scale: As Noted

Issued: 12/11/07

Plumbing Legend, Details, & Schedules

P1