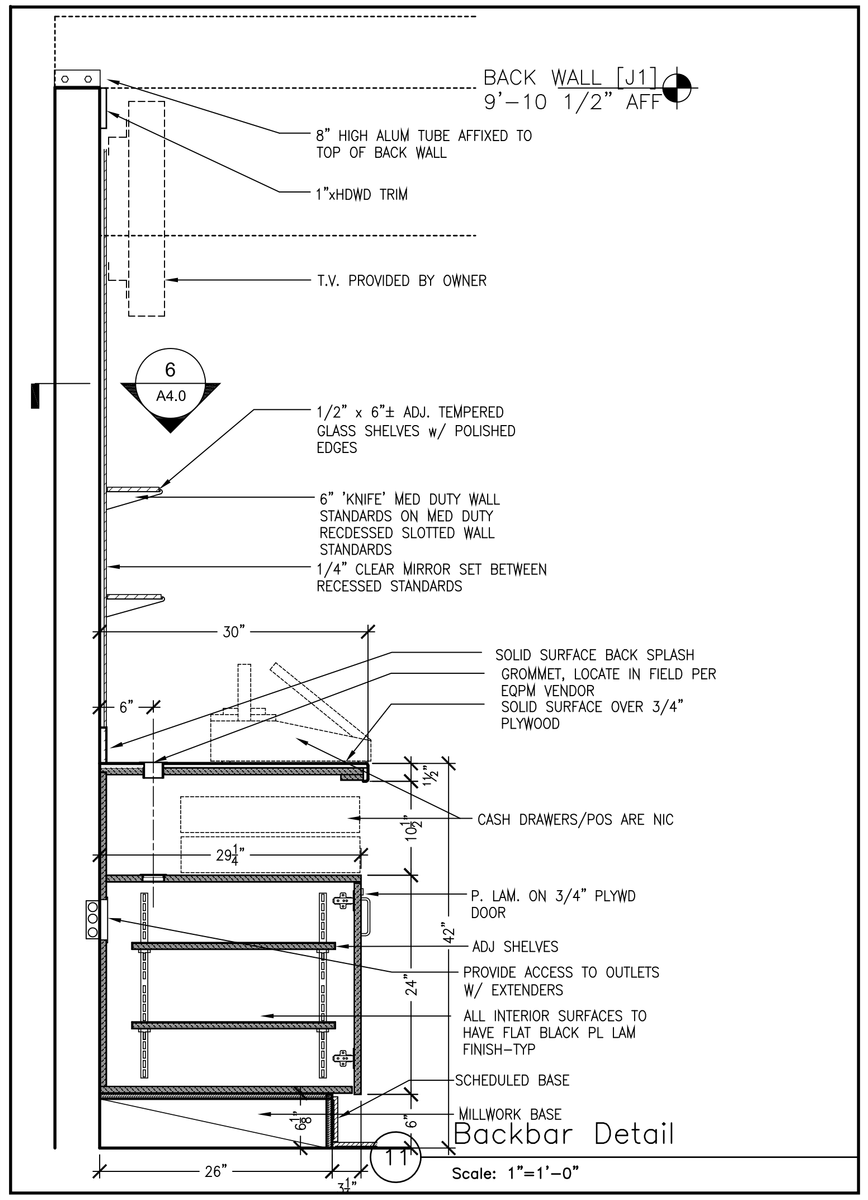

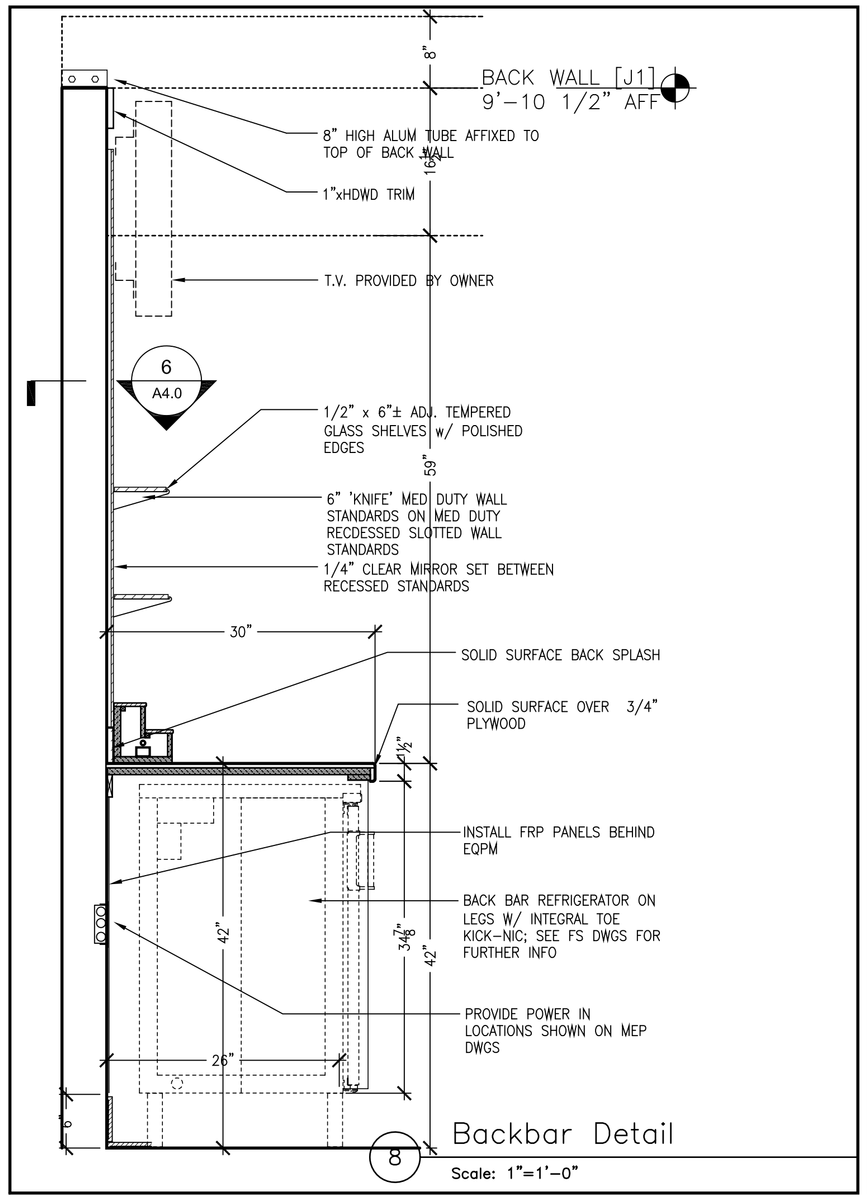

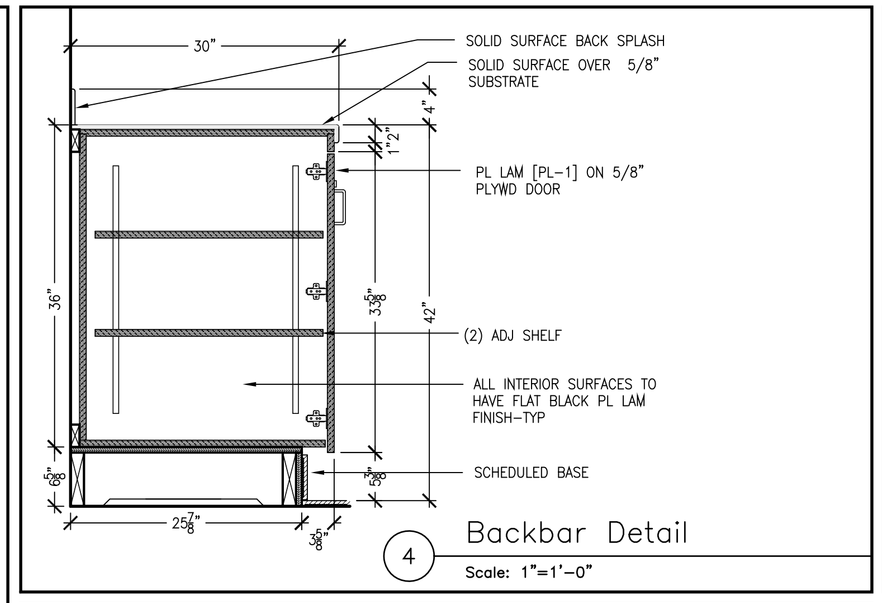

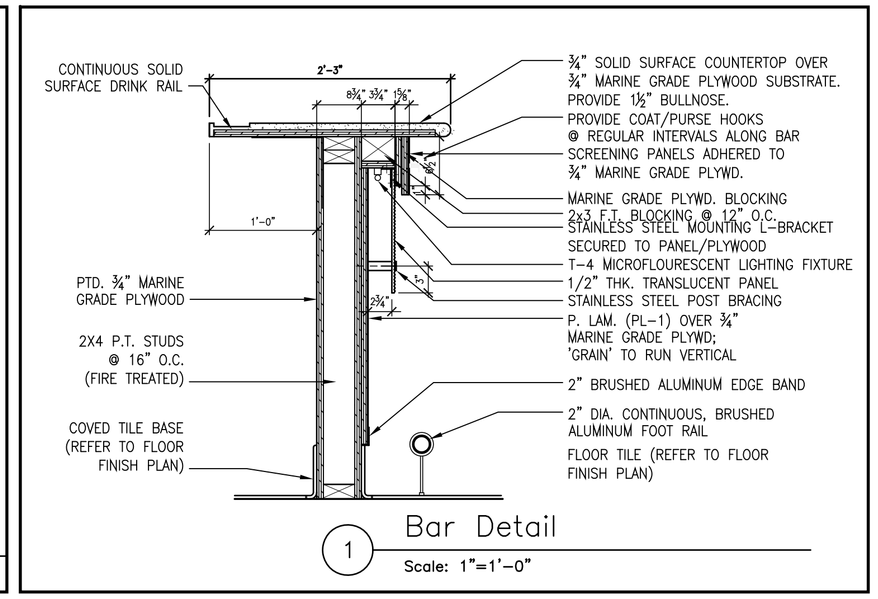

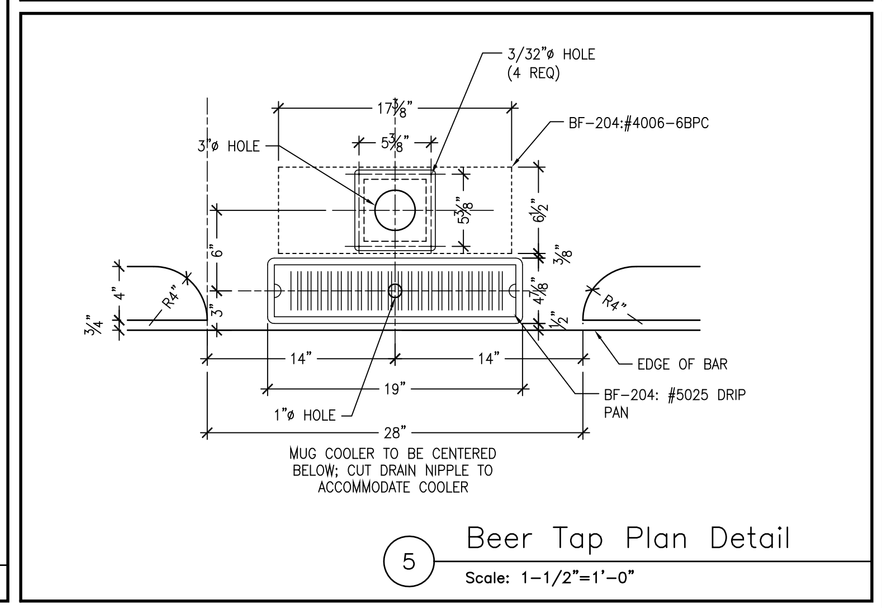

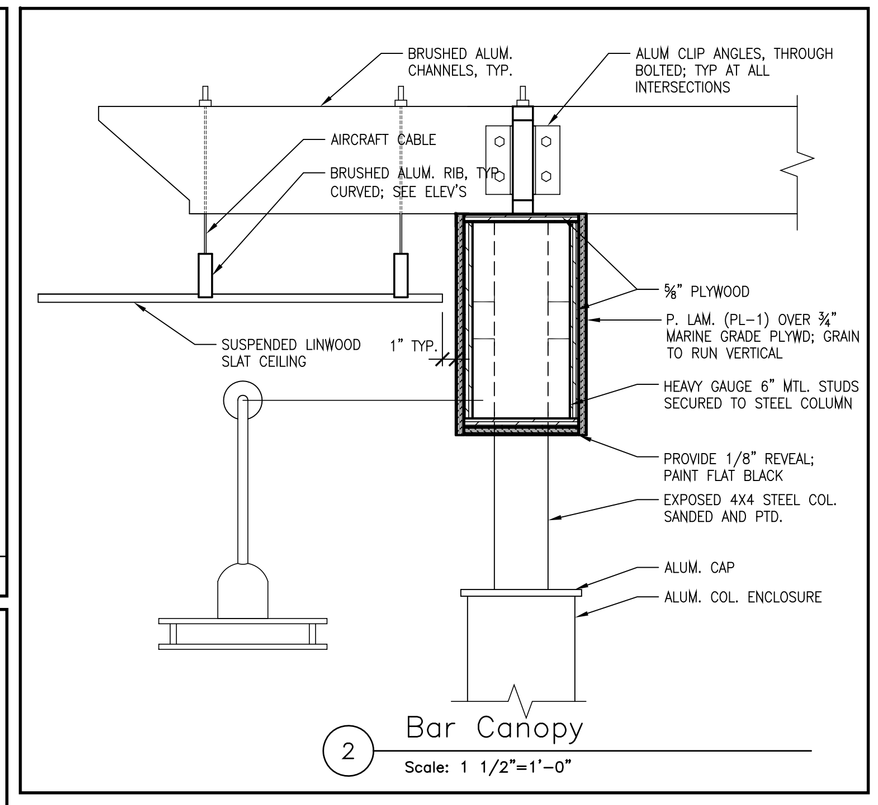

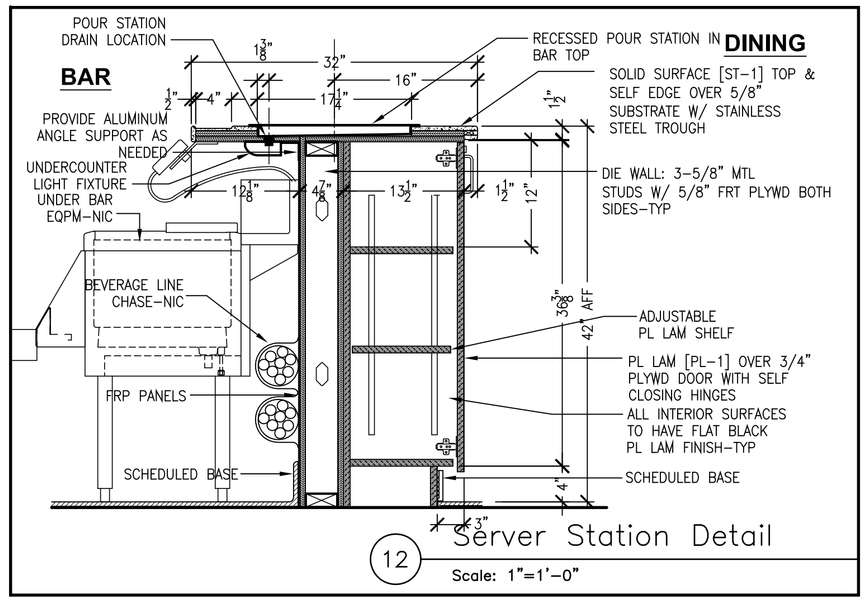

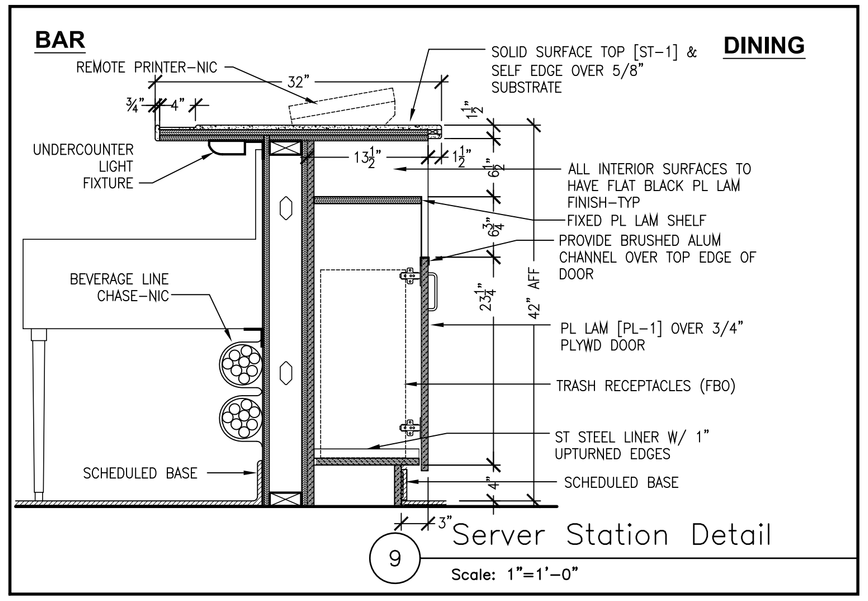

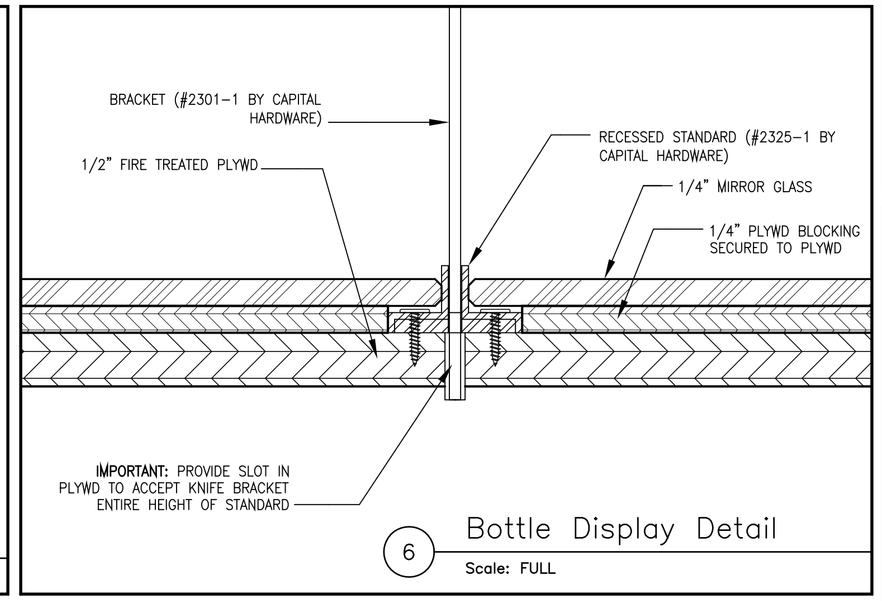

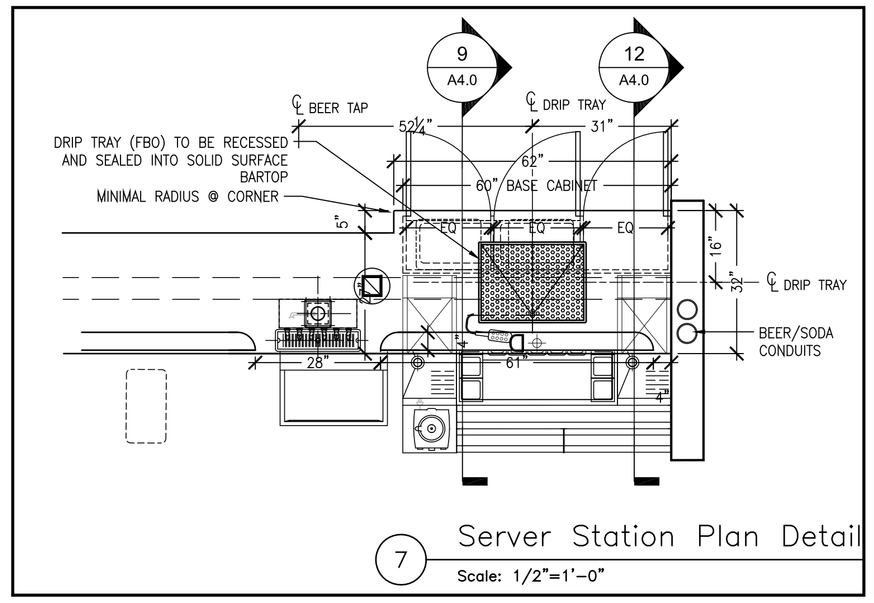

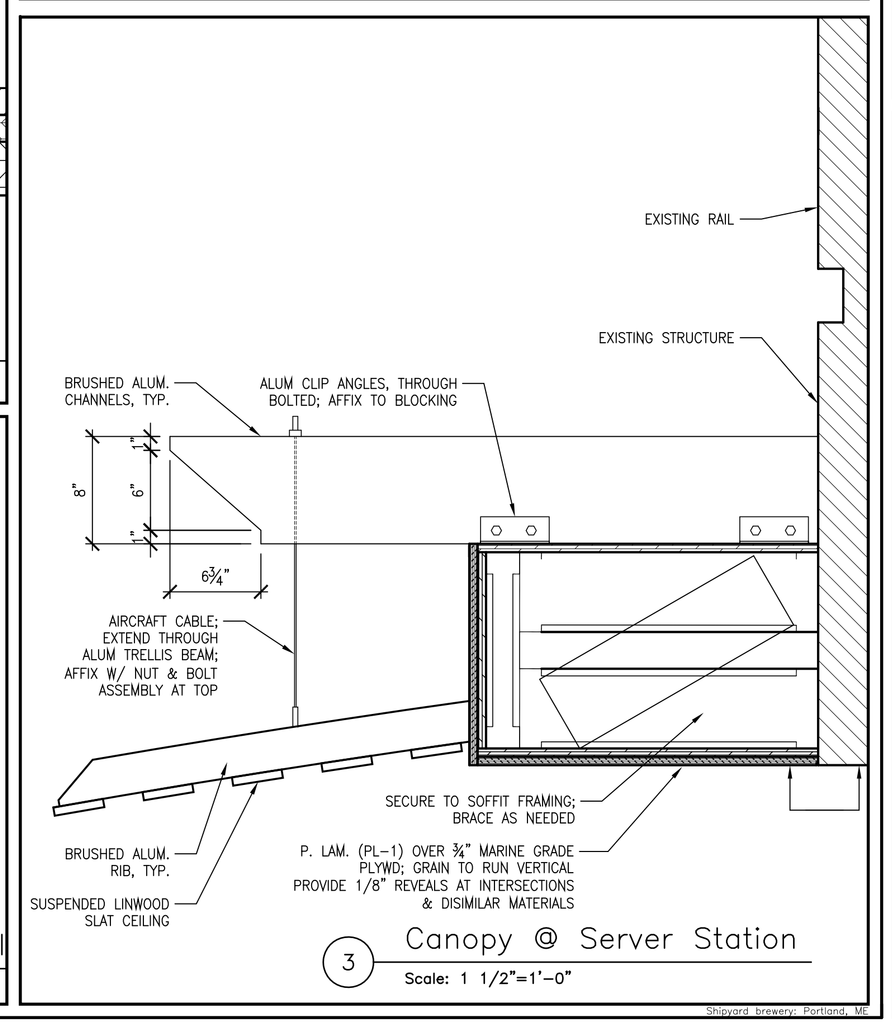

Shipyard brewery: Portland, ME

Item	Date
Progress	12/06/07

THE SHIPYARD BREWING COMPANY
86 Newbury Street
Portland, ME 04101
(800) 789-0684

The Shipyard
Main Terminal - Lower Level
Portland International Jetport
1001 Westbrook Street
Portland, ME 04102

HMS HOST

HMS Host
6600 Rockledge Drive
Bethesda, MD 20817
Ph: (240) 694-4693
Fax: (240) 694-4175

L2M Foodservice Design Group
811 Cromwell Park Drive
Suite 113
Glen Burnie, MD 21061
ph: (410) 863-1302
fx: (410) 863-1308

Building Engineering Resources, Inc.
28 Main Street, Bldg. #3
North Easton, MA 02356
T: (508) 230-0260
F: (508) 230-0256
E: ber@ber-engineering.com

LLOYD ARCHITECTS
Two High Cliff, Plymouth MA 02360
TEL: (508) 746-4646
FAX: (508) 746-1236
E-MAIL: info@lloydarch.com

Job No.: 07417

Scale: As noted

Issued: 12/11/07

Details

A4.0