ROOM FINISH SCHEDULE

ROOM NO.	ROOM NAME	FLOOR	BASE	WALL NORTH	WALL EAST	WALL SOUTH	WALL WEST	CEILING MATL	CEILING HEIGHT	ROOM NO.	REMARKS
2100	MEZZANINE	–	RB	*	–	–	–	–	–	2100	* REFERENCE ROOM FINISH SCHEDULE NOTE# 2
2116	MOP CLOSET	CT	RB	GWB–1 / PT	GWB–1 / PT	GWB–1 / PT	GWB–1 / PT	ACT	8'–0"	2116	
2117	MENS ROOM	CT	CT	RE RFS NOTE# 1	GWB–1 / CT	GWB–1 / CT	GWB–1 / CT	ACT	8'–0"	2117	
2117A	MENS ROOM FOYER	CARPET	CT	RE RFS NOTE# 1	RE RFS NOTE# 1	RE RFS NOTE# 1	RE RFS NOTE# 1	ACT	8'–0"	2117A	
2118	WOMENS ROOM	CT	CT	RE RFS NOTE# 1	GWB–1 / CT	GWB–1 / CT	GWB–1 / CT	ACT	8'–0"	2118	
2118A	WOMENS ROOM FOYER	CARPET	CT	RE RFS NOTE# 1	RE RFS NOTE# 1	RE RFS NOTE# 1	RE RFS NOTE# 1	ACT	8'–0"	2118A	
2119	MOP CLOSET	CT	RB	GWB–1 / PT	GWB–1 / PT	GWB–1 / PT	GWB–1 / PT	ACT	8'–0"	2119	

G1 A–3 ROOM FINISH SCHEDULE

ROOM FINISH SCHEDULE NOTES:

1. AREAS OF GWB WALLS WITH CERAMIC TILE OVERLAY SHALL HAVE GWB–1. AREAS OF GWB WALLS WITH PAINT FINISH ONLY (WHERE TILE IS WAINSCOT HEIGHT) SHALL HAVE GWB–2.
2. PATCH AS REQUIRED TO MATCH EXISTING. APPLY ALL NEW FINISHES (PAINT, ACROVYN, CHAIR RAIL, ETC.) TO ENTIRE LENGTH OF WALL.

DOOR SCHEDULE NOTES:

1. REMOVE EXISTING DOOR PASSAGE HARDWARE. INSTALL PANIC HARDWARE

DOOR SCHEDULE

DOOR NO.	DOOR SIZE	DOOR MATL	DOOR ELEV	FRAME MATL	FRAME ELEV	FRAME HEAD	FRAME JAMB	FRAME SILL	HARD WARE	MIN FIRE RATING	DOOR NO	REMARKS
101	2'–0"x 7'–0"	MTL	J1–B	MTL *	J1–A	F1–A	F1–B	NA	RE SPEC	NA	101	FRAME SHALL BE WELDED
102	2'–0"x 7'–0"	MTL	J1–B	MTL *	J1–A	F1–A	F1–B	NA		NA	102	FRAME SHALL BE WELDED
-	EXISTING DOOR	EXIST	–	MTL *	–	–	–	–		–	–	* RE DSN# 1

J1 A–3 DOOR SCHEDULE

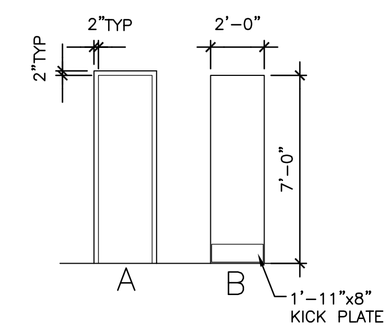

J1 A–3 DOOR & FRAME ELEVATIONS
1/4" = 1'–0"

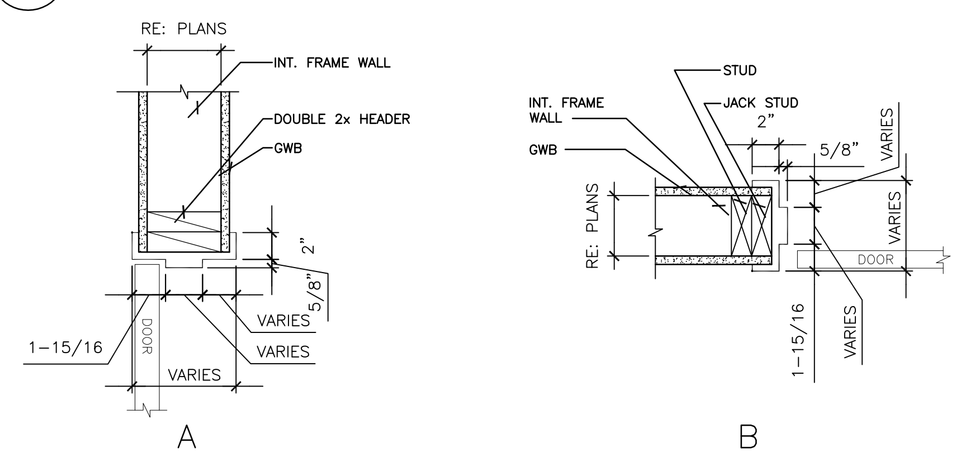

F1 A–3 DOOR HEAD & JAMB DETAILS
1/4" = 1'–0"

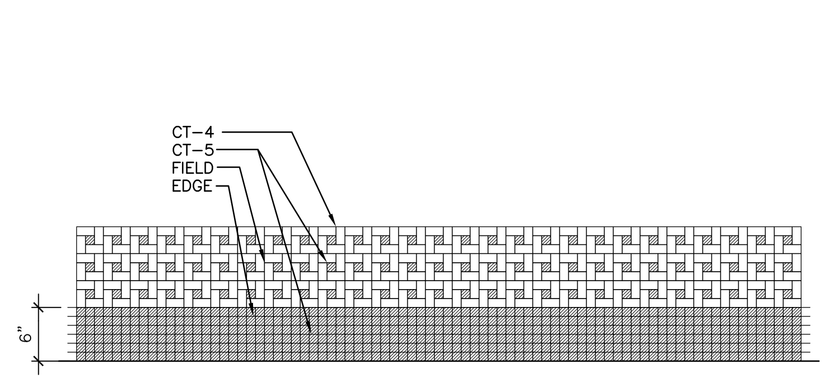

F6 A–3 FLOOR TILE PATTERN
1" = 1'–0"

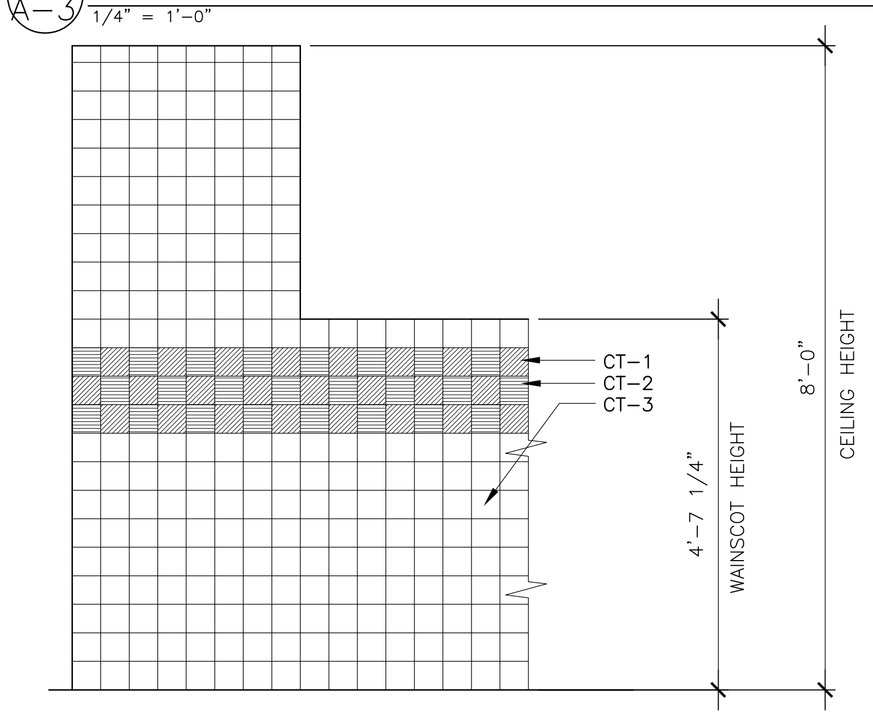

F6 A–3 WALL TILE PATTERN
1/2" = 1'–0"

SHEET NOTES:

1. SEE SHEET T–1 FOR LEGEND, ABBREVIATIONS & GENERAL NOTES.
2. RE SPECIFICATIONS FOR ADDITIONAL INFORMATION REGARDING FINISH MATERIALS.
3. ALL GWB WALLS TO BE PAINTED UNO.
4. RUBBER BASE SHALL HAVE A FEATHERED EDGE.

KEY

ACT–1	2'x2' ACOUSTIC CEILING TILE
CT	CERAMIC TILE
GWB–1	5/8" WATER–RESISTANT GYPSUM WALLBOARD
GWB–2	5/8" ABUSE–RESISTANT GYPSUM WALLBOARD
PNT	PAINT
RB	RUBBER BASE
ACR	ACROVYN

CT KEY

CT–1	SEMI– GLOSS BLUE
CT–2	SEMI– GLOSS GRAY
CT–3	SEMI– GLOSS PEPPER WHITE
CT–4	UNGLAZED PORCELAIN PEPPER WHITE
CT–5	UNGLAZED PORCELAIN BLUE

General Notes

ISSUED FOR CONSTRUCTION
2/25/08

No.	Revision/Issue	Date

Facilities & Engineering
1001 Westbrook ST
Portland, ME 04102
207–874–8877

Project Name and Address

UPPER LEVEL BATHROOM RENOVATIONS

Sheet Title

ROOM FINISH SCHEDULE, DOOR SCHEDULE, DETAILS, TILE PATTERNS

Project Number: 08–1001

Date: Issued For Construction 2/25/08

Scale: Reference Individual Drawings

Sheet: A–3