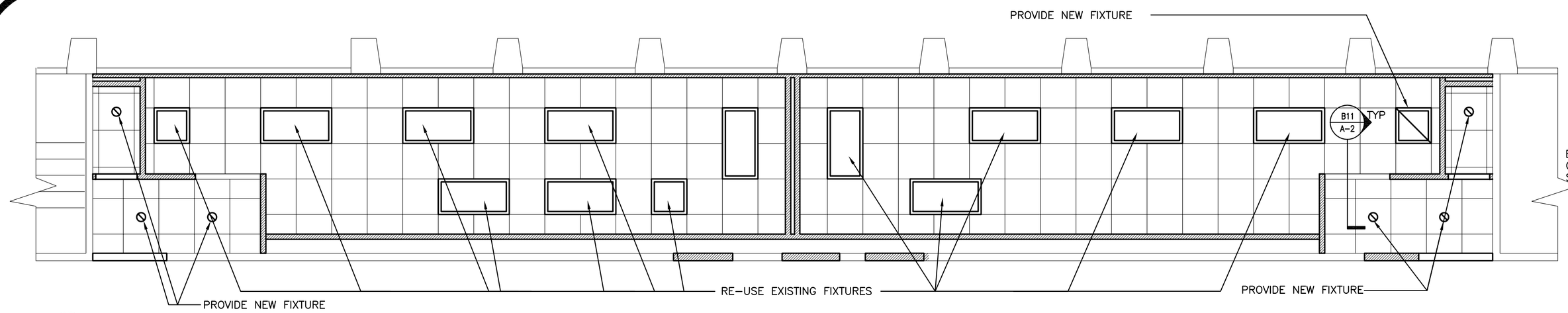

K1 / A-2 REFLECTED CEILING PLAN
1/4" = 1'-0"

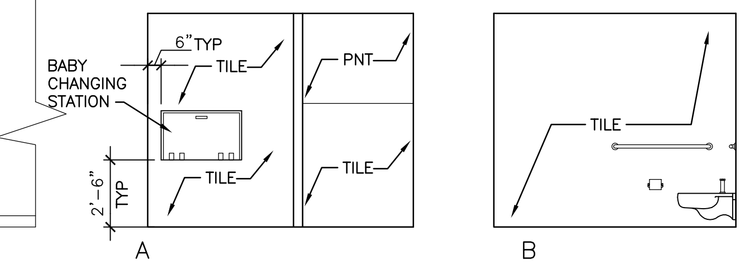

K10 / A-2 INTERIOR ELEVATIONS: EAST& WEST WALLS, FOYERS
1/4" = 1'-0"

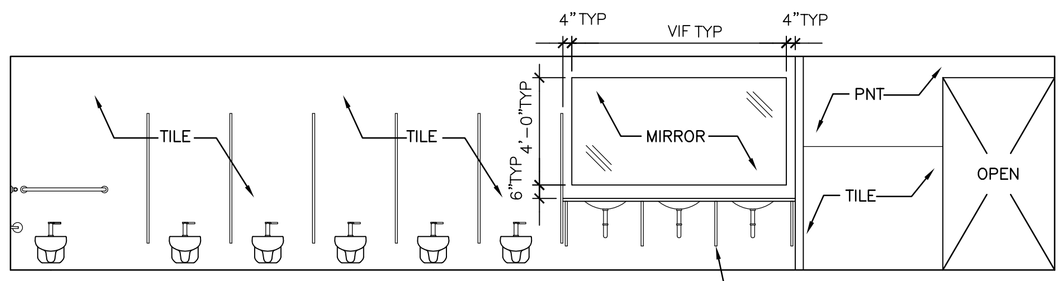

4 SINK BRACES PER COUNTER- TYP
RE D11/A-2 FOR DETAIL.
HOLD END BRACKETS 2" BACK FROM WALL OR PANEL.
CENTER MIDDLE BRACKETS BETWEEN SINKS

G1 / A-2 INTERIOR ELEVATIONS: SOUTH WALL, WOMENS ROOM
1/4" = 1'-0"

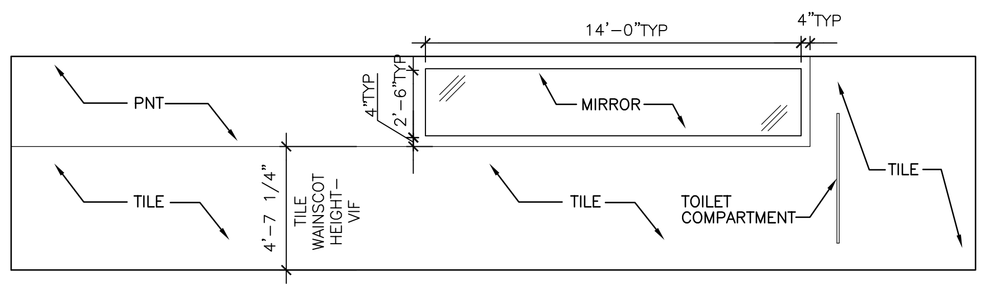

G6 / A-2 INTERIOR ELEVATIONS: NORTH WALLS
1/4" = 1'-0"

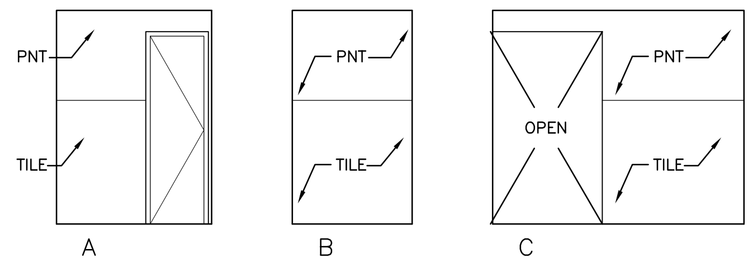

G10 / A-2 INTERIOR ELEVATIONS: SOUTH WALL, WOMENS ROOM
1/4" = 1'-0"

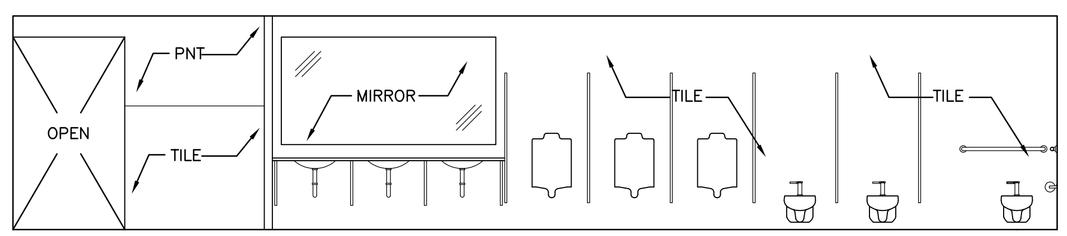

D7 / A-2 INTERIOR ELEVATIONS: SOUTH WALL, MENS ROOM
1/4" = 1'-0"

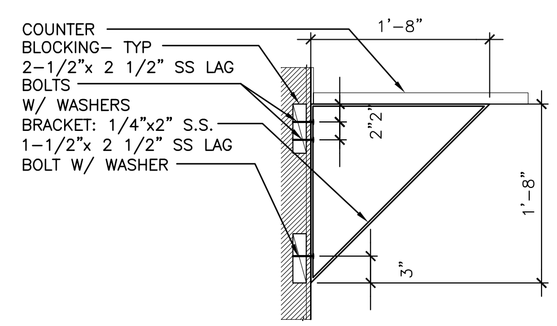

D11 / A-2 COUNTER BRACKET DETAIL
1" = 1'-0"

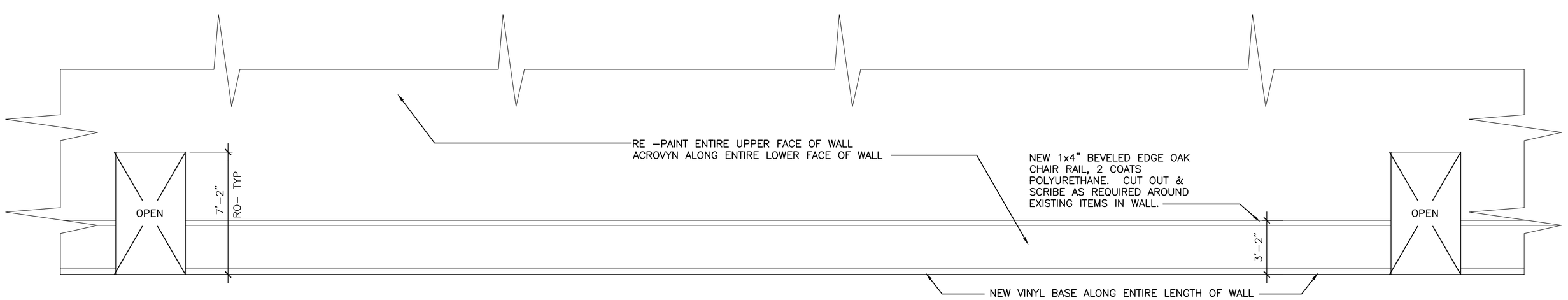

B1 / A-2 INTERIOR ELEVATIONS: NORTH WALL OF MEZZANINE
1/4" = 1'-0"

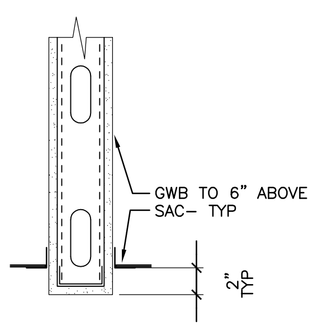

B11 / A-2 COUNTER BRACKET DETAIL
1 1/2" = 1'-0"

General Notes

ISSUED FOR
CONSTRUCTION
2/25/08

No.	Revision/Issue	Date

Facilities & Engineering
1001 Westbrook ST
Portland, ME 04102
207-874-8877

Project Name and Address

UPPER LEVEL
BATHROOM
RENOVATIONS

Sheet Title

REFLECTED CEILING
PLAN,
INTERIOR
ELEVATIONS

Project Number: 08-1001

Date: Issued For Construction 2/25/08

Scale: Reference Individual Drawings

Sheet: A-2