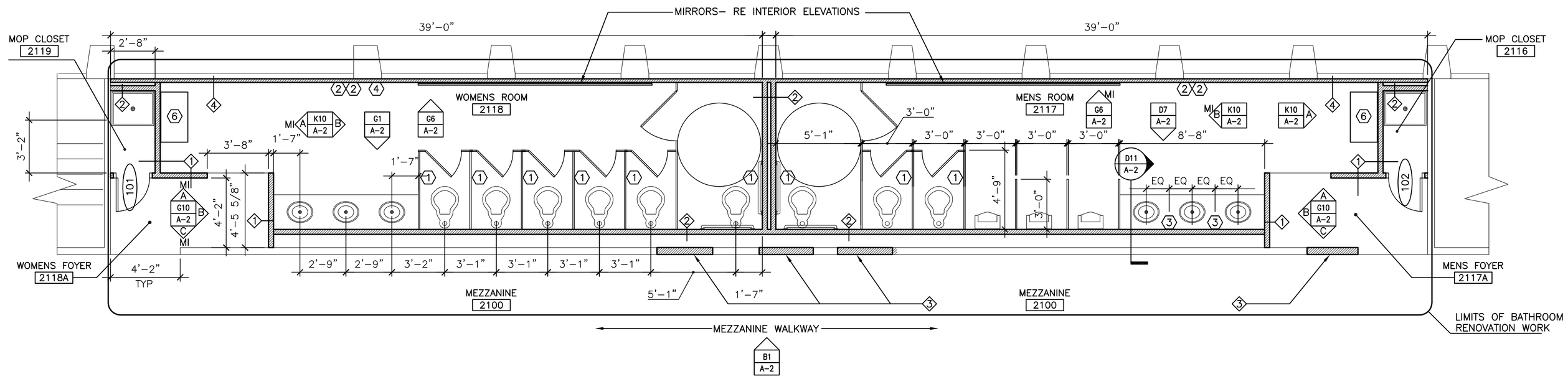

L1 FLOOR PLAN

1/4" = 1'–0"

PARTITION TAG LEGEND

1 3–5/8" METAL STUDS @ 16" O.C. (1) LAYER 5/8" GWB EACH SIDE.	
2 3–5/8" METAL STUDS @ 16" O.C. (1) LAYER 5/8" GWB ONE SIDE.	
3 INFILL WALL OPENINGS AS REQUIRED FOR NEW SURFACES TO ALIGN & MATCH EXISTING SURFACES	
4 1 1/2" HIGH HAT FURRING CHANNEL OVER EXISTING PRECAST PANELS WITH 1 1/2" POLYISOCYANURATE INSULATION INFILL COVERED BY SPECIFIED GWB. EXTEND INSULATION TO UNDERSIDE OF DECK.	

KEYED NOTES:

1. TOILET PAPER DISPENSER
2. PAPER TOWEL DISPENSER
3. SOAP DISPENSER
4. SANITARY NAPKIN MACHINE
5. RESERVED
6. PROVIDE BABY CHANGING STATION
7. RESERVED

SHEET NOTES:

1. SEE SHEET G–1 FOR LEGEND, ABBREVIATIONS & GENERAL NOTES.
2. MENS & WOMENS ROOM LAYOUTS ARE MIRRORED IDENTICALLY, EXCEPT FOR URINALS IN THE MENS ROOM. REFERENCE EACH SIDE FOR LAYOUT & DIMENSIONAL INFORMATION PERTAINING TO BOTH.
3. TOILET PAPER, PAPER TOWEL AND SOAP DISPENSERS, AND SANITARY NAPKIN MACHINES SHALL BE OWNER–SUPPLIED, AND INSTALLED BY CONTRACTOR.
4. PROVIDE COAT HOOKS ON STALL SIDE OF ALL TOILET DOORS.
5. PROVIDE SHELF @ 60" AFF ON NORTH WALLS OF MOP CLOSETS.

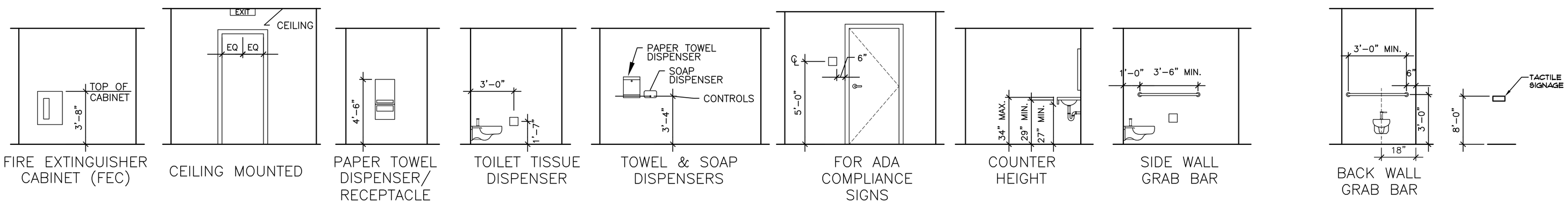

A1 ADA MOUNTING HEIGHTS

1/4" = 1'–0"

General Notes

ISSUED FOR CONSTRUCTION
2/25/08

No.	Revision/Issue	Date

Facilities & Engineering
1001 Westbrook ST
Portland, ME 04102
207–874–8877

Project Name and Address

UPPER LEVEL BATHROOM RENOVATIONS

Sheet Title

FLOOR PLAN, ADA MOUNTING HEIGHTS

Project Number: 08–1001

Date: Issued For Construction 2/25/08

Scale: Reference Individual Drawings

Sheet: A–1