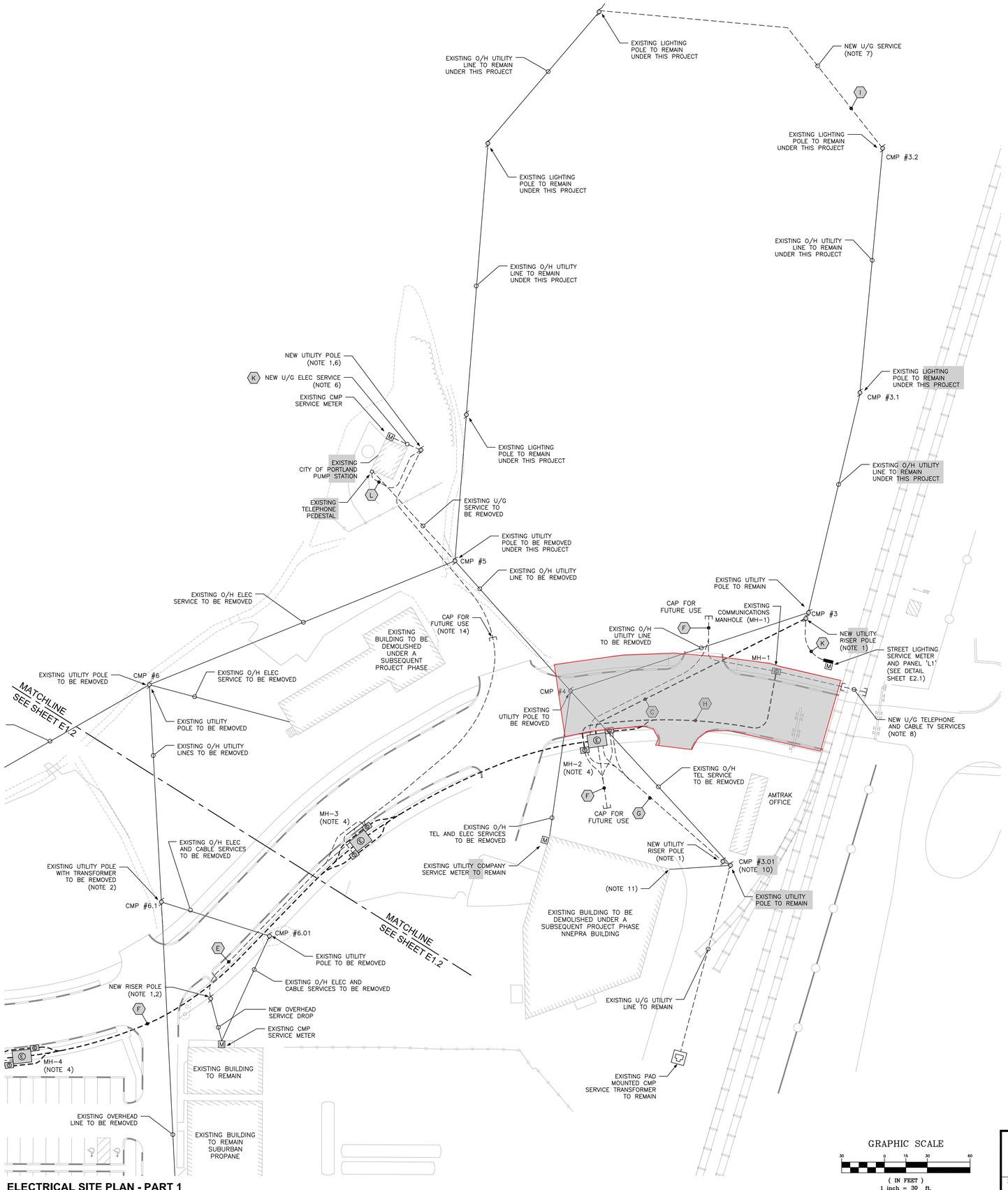

ELECTRICAL SITE PLAN - PART 1

1" = 30'

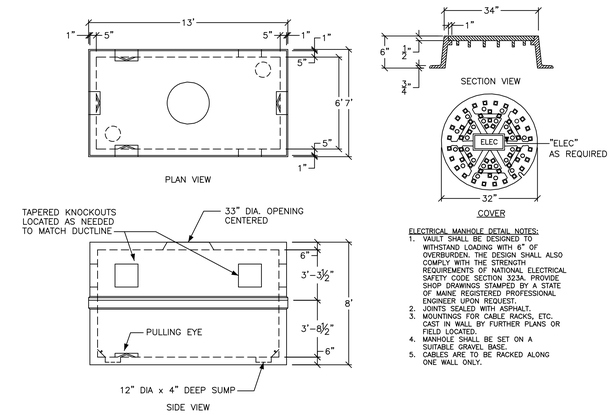

ELECTRICAL MANHOLE DETAIL NOTES:

1. VAULT SHALL BE DESIGNED TO WITHSTAND LOADING WITH 6" OF OVERBURDEN. THE DESIGN SHALL ALSO COMPLY WITH THE STRENGTH REQUIREMENTS OF NATIONAL ELECTRICAL SAFETY CODE SECTION 323A. PROVIDE SHOP DRAWINGS STAMPED BY A STATE OF MAINE REGISTERED PROFESSIONAL ENGINEER UPON REQUEST.
2. JOINTS SEALED WITH ASPHALT.
3. MOUNTINGS FOR CABLE RACKS, ETC. CAST IN WALL BY FURTHER PLANS OR FIELD LOCATED.
4. MANHOLE SHALL BE SET ON A SUITABLE GRAVEL BASE.
5. CABLES ARE TO BE RACKED ALONG ONE WALL ONLY.

ELECTRICAL MANHOLE DETAIL

NOT TO SCALE

CABLE TV/TELEPHONE MANHOLE DETAIL NOTES:

1. CONCRETE: 4,000 PSI @ 28DAYS.
2. USE 32IN COVER AND FRAME MARKED ELEC OR COMM AS REQUIRED. MINIMUM ONE COURSE BRICK TO GRADE.
3. MOUNTINGS FOR CABLE RACKS ECT, CAST IN WALL BY FUTURE PLANS OR FIELD LOCATED.
4. SPLICE BOX SHALL BE SET ON A SUITABLE GRAVEL BASE.
5. REINFORCING: GRADE 60 REBAR:
   - REINFORCING PLACED IN CENTER IF CONCRETE SLAB, WALLS, & ROOF.
   - #4 @ 5IN O.C. VERTICAL IN WALLS, CANTILEVERED OVER TOP OF OPENING
   - #4 @ 8IN O.C. HORIZONTALLY IN WALLS
   - 4 PIECES #4 SURROUNDING OPENING
   - #4 @ 5IN O.C. EACH WAY ON TOP
6. MANHOLE FRAMES AND COVERS ARE TO BE MACHINED TO A SMOOTH FIT AND SHALL BE OF GRAY CAST IRON.
7. COVER SHALL HAVE DIAMOND TOP SURFACE.

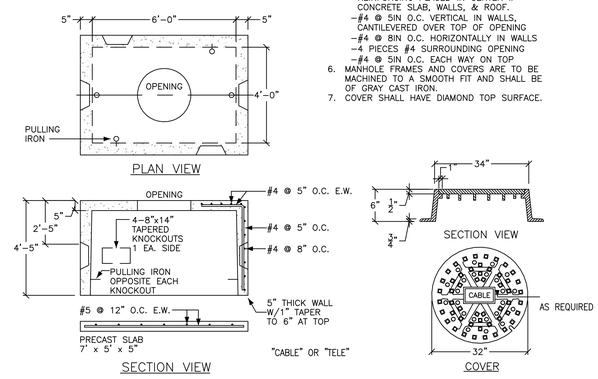

TELEPHONE & CABLE TV MANHOLE DETAIL

NOT TO SCALE

DUCT SECTIONS

A.	– (4) 4" CONDUITS	ELECTRICAL SECONDARY
B.	– (1) 4" CONDUIT	TELEPHONE
	– (1) 4" CONDUIT	CABLE TV
* C.	– (3) 5" CONDUITS	ELECTRICAL PRIMARY
* D.	– (1) 4" CONDUIT	TELEPHONE
	– (1) 4" CONDUIT	CABLE TV
	– (1) 5" CONDUIT	ELECTRICAL PRIMARY
E.	– (1) 4" CONDUIT	CABLE TV
	– (1) 5" CONDUIT	ELECTRICAL PRIMARY
* F.	– (3) 5" CONDUITS	ELECTRICAL PRIMARY
	– (3) 4" CONDUITS	TELEPHONE
	– (1) 4" CONDUIT	CABLE TV
* G.	– (2) 5" CONDUITS	ELECTRICAL PRIMARY
	– (1) 4" CONDUIT	TELEPHONE
	– (1) 4" CONDUIT	CABLE TV
* H.	– (3) 4" CONDUITS	TELEPHONE
	– (1) 4" CONDUITS	CABLE TV
I.	– (1) 1-1/2" CDT	LIGHTING CIRCUIT
J.	– (2) 5" CONDUITS	ELECTRICAL SECONDARY
K.	– (1) 2" CONDUIT	ELECTRICAL SECONDARY
L.	– (1) 2" CONDUIT	TELEPHONE

* ENCASE DUCT BANK IN 3-INCH CONCRETE ENVELOPE WHERE CROSSING BENEATH ROADWAYS.

MAINTAIN 6" BETWEEN ELECTRICAL PRIMARY CONDUITS. MAINTAIN 12" BETWEEN ELECTRICAL CONDUITS AND TELEPHONE OR CABLE TV.

NOTES:

1. WHERE INDICATED, ARRANGE WITH CMP TO PROVIDE A NEW SERVICE RISER POLE.
2. WHERE INDICATED, ARRANGE WITH CMP TO RELOCATE THE EXISTING POLE MOUNTED SERVICE TRANSFORMER FROM POLE #6.1 TO THE NEW RISER POLE.
3. SERVICE EQUIPMENT AND SERVICE METERING SHALL BE AS DESIGNED AND SPECIFIED UNDER THE BRICK NORTH INTERIOR RENOVATION PROJECT. VERIFY THE EXACT LOCATION OF SERVICE ENTRANCE AT BUILDING EXTERIOR.
4. WHERE INDICATED, PROVIDE A NEW MANHOLE STRUCTURE FOR CMP ELECTRICAL PRIMARY, FAIRPOINT SERVICE AND TIME-EARNER SERVICE CABLES. SEE DETAIL THIS SHEET.
5. WHERE INDICATED, ARRANGE WITH CMP TO PROVIDE A NEW PAD MOUNT SERVICE TRANSFORMER.
6. ARRANGE WITH CMP TO RELOCATE THE EXISTING SERVICE TRANSFORMER THAT SERVES THE CITY PUMP STATION FROM POLE #4 TO THE NEW UTILITY POLE TO BE LOCATED ADJACENT TO THE PUMPS STATION. EXTEND A NEW SECONDARY UNDERGROUND SERVICE FROM THE RELOCATED TRANSFORMER TO THE EXISTING SERVICE METER ON THE OUTSIDE OF THE PUMP STATION. MATCH EXISTING SERVICE CONDUCTOR SIZE AND QUANTITY.
7. WHERE INDICATED, PROVIDE AN EXTENSION OF THE EXISTING FLOODLIGHT CIRCUIT BETWEEN EXISTING POLE #3.2 AND THE EXISTING FLOODLIGHT POLE TO THE SOUTH. PROVIDE 2 #6 CONDUCTOR IN A 1-1/2" CONDUIT. CONNECT THE CIRCUIT TO THE EXISTING CMP LIGHTING CIRCUIT AT POLE #3.2.
8. TELEPHONE AND CABLE TV SERVICE CONDUITS EXTEND UNDER THE RAILROAD TRACKS AND RUN TO AN EXISTING TELECOMMUNICATIONS MANHOLE (MH-1).
9. CIRCUIT PARKING LOT LIGHTING POLES AT BRICK NORTH WITH 2 #6, 1 #8 GND, IN A 1-1/2" CDT. CIRCUIT BRICK NORTH BUILDING MOUNTED LIGHTING WITH 2 #10, 1 #12GND, IN ¾" CDT.
10. WHERE INDICATED, ARRANGE WITH CMP TO PROVIDE A NEW 120/240V, 1PH SERVICE TRANSFORMER TO BE INSTALLED ON CMP POLE #3.01 TO SERVICE THE EXISTING NNEPRA BUILDING.
11. WHERE INDICATED, PROVIDE A NEW OVERHEAD 120/240V ELECTRICAL SERVICE DROP FROM POLE CMP #3.01 TO THE EXISTING NNEPRA BUILDING. ROUTE THE SERVICE CONDUCTORS ALONG THE FACE OF THE BUILDING AND CONNECT TO THE EXISTING SERVICE METER. ALSO ARRANGE WITH FAIRPOINT TO PROVIDE AN OVERHEAD TELEPHONE SERVICE DROP.
12. EXTEND (3) 5" CONDUITS FOR ELECTRICAL PRIMARY, (3) 4" CONDUITS FOR TELEPHONE, AND (1) 4" CONDUIT FOR CABLE TV FROM MANHOLE MH-9. CAP (2) OF THE 5" CONDUITS BELOW GRADE FOR FUTURE USE. EXTEND THE REMAINING 5" CONDUIT, AS WELL AS THE 4" CONDUITS FOR TELEPHONE AND CABLE TV SERVICES TO CMP POLE #6.5.
13. PROVIDE RISER CONDUITS FOR ELECTRICAL PRIMARY, TELEPHONE, AND CABLE TV SERVICES AT EXISTING CMP POLE #6.5. ARRANGE WITH UTILITY SERVICE COMPANIES TO BACKFEED THE EXISTING OVERHEAD UTILITY LINES EXTENDING TO EXISTING CMP POLE #6.4.
14. EXTEND (3) 5" CONDUITS FOR ELECTRICAL PRIMARY, (3) 4" CONDUITS FOR TELEPHONE, AND (1) 4" CONDUIT FOR CABLE TV FROM MANHOLE MH-3. CAP (2) OF THE 5" CONDUITS BELOW GRADE FOR FUTURE USE. EXTEND THE REMAINING 5" CONDUIT, AS WELL AS THE 4" CONDUIT FOR TELEPHONE SERVICE TO THE NEW UTILITY POLE TO BE LOCATED ADJACENT TO THE PUMP STATION.

PRELIMINARY

Bartlett Design
LIGHTING & ELECTRICAL ENGINEERING
942 WASHINGTON STREET, BATH, ME 04530
TEL (207) 443-5447 FAX (207) 443-5560

REV	DATE	DESCRIPTION
2	07.24.14	SUBMITTED FOR UTILITY COMPANY REVIEW
1	07.01.14	SUBMITTED FOR CLIENT REVIEW

REVISIONS

STATE OF MAINE LAWRENCE E. BARTLETT No. 7928 LICENSED PROFESSIONAL ENGINEER
7/24/14
L. BARTLETT
LIC. #7928

PROJECT: BRICK NORTH BUILDING AT THE FOREFRONT AT THOMPSON'S POINT

SHEET TITLE: ELECTRICAL SITE PLAN PART 1

CLIENT: FOREFRONT PARTNERS I, LP

FST PORTLAND
FAY, SPOFFORD & THORNDIKE
ENGINEERS · PLANNERS · SCIENTISTS
778 MAIN ST, SUITE 8, SOUTH PORTLAND, ME 04106

DRAWN:	JLC
DESIGNED:	LEB
CHECKED:	LEB
FILE NAME:	
SHEET	E1.1
E:	07/01/2014
LE:	1" = 30'-0"
NO.	2982.05

CITY OF PORTLAND
APPROVED SITE PLAN
Subject to Conditions of Approval
See Standard Conditions
DATE of APPROVAL Dec. 4, 2014
BY ISSUED Christine Grimando
PROJECT NO. 2014-120

C:\2013 Projects\13-0050\Working Drawings\07-24-14\1350 E1.1 & E1.2.dwg jessica 7/24/2014 3:32 PM