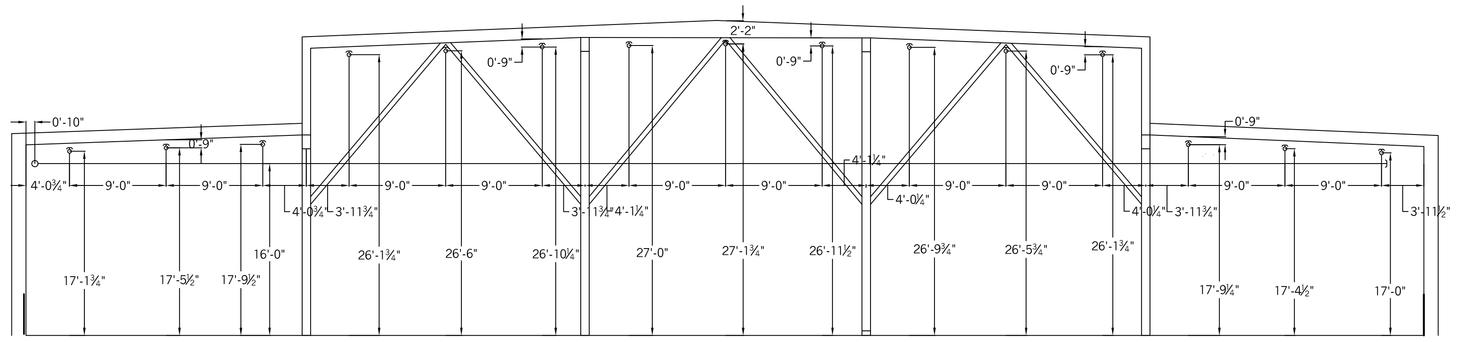

CROSS SECTION

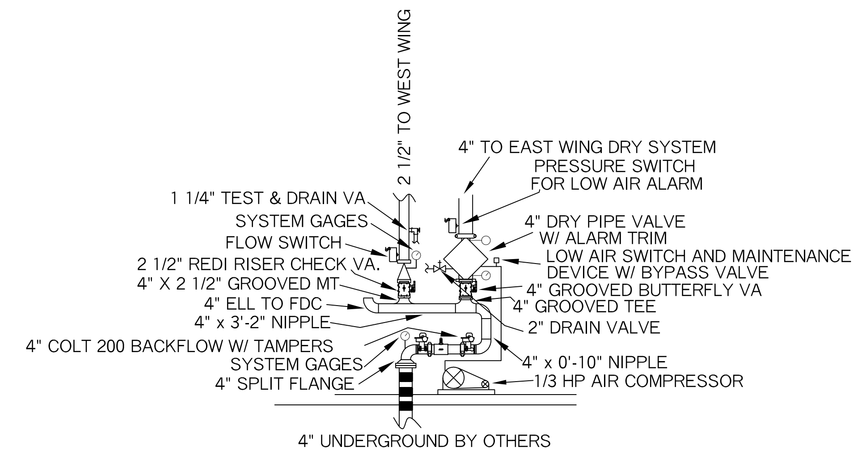


MAIN RISER DETAIL
NOT TO SCALE

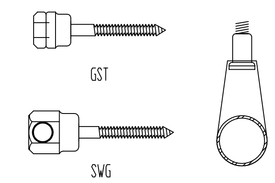


*SAMMY SUPER SCREWS WITH METAL BAND HANGERS TO HANG STEEL PIPING*

N
PLAN NORTH

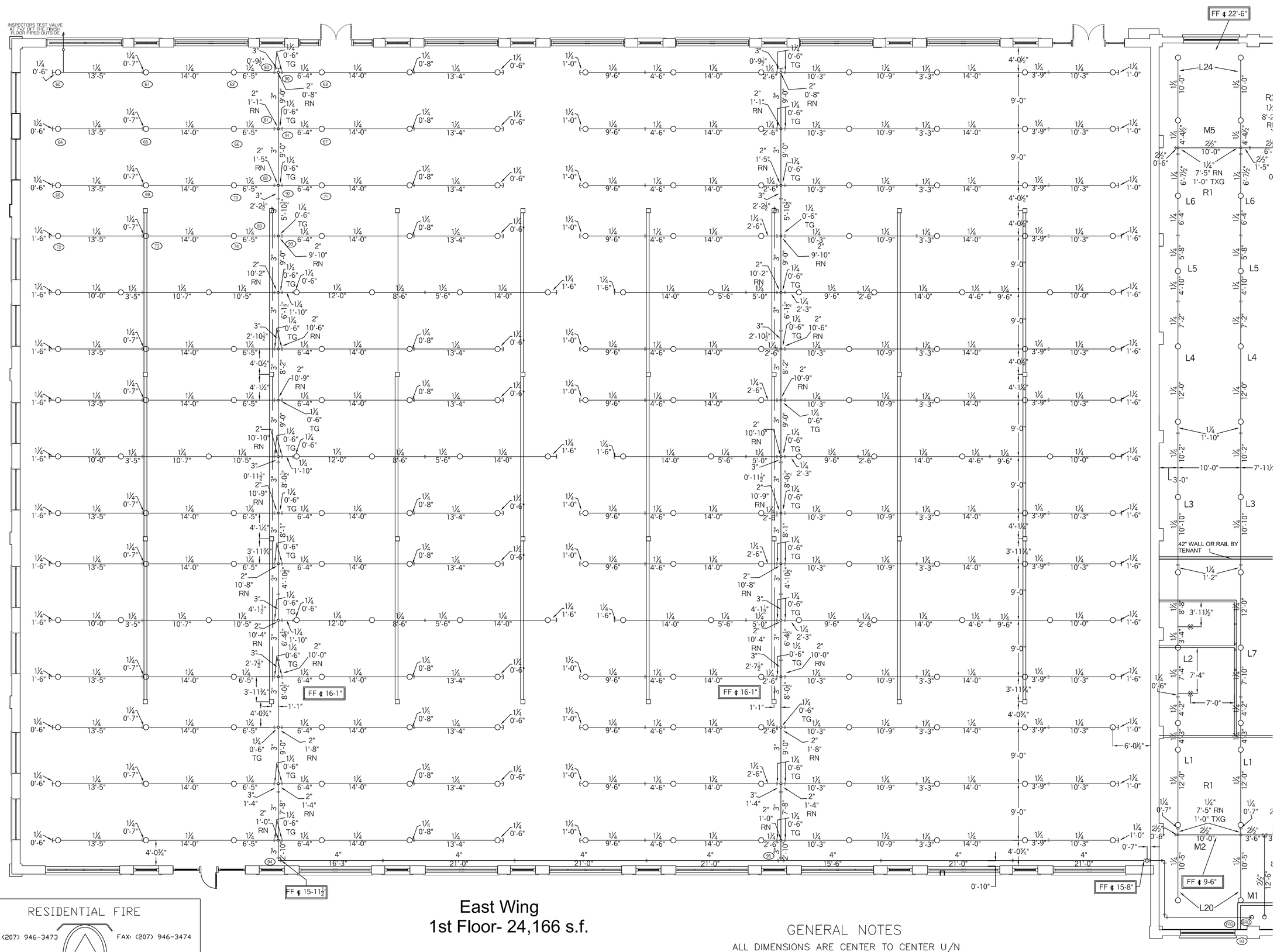


HYDRAULIC DATA:
EAST WING
BASIS OF DESIGN NFPA 13

| DENSITY | AREA OF COVERAGE |
|---|---|
| .2 | 1950 SQFT |

TOTAL THREAD TEMP

| SPRINKLERS | 16 | 1/2" | 155 |
|---|---|---|---|

SYSTEM DEMAND AT PUMP OUTLET:

| PRESSURE | FLOW | HOSE |
|---|---|---|
| 88.135 | 688.781 | 250 |

SAFETY MARGIN: 8.48
OCCUPANCY: UNOCCUPIED

LEGEND

- ▷ 155°F QR 1/2" WHITE SIDEWALL
- ◑ 155°F QR 1/2 BRASS PENDENT
- ○ 155°F QR 1/2 BRASS UPRIGHT
- 155°F QR 1/2" WHITE RECESSED PENDENT
- 200°F QR 1/2" BRASS UPRIGHT
- HANGER
- RISE OR DROP NIPPLE
- VICTAULIC COUPLING

FF k=XX FIN FLR TO CENTERLINE OF PIPE
C k=XX CEILING TO CENTERLINE OF PIPE
TJ k=TOP OF JOIST TO CENTERLINE OF PIPE
BJ k=BOTTOM OF JOIST TO CENTERLINE OF PIPE
BB k=BOTTOM OF BEAM TO CENTERLINE OF PIPE
ELEV k=CIVIL ELEVATION OF CENTERLINE OF PIPE

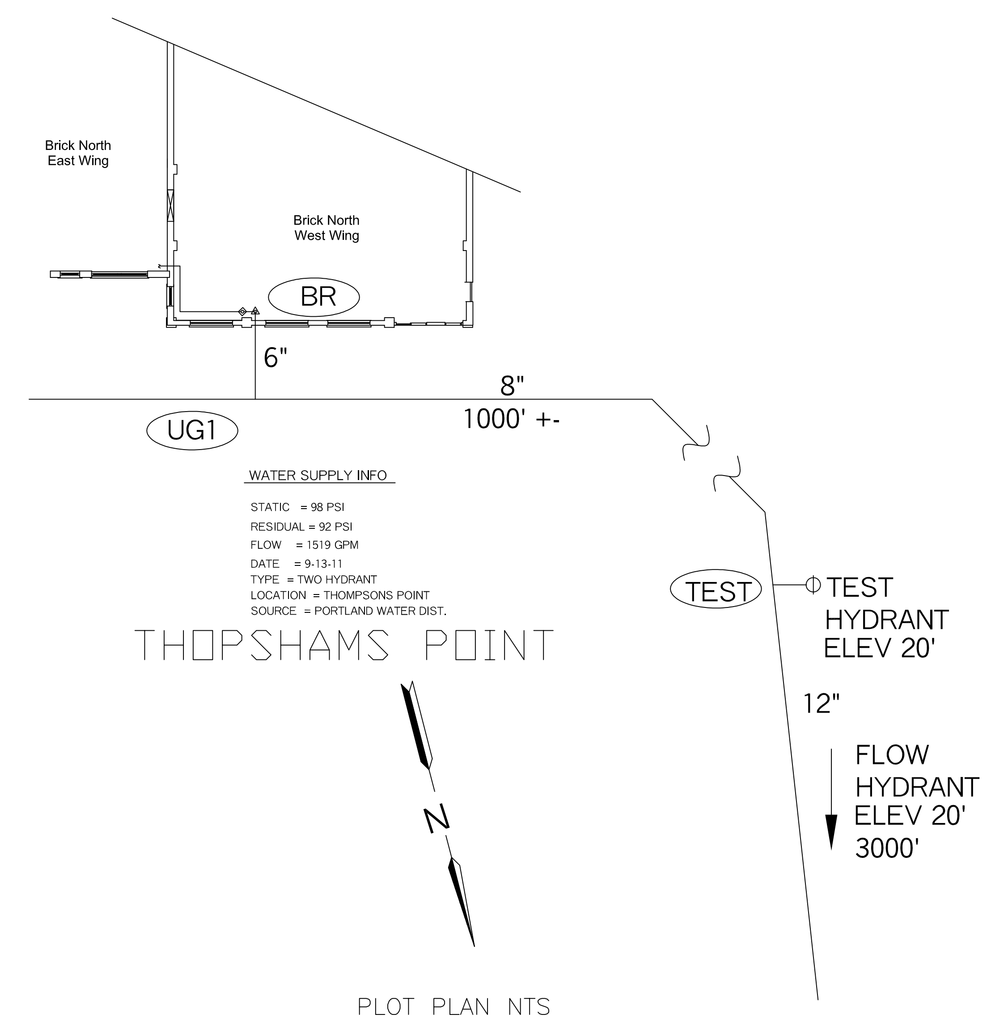


WATER SUPPLY INFO

STATIC = 98 PSI
RESIDUAL = 92 PSI
FLOW = 1519 GPM
DATE = 9-13-11
TYPE = TWO HYDRANT
LOCATION = THOMPSONS POINT
SOURCE = PORTLAND WATER DIST.

THOPSHAMS POINT

PLOT PLAN NTS

SYSTEM DESIGN

A DRY PIPE SYSTEM OF AUTOMATIC SPRINKLERS TO BE DESIGNED AND INSTALLED PER NFPA 13
ALL SPRINKLERS TO BE BASED ON ORDINARY HAZARD GROUP II

East Wing
1st Floor- 24,166 s.f.

198 / 155°F — VIKING VK300 QR BRASS UPRIGHTS (SPRIG) 1/2"X1/2" K=5.6

GENERAL NOTES

ALL DIMENSIONS ARE CENTER TO CENTER U/N
ALL THREADED PIPE TO BE SCH. 40 BLACK STEEL
ALL SCREWED FITTINGS TO BE STD. WT. C.I. BLACK U/N
ALL GROOVED PIPE TO BE SCH 10 BLACK STEEL
DRY PIPE SYSTEM CAPACITY: 458 GALLONS


RESIDENTIAL FIRE
PHONE: (207) 946-3473 FAX: (207) 946-3474
64 DAGGETT HILL ROAD GREENE, MAINE 04236
PROTECTION, LLC

STANLEY J. CAMIC
NICET III -#78065


| REVISION NUMBER | DATE | | | | |
|---|---|---|---|---|---|
| | | SURVEYED BY | SJC | 09-8-14 | TITLE |
| | | DRAWN BY | SJC | 09-10-14 | |
| | | APPROVED BY | SJC | 09-11-14 | |
| | | SCALE 1/8"= 1'-0" U/N | | | |
| | | SHEET NO. 1 OF 1 | | | |

BRICK NORTH EAST WING
THOMPSOMS POINT
PORTLAND, MAINE

NO. OF SPRINKLERS SHOWN ON THIS SHEET: 198
NO. OF SPRINKLERS ON JOB: 198
CONTRACT NO. C14022