Reviewed for Code Compliance
Inspections Division
Approved with Conditions
Date: 04/19/17

FAR & ABOVE THE BEST
C·CAPRARA
FOOD SERVICE EQUIPMENT

Submittal Sheet

01/17/2017

ITEM# 20 - EXHAUST HOOD (1 EA REQ'D)

Captive-Aire 6030-ND-2-PSP-F

15ft 0" Long Exhaust-Only Wall Canopy Hood with Front Perforated Supply Plenum with Built-in 3" Back Standoff

ACCESSORIES

Mfr	Qty	Model	Spec
Captive-Aire	1		ANSUL-3.0 Ansul 3 gallon Fire System in Utility Cabinet (includes pre-piped hood(s) with detection, tank(s), release mechanism, microswitches and pull station)
Captive-Aire	1		DU200HFA High Speed Direct Drive Centrifugal Upblast Exhaust Fan with disconnect switch and 20-3/4" wheel. Exhaust Fan handles 3000 CFM @ -1.500" wc ESP, Fan runs at 1142 RPM. Exhaust Motor: 5.000 HP, 3 Phs, 208 V, 60Hz, 15.0 FLA, ODP, Premium (EPlus3) Eff
Captive-Aire	1		A2-D.250-G15 Direct Gas Fired Heated Make Up Air Unit with 15" Blower Supply Fan handles 2700 CFM @ 0.500" wc ESP, Fan runs at 747 RPM. Heater supplies 207036 BTUs. 71°F Temperature Rise. [Fuel: Natural Gas] Supply Motor: 2.000 HP, 3 Phase, 208 V, 60Hz, 6.1 FLA, ODP, Premium (EPlus3) Eff. Down Discharge - Air Flow Right -> Left
Captive-Aire	1		DCV-1111 Demand Control Ventilation, w/ control for 1 Exhaust Fan, 1 Supply Fan, Exhaust on in Fire, Lights out in Fire, Fans modulate based on duct temperature. INVERTER DUTY THREE PHASE MOTOR REQUIRED! Room temperature sensor shipped loose for field installation.Verify distance between VFD and Motor; additional cost could apply if distance exceeds 50 feet. Includes 2 Duct Thermostat kits
Captive-Aire	1		Factory Services

ELECTRICAL

	VOLTS	CYCLE	PHASE	CONN	AFF	NEMA	AMPS	KW	HP	MCA	MOCP
1											

Reviewed for Code Compliance
Inspections Division
Approved with Conditions
Date: 04/19/17

GAS

	SIZE	MBTU	KW
1			

STEAM

	INLET SIZE	RETURN SIZE	LB/HR	PSIG (min)	PSIG (max)
1					

WATER

	HOT SIZE	HOT AFF	HOT GPH	COLD SIZE	COLD AFF	FILTERED SIZE	FILTERED AFF	CONDENSER INLET SIZE	CONDENSER OUTLET SIZE
1									

WASTE

	INDIRECT SIZE	DIRECT SIZE
1		

VENTILATION

	EXHAUST					MAKE UP				
	WIDTH	DEPTH	DIAM	CFM	SPWG	WIDTH	DEPTH	DIAM	CFM	SPWG
1										

Reviewed for Code Compliance
Inspections Division
Approved with Conditions
04/19/17
Date:

ORMATION – Job#2802149

HOOD NO.	TAG	MODEL	LENGTH	MAX. COOKING TEMP.	EXHAUST PLENUM TOTAL EXH. CFM	RISER(S) WIDTH	LENG.	HEIGHT	DIA.	CFM	S.P.	TOTAL SUPPLY CFM	HOOD CONSTRUCTION	HOOD CONFIG END TO END	ROW
1		6030 ND-2-PSP-F	15' 0.00"	600 Deg.	3000			4"	12"	1500	-0.711"	2700	430 SS Where Exposed	ALONE	ALONE
								4"	12"	1500	-0.711"				

PATENT NUMBERS

AC-PSP (United States) – US Patent 7963830 B2
AC-PSP Wall (Canada) – CA Patent 2820509
AC-PSP Island (Canada) – CA Patent 2520330

HOOD INFORMATION

HOOD NO.	TAG	FILTER(S) TYPE	QTY.	HEIGHT	LENGTH	EFFICIENCY @ 9 MICRONS	LIGHT(S) QTY.	TYPE	WIRE GUARD	UTILITY CABINET(S) LOCATION	SIZE	FIRE SYSTEM TYPE	SIZE	ELECTRICAL MODEL #	SWITCHES QUANTITY	FIRE SYSTEM PIPING	HOOD HANGING WGHT
1		Captrate Solo Filter	11	20"	16"	93% See Filter Spec.	5	Screw In 12W LED	NO	Right	12"x60"x30"	Ansul R102	3.0	DCV-1111	1 Light 1 Fan	YES	1178 LBS

HOOD OPTIONS

HOOD NO.	TAG	OPTION
1		FIELD WRAPPER 12.00" High Front, Left, Right
		BACKSPLASH 80.00" High X 192.00" Long 430 SS Vertical
		STRUCTURAL FRONT PANEL
		LEFT VERTICAL END PANEL 27" Top Width, 21" Bottom Width, 80" High Insulated 430 SS
		RIGHT VERTICAL END PANEL 27" Top Width, 21" Bottom Width, 80" High Insulated 430 SS

PERFORATED SUPPLY PLENUM(S)

HOOD NO.	TAG	POS.	LENGTH	WIDTH	HEIGHT	TYPE	RISER(S) WIDTH	LENG.	DIA.	CFM	S.P.
1		Front	192"	18"	6"	MUA	12"	28"		675	0.173"
						MUA	12"	28"		675	0.173"
						MUA	12"	28"		675	0.173"
						MUA	12"	28"		675	0.173"

SPECIFICATION: CAPTRATE® GREASE-STOP® SOLO FILTER

THE CAPTRATE GREASE-STOP SOLO FILTER IS A SINGLE-STAGE FILTER FEATURING A UNIQUE S-BAFFLE DESIGN IN CONJUNCTION WITH A SLOTTED REAR BAFFLE DESIGN, TO DELIVER EXCEPTIONAL FILTRATION EFFICIENCY.

FILTER IS STAINLESS STEEL CONSTRUCTION, AND SIZED TO FIT INTO STANDARD 2-INCH DEEP HOOD CHANNELS.

UNITS SHALL INCLUDE STAINLESS STEEL HANDLES AND A FASTENING DEVICE TO SECURE THE TWO COMPONENTS WHEN ASSEMBLED.

GREASE EXTRACTION EFFICIENCY PERFORMANCE SHALL REMOVE AT LEAST 75% OF GREASE PARTICLES FIVE MICRONS IN SIZE, AND 90% GREASE PARTICLES SEVEN MICRONS IN SIZE AND LARGER, WITH A CORRESPONDING PRESSURE DROP NOT TO EXCEED 1.0 INCHES OF WATER GAUGE.

THE CAPTRATE GREASE-STOP SOLO WAS TESTED TO ASTM STANDARD ASTM F2519-05.

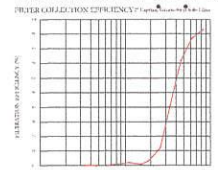

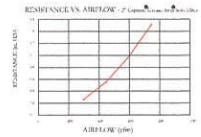

CAPTRATE FILTERS ARE BUILT IN COMPLIANCE WITH:
NFPA #96
NSF STANDARD #2
UL STANDARD #1046
INT. MECH. CODE (IMC)
ULC-S649

GREASE DUCT SPECIFICATIONS:
PROVIDE GREASE DUCT EQUAL TO CAPTIVEAIRE SYSTEMS MODEL "DW" ROUND 20 GAUGE 430 STAINLESS STEEL DUCTWORK. MODEL "DW" IS LISTED TO UL-1978 AND IS INSTALLED USING "V" CLAMP LOCKING CONNECTIONS SEALED WITH 3M FIRE BARRIER 2000 PLUS. MODEL "DW" DOES NOT REQUIRE WELDING PROVIDING IT HAS BEEN INSTALLED PER THE MANUFACTURES INSTALLATION GUIDE.
PROVIDE RATED ACCESS DOORS AT EVERY CHANGE IN DIRECTION AND EVERY 12' ON CENTER. PER MANUFACTURES LISTING MODEL "DW" HORIZONTAL RUNS LESS THAN 75 FT. CAN BE SLOPED 1/16" PER 12", HORIZONTAL RUNS MORE THAN 75 FT. CAN BE SLOPED 3/16" PER 12". DUCT SHOULD BE SLOPED AS MUCH AS POSSIBLE TO REDUCE THE CHANCE OF GREASE ACCUMULATION IN HORIZONTAL RUNS.

IF THE DUCT IS WITHIN 18 INCHES OF COMBUSTIBLE MATERIAL, PROVIDE UL-2221 LISTED DOUBLE WALL GREASE DUCT EQUAL TO CAPTIVEAIRE SYSTEMS MODEL "DW- 2R, 3R, OR 3Z" ROUND 20 GAUGE 430 STAINLESS INNER DUCT INSULATED WITH A 24 GAUGE 430 STAINLESS OUTER SHELL.

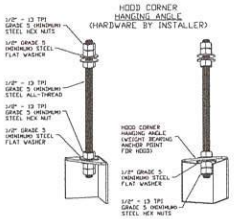

ASSEMBLY INSTRUCTIONS

HANGING ANGLE MUST BE SUPPORTED WITH 1/2" - 13 TPI GRADE 5 (MINIMUM) ALL-THREAD. SANDWICH HANGING ANGLES AND CEILING ANCHOR POINTS WITH 1/2" GRADE 5 (MINIMUM) STEEL FLAT WASHERS AND 1/2" - 13 TPI GRADE 5 (MINIMUM) HEX NUTS AS SHOWN. MUST USE DOUBLED HEX NUT CONFIGURATION BENEATH HOOD HANGING ANGLES AND ABOVE CEILING ANCHORS. MAINTAIN 1/4" OF EXPOSED THREADS BENEATH BOTTOM HEX NUT. TORQUE ALL HEX NUTS TO 57 FT-LBS.

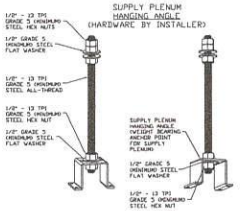

ASSEMBLY INSTRUCTIONS

HANGING ANGLE MUST BE SUPPORTED WITH 1/2" - 13 TPI GRADE 5 (MINIMUM) ALL-THREAD. SANDWICH HANGING ANGLES AND CEILING ANCHOR POINTS WITH 1/2" GRADE 5 (MINIMUM) STEEL FLAT WASHERS AND 1/2" - 13 TPI GRADE 5 (MINIMUM) HEX NUTS AS SHOWN. MUST USE DOUBLED HEX NUT CONFIGURATION ABOVE CEILING ANCHORS. SINGLE HEX NUT BENEATH HANGING ANGLE IS ACCEPTABLE FOR PSP HANGING ANGLES. MAINTAIN 1/4" OF EXPOSED THREADS BENEATH BOTTOM HEX NUT. TORQUE ALL HEX NUTS TO 57 FT-LBS.

CAPTIVEAIRE SYSTEMS RECOMMENDS THE USE OF LISTED, PRE-FABRICATED ROUND GREASE EXHAUST DUCT TO REDUCE STATIC PRESSURE IN THE SYSTEM, MINIMIZE INSTALLATION AND INSPECTION TIMES, AND ENSURE DUCT IS LIQUID TIGHT

HVAC DISTRIBUTION NOTE

IT IS RECOMMENDED NOT TO INSTALL HIGH VELOCITY DIFFUSERS OR HVAC RETURNS WITHIN TEN (10) FEET OF THE EXHAUST HOOD. PERFORATED DIFFUSERS ARE RECOMMENDED.

VERIFY CEILING HEIGHT

___' - ___"

HEIGHT REQUIRED TO VERIFY THAT HOOD FITS SPACE AND TO SIZE THE ENCLOSURE PANELS

CUSTOMER APPROVAL TO MANUFACTURE:

Approved as Noted ☐
Approved with NO Exception Taken ☐
Revise and Resubmit ☐
SIGNATURE _____
Your Title _____ Date _____

REVISIONS

DESCRIPTION	DATE
△	
△	
△	
△	

CAPTIVEAIRE
MAINE OFFICE
PO Box 86, 179 South Rd., Topsfield, ME. 04490 PHONE: (207) 796-2590 FAX: (919) 227-5946 EMAIL: reg24@captiveaire.com
www.captiveaire.com

Thompson Point r3
PORTLAND, ME, 04101

DATE: 1/3/2017
DWG.#: 2802149
DRAWN BY: BFC-21
SCALE: 3/4" = 1'-0"
MASTER DRAWING
SHEET NO. 1

Captive-Aire
6030-ND-2-PSP-F
Item #20

Reviewed for Code Compliance
Inspections Division
Approved with Conditions
Date: 04/19/17

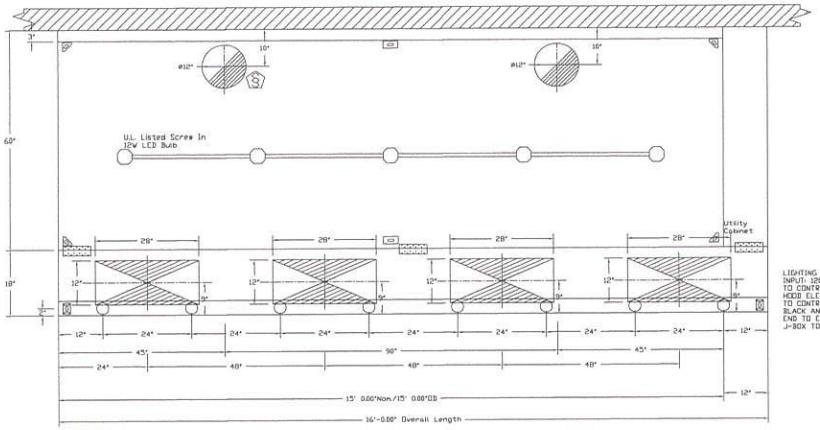

PLAN VIEW – Hood #1
15' 0.00" LONG 6030ND-2-PSP-F
NOTE: Additional hanging angles provided for hoods 12' and longer.

LIGHTING FOR ACPSP Job # 2802149 - Hood #1
INPUT: 120V AC, 1 Phase, 50/60Hz, 3.5 Watts per light.
TO CONTROL LIGHTS WITH HOOD LIGHT SWITCH, WIRE PER HOOD ELECTRICAL CONTROL PANEL SCHEMATIC.
TO CONTROL LIGHTS WITH BUILDING LIGHT SWITCH, WIRE BLACK AND WHITE WIRE TO A 120VAC SERVICE.
END TO END ACPSPS REQUIRE 120VAC FIELD WIRING FROM J-BOX TO J-BOX. REPLACE LIGHTS WITH LED LIGHTS ONLY.

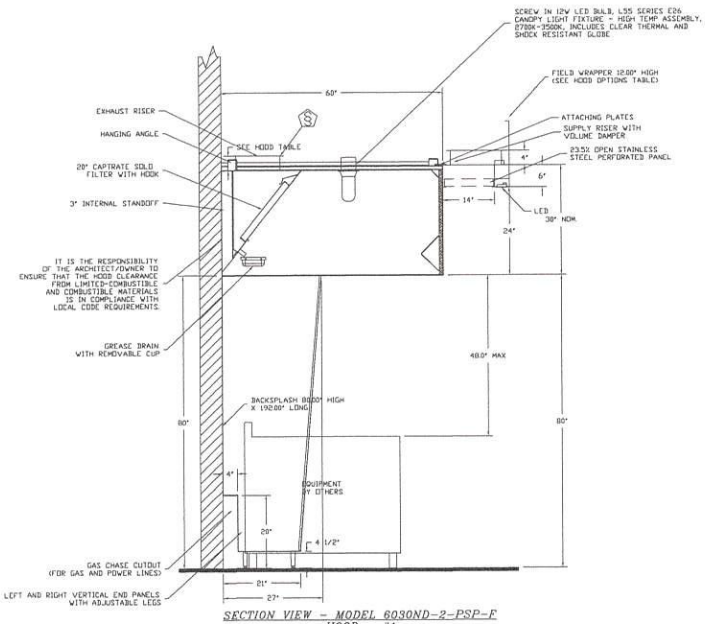

SECTION VIEW – MODEL 6030ND-2-PSP-F
HOOD – #1

Captive-Aire

6030-ND-2-PSP-F

Item #20

REVISIONS

DESCRIPTION	DATE

CAPTIVE-AIRE
MAINE OFFICE
PO Box 86, 179 South Rd., Topsfield, ME 04490 PHONE: (207) 796-2590 FAX: (919) 227-5345 EMAIL: ngc21@captiveaire.com
www.captiveaire.com

Thompson Point r3
PORTLAND, ME, 04101

DATE: 1/3/2017
DWG.#: 2802149
DRAWN BY: BFC-21
SCALE: 3/4" = 1'-0"
MASTER DRAWING
SHEET NO. 2

Reviewed for Code Compliance
Inspections Division
Approved with Conditions
04/19/17
Date:

m Information – Job#2802149

SYSTEM NO.	Tag	TYPE	SIZE	FLOW POINTS	INSTALLATION	
					SYSTEM	LOCATION ON HOOD
1		Ansul R102	3.0	10	Fire Cabinet Right	Right

GAS VALVE(S)

FIRE SYSTEM NO.	TAG	TYPE	SIZE	SUPPLIED BY
1		Mechanical	1.000	CaptiveAire Systems

Fire System Parts List Key

FIRE SYSTEM NO.	TAG	KEY NUMBER - PART DESCRIPTION	QTY. BY FACTORY	QTY. BY DIST.
1		0 - 0 - 43-15733 AIR CYLINDER ASSEMBLY - Air Cylinder and Tubing for Mechanical Gas Valves (Ansul Part #15733)	1	0
		0 - 0 - METALCAP-CB BLOWOFF CAP - Metal	7	0
		1 - 1 - AT - 3.0 TANK(#1B) - 3.0 Gallon SS Tank (for use with Automan Release, Actuator, or SS Enclosure (UL/ULC)) Macola # 01-429862	1	0
		3 - 3 - ANS-OEM REGULATED RELEASE - Ansul Regulated Mechanical Release/Bracket Assembly, OEM, R-102, Cartridge Detection Included, Ansul Part # 79493	1	0
		5 - 5 - LIQ-30 AGENT - Ansulex Low PH Wet Chemical Agent, 3 Gallon (UL) 79372	0	1
		7 - 7 - 101-20 CARTRIDGE - Carbon Dioxide 101-20, 3 Gallon Cartridge (R-102)	0	1
		10 - 10 - TLINK LINK - Test Link (1 test link) Ansul Part # 24916, Macola # 20-24916	0	1
		11 - 11 - MICRO-SDA MICROSWITCH KIT- Includes 2 switches and Mounting Hardware Single Dual Electric Switch, One Standard Switch, One Alarm Duty Switch Ansul Part # 437155, Macola # 08-437155	1	0
		14 - 14 - 419336 NOZZLE - 1W Nozzle, Duct/Appliance (Replaces ANSUL Part# 419347, CAS Part# 419336) A0001266	2	0
		16 - 16 - 419335 NOZZLE - 1N Nozzle, Plenum/Appliance (Replaces ANSUL Part# 419346, CAS Part# 419335) A0001265	2	0
		24 - 24 - 419341 NOZZLE - 2S0 Nozzle, Appliance (Replaces ANSUL Part# 419352, CAS Part# 419341) A0001271	3	0
		25 - 25 - 418569 NOZZLE ADAPTOR - Swivel Nozzle Adaptor (Replaces CAS Part # 418569) A0001274	3	0
		26 - 26 - QSA-3/8 QUIK SEAL - 3/8" (UL)	7	0
		27 - 27 - QPSA-1/2 PULLEY SEAL - 1/2" Hood Seal (UL) Ansul Part # 423253, Macola # 32-79768	1	0
		28 - 28 - S-DET DETECTOR - Series (Scissor Linkage) Ansul Part # 435547/435548 (Old # 417369/434480); Macola # 05-417369	2	0
		29 - 29 - ANS-360FL FUSIBLE LINK - 360deg F, R-102 and PIRANHA, Ansul Part # 439088	1	0
		30 - 30 - ANS-500FL FUSIBLE LINK - 500deg F, R-102 and PIRANHA, Ansul Part # 439232	1	0
		34 - 34 - RPS-A REMOTE PULL STATION - Red composite (without wire rope) 434618 (Old Macola #06-4835)	1	0
		35 - 35 - PE-LT PULLEY ELBOW - Low Temp. Pulley Elbow, Set Screw Type Ansul Part # 415670, Macola # 11-415671	2	0
		36 - 36 - PE-HT PULLEY ELBOW - High Temp Pulley Elbow, Compression Type, Ansul Part # 423251, Macola # 18-4577)	1	0

GASVALVES AND STRAINERS

	GAS VALVE SIZING						GAS VALVE DIMENSIONS						INSTALLATION	PART NUMBERS		
	TYPE	SIZE	VOLTAGE	MIN. INLET PRESSURE	MAX. INLET PRESSURE	FLOW AT 1 IN.W.C. DROP NATURAL GAS	FLOW AT 1 IN.W.C. DROP PROPANE	DIM "A"	DIM "B"	DIM "C"	DIM "D"	DIM "F"	DIM "G"	MOUNTING ORIENTATION	GAS VALVE PART NUMBER	STRAINER PART NUMBER	GAS VALVE/STRAINER KIT
GAS VALVE FOR FS#1 →	MECHANICAL	1"	N/A	0 PSI (0 IN.W.C.)	10 PSI (277 IN.W.C.)	1,200,000 BTU/HR	835,764 BTU/HR	5-1/2"	3-3/4"	4-7/8"	5-3/16"	10-5/8"	9-5/8"	HORIZONTAL	25-55601	4417x65	MGVA1

ELECTRIC GAS VALVES ONLY

3/4" THROUGH 2" VALVES CAN BE MOUNTED WITH THE SOLENOID IN ANY POSITION ABOVE HORIZONTAL.
2-1/2" THROUGH 3" VALVES MUST BE MOUNTED WITH THE SOLENOID VERTICAL AND UPRIGHT

ALL GAS VALVES/STRAINERS

PROPER CLEARANCE MUST BE PROVIDED IN ORDER TO SERVICE THE STRAINERS. A MINIMUM OF 4" CLEARANCE DISTANCE MUST BE PROVIDED AT THE BASE OF THE STRAINER. CUSTOMER MUST VERIFY BTU CONSUMPTION AS WELL AS PRESSURE RATING. SPECIFIC GRAVITY OF NATURAL GAS = 0.64, SPECIFIC GRAVITY OF LP = 1.52

CALCULATIONS

TO CALCULATE GAS FLOW FOR OTHER THAN 1 IN.W.C. PRESSURE DROP
NEW BTU/HR = (BTU/HR AT 1 IN.W.C. PRESSURE DROP) X NEW PRESSURE DROP$^{0.5}$
TO CALCULATE GAS FLOW FOR OTHER THAN 0.64 SPECIFIC GRAVITY
NEW BTU/HR = (BTU/HR AT 0.64) X (0.64 / NEW SPECIFIC GRAVITY)$^{0.5}$

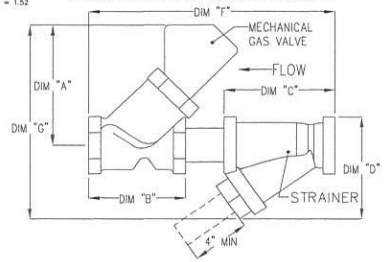

CAPTIVE-AIRE
MAINE OFFICE
PO Box 86, 179 South Rd., Topsfield, ME 04490 PHONE: (207) 796-2590 FAX: (919) 227-5545 E-MAIL: reg21@captiveaireinc.com
www.captiveaireinc.com

REVISIONS
DESCRIPTION | DATE

Thompson Point r3
PORTLAND, ME, 04101

DATE: 1/3/2017
DWG.#: 2802149
DRAWN BY: BFC-21
SCALE: 3/4" = 1'-0"
MASTER DRAWING
SHEET NO. 3

Captive-Aire
6030-ND-2-PSP-F
Item #20

RESURGAM, MAINE
CITY OF PORTLAND

Reviewed for Code Compliance
Inspections Division
Approved with Conditions
04/19/17
Date:

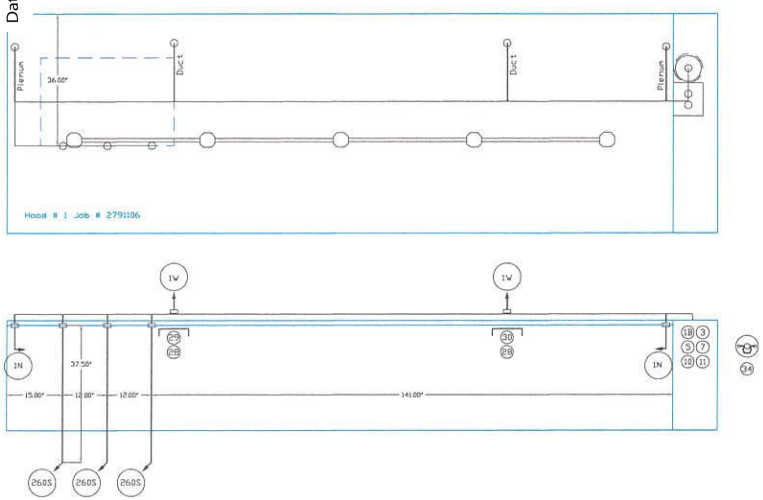

NOTES
- FIELD PIPE DROPS AS SHOWN
  SLEEVING, ELBOWS, TEES, AND NOZZLES SUPPLIED BY CAS
- RELOCATE NOZZLES IF FLOW PATTERN IS BLOCKED BY SHELVING, SALAMANDERS, ETC.
- MAXIMUM 9 ELBOWS IN SUPPLY LINE.
- MINIMUM 72 INCHES OF AGENT LINE FROM TANK TO FIRST NOZZLE.
- IF APPLICABLE, PRE-PIPED CHARBROILER DROPS ARE SHIPPED LOOSE.
- FACTORY PIPING EXTENDS A MAXIMUM OF 6" ABOVE THE TOP OF THE HOOD.

- APPLIANCE DIMENSIONS LISTED REPRESENT THE COOKING SURFACE SIZE, NOT THE OVERALL APPLIANCE SIZE.

- THIS FIRE SYSTEM COMPLIES WITH U.L. 300 REQUIREMENTS

Job #: 2791106
Job Name: Thompson Point r2
Drawn By:
System Size: ANSUL-3.0 Total FP required: 10
Hood # 1 15' 0.00" Long x 60" Wide x 30" High
Riser # 1 Size: 12" Dia.
Riser # 2 Size: 12" Dia.
Hood # 1 Metal Blow-Off Caps included.

Job #: 2802149
Job Name: Thompson Point r3
Drawn By:
System Size: ANSUL-3.0 Total FP required: 10
Hood # 1 15' 0.00" Long x 60" Wide x 30" High
Riser # 1 Size: 0" x 0"
Riser # 2 Size: 0" x 0"

LEGEND - FIRE CABINET ANSUL SYSTEM

1A	1.5 GALLON TANK
1B	3 GALLON TANK
2	OEM AUTOMAN RELEASE
3	OEM REGULATED RELEASE
4	OEM REGULATED ACTUATOR
5	ANSULEX LIQUID AGENT (3 GAL.)
6	ANSULEX LIQUID AGENT (1.5 GAL.)
7	CARTRIDGE (101-20)
8	CARTRIDGE (101-10)
9	CARTRIDGE (101-30)
9A	CARTRIDGE (LT-A-101-30)
9B	DOUBLE TANK CARTRIDGE
10	TEST LINK
11	DOUBLE MICROSWITCH
12	HOSE ASSEMBLY
1100	DUCT NOZZLE (430913)
2W	DUCT NOZZLE (419337)
1W	NOZZLE ASSEMBLY (419336)
1F	NOZZLE ASSEMBLY (419333)
1N	NOZZLE ASSEMBLY (419335)
1/2N	NOZZLE ASSEMBLY (419334)
3N	NOZZLE ASSEMBLY (419338)
245	NOZZLE ASSEMBLY (419340)
230	NOZZLE ASSEMBLY (419339)
2120	NOZZLE ASSEMBLY (419343)
290	NOZZLE ASSEMBLY (419342)
260	NOZZLE ASSEMBLY (419341)
28	DETECTOR BRACKET
29	LOW TEMP FUSIBLE LINK
30	HIGH TEMP FUSIBLE LINK
MGV	MECHANICAL GAS VALVE
EGV	ELECTRICAL GAS VALVE
34	REMOTE MANUAL PULL STATION
S	SWIVEL ADAPTOR

Range-Shelf (18"on from range) High Proximity 36.00" L x24.00" D

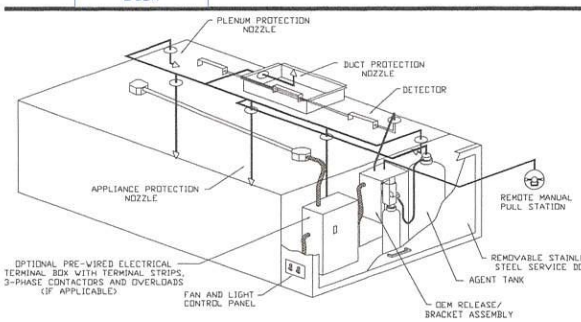

TYPICAL ANSUL R-102 SYSTEM LAYOUT

INCLUDES: FIELD INSTALLATION AND HOOKUP DURING NORMAL BUSINESS HOURS BY CERTIFIED INSTALLERS ONLY IN THE LOCATION NOTED ABOVE, TWO SITE VISITS ONLY (ONE VISIT TO SET PULL STATION & SYSTEM HOOKUP AND ONE VISIT FOR ONE TEST, ADDITIONAL VISITS WILL RESULT IN ADDITIONAL CHARGES), ONE MECHANICAL GAS VALVE PER SYSTEM AT A MAXIMUM SIZE OF 2", PERMIT, AND SYSTEM TEST.
EXCLUDES: UNION LABOR & PREVAILING WAGE (LABOR & WAGES WILL BE ADDED IF APPLICABLE), GAS VALVE INSTALLATION, ELECTRICAL HOOKUP AND CONNECTIONS, HANGING OF FIRE CABINET, SHUNT TRIP, HANDHELD EXTINGUISHERS, ON-SITE RE-PIPING DUE TO EQUIPMENT LAYOUT CHANGES.

NOTES
- FIELD PIPE DROPS AS SHOWN
  SLEEVING, ELBOWS, TEES, AND NOZZLES SUPPLIED BY CAS
- RELOCATE NOZZLES IF FLOW PATTERN IS BLOCKED BY SHELVING, SALAMANDERS, ETC.
- MAXIMUM 9 ELBOWS IN SUPPLY LINE.
- MINIMUM 72 INCHES OF AGENT LINE FROM TANK TO FIRST NOZZLE.
- IF APPLICABLE, PRE-PIPED CHARBROILER DROPS ARE SHIPPED LOOSE.
- FACTORY PIPING EXTENDS A MAXIMUM OF 6" ABOVE THE TOP OF THE HOOD.

- APPLIANCE DIMENSIONS LISTED REPRESENT THE COOKING SURFACE SIZE, NOT THE OVERALL APPLIANCE SIZE.

- THIS FIRE SYSTEM COMPLIES WITH U.L. 300 REQUIREMENTS

SPECIFICATIONS

THE RESTAURANT FIRE SUPPRESSION SYSTEM SHALL BE THE PRE-ENGINEERED TYPE WITH A FIXED NOZZLE AGENT DISTRIBUTION NETWORK. IT SHALL BE LISTED WITH UNDERWRITERS LABORATORIES, INC. (UL)

THE SYSTEM SHALL BE CAPABLE OF AUTOMATIC DETECTION AND ACTUATION WITH LOCAL OR REMOTE MANUAL ACTUATION. ACCESSORIES SHALL BE AVAILABLE FOR MECHANICAL OR ELECTRICAL GAS LINE SHUT-OFF APPLICATIONS.

THE EXTINGUISHING AGENT SHALL BE A POTASSIUM CARBONATE, POTASSIUM ACETATE-BASED FORMULATION DESIGNED FOR FLAME KNOCKDOWN AND SECUREMENT OF GREASE RELATED FIRES. IT SHALL BE AVAILABLE IN PLASTIC CONTAINERS WITH INSTRUCTIONS FOR LIQUID AGENT HANDLING AND USAGE.

THE REGULATED RELEASE MECHANISM SHALL BE COMPATIBLE WITH A FUSIBLE LINK DETECTION SYSTEM. THE FUSIBLE LINK SHALL BE SELECTED AND INSTALLED ACCORDING TO THE OPERATING TEMPERATURE IN THE VENTILATING SYSTEM. THE FUSIBLE LINK SHALL BE SUPPORTED BY A DETECTOR BRACKET/ LINKAGE ASSEMBLY.

REVISIONS

DESCRIPTION	DATE

CAPTIVE-AIRE
MAINE OFFICE
PO Box 86, 179 South Rd., Topsfield, ME, 04490 PHONE: (207) 796-2590 FAX: (919) 227-5948 EMAIL: mgr1@captiveaire.com
www.captiveaire.com

Thompson Point r3
PORTLAND, ME, 04101

DATE: 1/3/2017
DWG.#: 2802149
DRAWN BY: BFC-21
SCALE: 3/4" = 1'-0"
MASTER DRAWING
SHEET NO. 4

CITY OF PORTLAND, MAINE
PLANNING & URBAN DEVELOPMENT
Reviewed for Code Compliance
Inspections Division
Approved with Conditions
Date: 04/19/17

'AN INFORMATION – Job#2802149

UNIT NO.	TAG	FAN UNIT MODEL #	CFM	E.S.P.	RPM	H.P.	B.H.P.	ø	VOLT	F.L.A	WEIGHT (LBS.)	SONES
1		DU280HFA	3000	1.500	1142	5.000	1.6640	3	208	15.0	167	17.9

MUA FAN INFORMATION – Job#2802149

FAN UNIT NO.	TAG	FAN UNIT MODEL #	BLOWER	HOUSING	MIN CFM	DESIGN CFM	E.S.P.	RPM	H.P.	B.H.P.	ø	VOLT	F.L.A	WEIGHT (LBS.)	SONES	BURNER EFFICIENCY(%)
2		A2-D250-G15	G15-PB	A2-D250	2000	2700	0.500	747	2.000	0.9720	3	208	6.1	893	10.7	92

GAS FIRED MAKE-UP AIR UNIT(S)

FAN UNIT NO.	TAG	INPUT BTUs	OUTPUT BTUs	TEMP. RISE	REQUIRED INPUT GAS PRESSURE	GAS TYPE
2		225039	207036	71 deg F	7 in. w.c. - 14 in. w.c.	Natural

FAN OPTIONS

FAN UNIT NO.	TAG	OPTION (Qty. - Descr.)
1		1 - Grease Box
		1 - Full Crating For Exhaust Fans
		1 - 3 Year Extended Motor Warranty
		1 - Fan Base Ceramic Seal - For Grease Ducts
2		1 - AC Interlock Relay - 24VAC Coil
		1 - Motorized Backdraft Damper for A2-D Housing
		1 - Full Crating For Commercial Heater
		1 - Low Fire Start
		1 - Inlet Pressure Gauge, 0-35"
		1 - Manifold Pressure Gauge, -5 to 15" wc
		1 - 3 Year Extended Motor Warranty
		1 - Extra Set of Belts
		1 - Separate 120V Wiring Package (Required and used only for DCV or Prewire with VFD) - Three Phase Only
		1 - Size 2 Direct Fired Heater Low CFM Profile Package. Used on Heaters under 2500 cfm.

FAN ACCESSORIES

FAN UNIT NO.	TAG	EXHAUST			SUPPLY			
		GREASE CUP	GRAVITY DAMPER	WALL MOUNT	SIDE DISCHARGE	GRAVITY DAMPER	MOTORIZED DAMPER	WALL MOUNT
1		YES						
2							YES	

CURB ASSEMBLIES

NO.	ON FAN	WEIGHT	ITEM	SIZE
1	# 1	34 LBS	Curb	26.500"W x 26.500"L x 24.000"H 3.000-12.000 Pitch Vented Hinged
2	# 2	88 LBS	Curb	31.000"W x 79.000"L x 24.000"H 3.000-12.000 Pitch Along Width, Right Insulated

FAN SOUND INFORMATION

FAN UNIT NO.	MOTOR	RPM	LWA	SONES	DBA	DISTANCE FT	OCTAVE 1	OCTAVE 2	OCTAVE 3	OCTAVE 4	OCTAVE 5	OCTAVE 6	OCTAVE 7	OCTAVE 8
1	Exhaust	1142	81.2	17.9	69.7	5	76.5	88.7	86.6	74.7	70.1	67.7	61.9	57.9
2	Supply	747	72.9	10.7	61.4	5	75.4	76.6	72.9	69.9	68	63	58.7	53.5

REVISIONS

DESCRIPTION	DATE

CAPTIVE-AIRE
MAINE OFFICE
PO Box 86, 179 South Rd., Topsfield, ME. 04490 PHONE: (207) 796-2590 FAX: (919) 227-5849 EMAIL: mp216@captiveaire.com
www.captiveaire.com

Thompson Point r3
PORTLAND, ME, 04101

DATE: 1/3/2017
DWG.#: 2802149
DRAWN BY: BFC-21
SCALE: 3/4" = 1'-0"
MASTER DRAWING
SHEET NO. 5

Reviewed for Code Compliance
Inspections Division
Approved with Conditions
Date: 04/19/17

FAN #1 DUD0DHEA - EXHAUST FAN

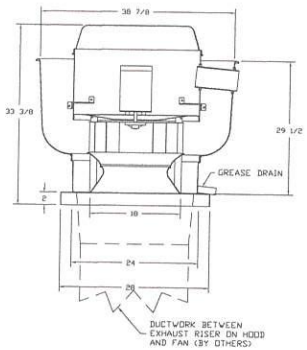

FEATURES:

- DIRECT DRIVE CONSTRUCTION (NO BELTS/PULLEYS)
- ROOF MOUNTED FANS
- RESTAURANT MODEL
- UL705 AND UL762
- VARIABLE SPEED CONTROL
- INTERNAL WIRING
- WEATHERPROOF DISCONNECT
- THERMAL OVERLOAD PROTECTION (SINGLE PHASE)
- HIGH HEAT OPERATION 300°F (149°C)
- GREASE CLASSIFICATION TESTING

NORMAL TEMPERATURE TEST
EXHAUST FAN MUST OPERATE CONTINUOUSLY WHILE EXHAUSTING AIR AT 300°F (149°C) UNTIL ALL FAN PARTS HAVE REACHED THERMAL EQUILIBRIUM, AND WITHOUT ANY DETERIORATING EFFECTS TO THE FAN WHICH WOULD CAUSE UNSAFE OPERATION

ABNORMAL FLARE-UP TEST
EXHAUST FAN MUST OPERATE CONTINUOUSLY WHILE EXHAUSTING BURNING GREASE VAPORS AT 600°F (316°C) FOR A PERIOD OF 15 MINUTES WITHOUT THE FAN BECOMING DAMAGED TO ANY EXTENT THAT COULD CAUSE AN UNSAFE CONDITION.

OPTIONS
GREASE BOX
FULL CRATING FOR EXHAUST FANS
3 YEAR EXTENDED MOTOR WARRANTY
FAN BASE CERAMIC SEAL - FOR GREASE DUCTS

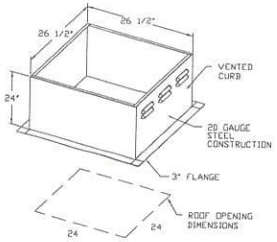

PITCHED CURBS ARE AVAILABLE FOR PITCHED ROOFS.

SPECIFY PITCH:
EXAMPLE: 7/12 PITCH = 30° SLOPE

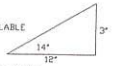

FAN#1 - EXHAUST PERFORMANCE CURVES.

3000 CFM, 1.5 SP @ 1142 RPM and 1.664 BHP at 25 feet and 70 deg F
* Please note that these curves were adjusted for job specific temperature and altitude.

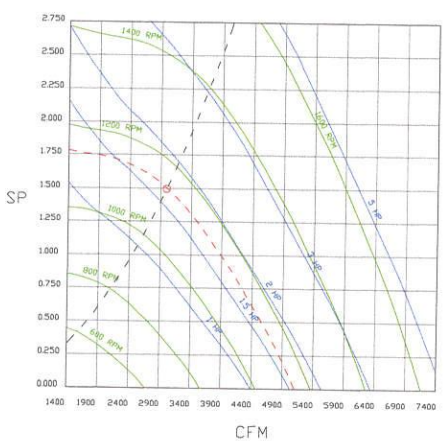

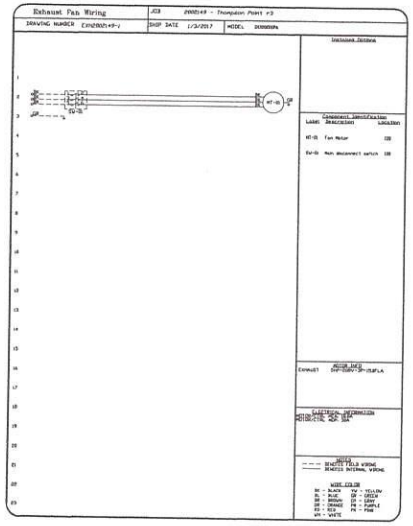

REVISIONS

DESCRIPTION	DATE

CAPTIVE-AIRE
MAINE OFFICE
PO Box 86, 179 South Rd., Topsfield, ME 04490 PHONE: (207) 796-2590 FAX: (919) 227-5946 EMAIL: mp216@captiveaire.com
www.captiveaire.com

Thompson Point r3
PORTLAND, ME, 04101

DATE: 1/3/2017
DWG.#: 2802149
DRAWN BY: BFC-21
SCALE: 3/4" = 1'-0"
MASTER DRAWING
SHEET NO. 6

Captive-Aire

Item #20

RESURGAM, MAINE
CITY OF PORTLAND
Reviewed for Code Compliance
Inspections Division
Approved with Conditions
Date: 04/19/17

-GAS - HEATER
RED HEATED MAKE UP AIR UNIT WITH 15" BLOWER
WITH EZ FILTERS
3. DOWN DISCHARGE - AIR FLOW RIGHT -> LEFT
4. COOLING INTERLOCK RELAY. 24VAC COIL. 120V CONTACTS. LOCKS OUT BURNER CIRCUIT WHEN AC IS ENERGIZED.
5. MOTORIZED BACK DRAFT DAMPER 20"25" X 24" FOR SIZE 2 STANDARD & MODULAR DIRECT FIRED HEATERS W/EXTENDED SHAFT. STANDARD GALVANIZED CONSTRUCTION. 3/4" REAR FLANGE. LF120S ACTUATOR INCLUDED
6. FULL CRATING FOR COMMERCIAL HEATERS FOR SHIPPING.
7. LOW FIRE START. ALLOWS THE BURNER CIRCUIT TO ENERGIZE WHEN THE MODULATION CONTROL IS IN A LOW FIRE POSITION.
8. GAS PRESSURE GAUGE. 0-35". 2.5" DIAMETER. 1/4" THREAD SIZE.
9. GAS PRESSURE GAUGE. -5 TO +15 INCHES WC. 2.5" DIAMETER. 1/4" THREAD SIZE
10. 3 YEAR EXTENDED WARRANTY FOR FAN MOTOR. PARTS ONLY; DOES NOT INCLUDE LABOR.
11. EXTRA SET OF V-BELTS. ONLY TO BE ORDERED AS FAN OPTION AT TIME FAN IS ORDERED.
12. SEPARATE 120VAC WIRING PACKAGE FOR MAKE-UP AIR UNITS. OPTION MUST BE SELECTED WHEN MOUNTING VFD IN PREWIRE PANEL OR WITH BCV PACKAGE. PROVIDES SEPARATE 120VAC INPUT TO SUPPLY FAN. THIS 120V SIGNAL MUST BE RUN BY ELECTRICIAN FROM BCV TO MUA SWITCH.
13 PROFILE PLATE CONFIGURATION FOR SIZE 2 DIRECT FIRED UNIT FOR LOW CFM APPLICATIONS.

SUPPLY SIDE HEATER INFORMATION:

WINTER TEMPERATURE = 4°F. TEMP RISE = 71°F.
BTUs CALCULATED OFF STANDARD AIR DENSITY.
OUTPUT BTUs AT ALTITUDE OF 0.0 ft. = 207036
INPUT BTUs AT ALTITUDE OF 0.0 ft. = 225839

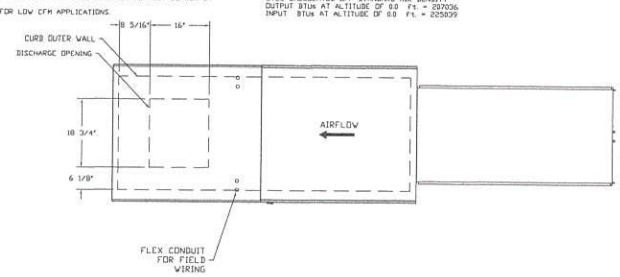

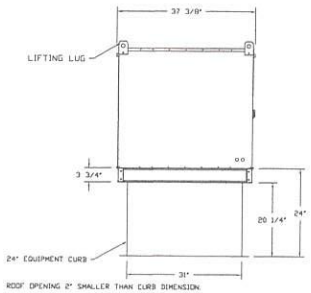

ROOF OPENING 2" SMALLER THAN CURB DIMENSION.

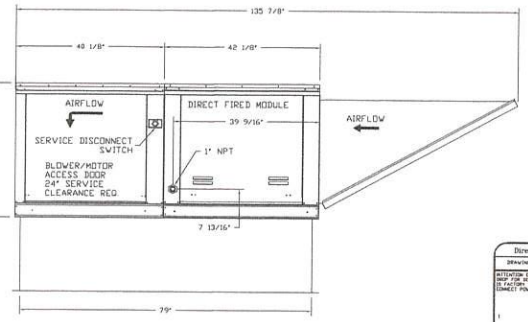

Direct Fired (DF) Profile Plate Assembly

Direct Fired Profile Plate Specifications:

Description:
Direct Fired burners shall have patented (US Patent No. US6425523B2), self-adjusting profile plates designed to ensure proper velocity and pressure drop across the burner. Profile plates shall allow burners to achieve clean combustion by lowering carbon levels to a maximum of 30ppm of carbon monoxide (CO), and 83ppm of Nitrogen dioxide (NO2).

Applications:
Springloaded burner profile plates are engineered to automatically react to the momentum of a fresh air stream, without the need for any motors or actuators to mechanically adjust them. With this feature, all DF units are designed for demand control ventilation (DCV) requirements.

Certifications:
All profile plate assemblies shall be included in the DF unit's ETL listing and comply with combined safety standards ANSI Z83.4 and CSA 3.7 (non-recirculating DF heaters) and ANSI Z83.18 (recirculating DF heaters).

General Construction:
-Profile plates shall be formed from G90 galvanized steel.
-Profile plates shall vary in size per unit.
-Profile plates shall be mounted along the same plane as the discharge of the burner.
-Design shall incorporate property torquing, permanently mounted spring hinges.
-Spring hinges shall be made from plated steel.

FAN#2 - HEATER PERFORMANCE CURVES.

2700 CFM, 0.546 SP @ 747 RPM and 0.972 BHP at 25 feet and 75 deg F
* Please note that these curves were adjusted for job specific temperature and altitude.

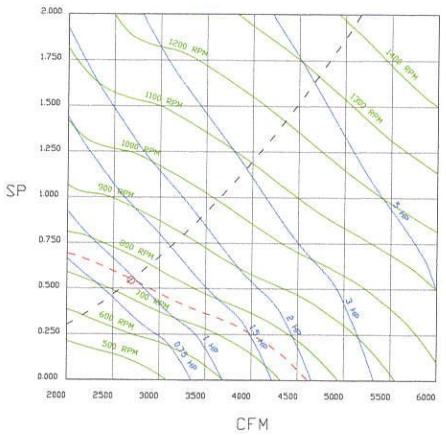

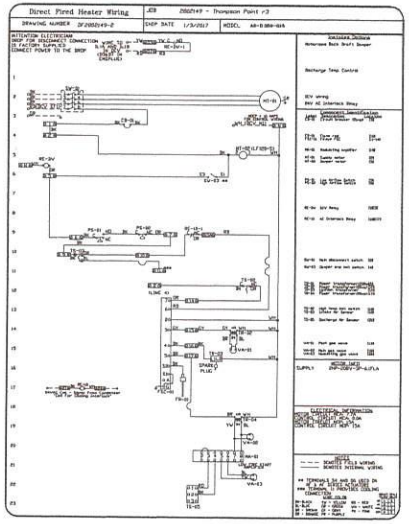

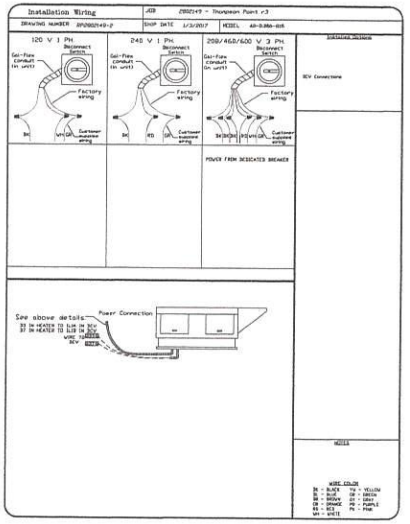

REVISIONS

DESCRIPTION	DATE

Captive-Aire

CAPTIVE-AIRE

MAINE OFFICE
PO Box 86, 179 South Rd., Topsfield, ME. 04490 PHONE: (207) 796-2590 FAX: (919) 227-5346 EMAIL: mg216@capitiveaire.com
www.captiveaire.com

Thompson Point r3
PORTLAND, ME, 04101

DATE: 1/3/2017
DWG.#: 2802149
DRAWN BY: BFC-21
SCALE: 3/4" = 1'-0"
MASTER DRAWING
SHEET NO. 7

Item #20

Reviewed for Code Compliance
Inspections Division
Approved with Conditions
Date: 04/19/17

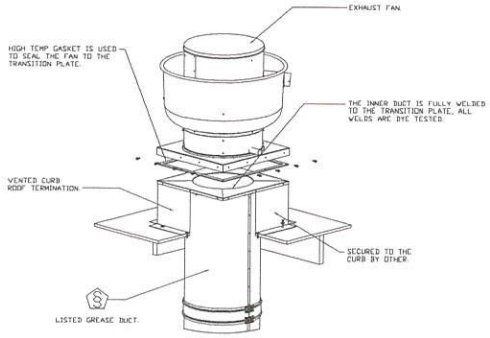

GREASE DUCT SPECIFICATIONS:
PROVIDE GREASE DUCT EQUAL TO CAPTIVEAIRE SYSTEMS MODEL "DW" ROUND 20 GAUGE 430 STAINLESS STEEL DUCTWORK. MODEL "DW" IS LISTED TO UL-1978 AND IS INSTALLED USING "V" CLAMP LOCKING CONNECTIONS SEALED WITH 3M FIRE BARRIER 2000 PLUS. MODEL "DW" DOES NOT REQUIRE WELDING PROVIDING IT HAS BEEN INSTALLED PER THE MANUFACTURES INSTALLATION GUIDE.
PROVIDE RATED ACCESS DOORS AT EVERY CHANGE IN DIRECTION AND EVERY 12' ON CENTER. PER MANUFACTURES LISTING MODEL "DW" HORIZONTAL RUNS LESS THAN 75 FT. CAN BE SLOPED 1/16" PER 12", HORIZONTAL RUNS MORE THAN 75 FT. CAN BE SLOPED 3/16" PER 12". DUCT SHOULD BE SLOPED AS MUCH AS POSSIBLE TO REDUCE THE CHANCE OF GREASE ACCUMULATION IN HORIZONTAL RUNS.

IF THE DUCT IS WITHIN 18 INCHES OF COMBUSTIBLE MATERIAL, PROVIDE UL-2221 LISTED DOUBLE WALL GREASE DUCT EQUAL TO CAPTIVEAIRE SYSTEMS MODEL "DW- 2R, 3R, OR 3Z" ROUND 20 GAUGE 430 STAINLESS INNER DUCT INSULATED WITH A 24 GAUGE 430 STAINLESS OUTER SHELL.

CUSTOMER APPROVAL TO MANUFACTURE:

- Approved as Noted ☐
- Approved with NO Exception Taken ☐
- Revise and Resubmit ☐

SIGNATURE _____
Your Title _____ Date _____

REVISIONS

DESCRIPTION	DATE

CAPTIVEAIRE
MAINE OFFICE
www.capitaleaire.com
PO Box 86, 179 South Rd., Topsfield, ME. 04490 PHONE: (207) 796-2590 FAX: (919) 227-5348 EMAIL: mp216@capitaleaire.com

Thompson Point r-3
PORTLAND, ME. 04101

DATE: 1/3/2017
DWG.#: 2802149
DRAWN BY: BFC-21
SCALE: 3/4" = 1'-0"
MASTER DRAWING
SHEET NO. 8

Reviewed for Code Compliance
Inspections Division
Approved with Conditions
Date: 04/19/17

Captive-Aire

Item #20

...AL PACKAGES - Job#2802149

NO.	TAG	PACKAGE #	LOCATION	SWITCHES		OPTION	FANS CONTROLLED				
				LOCATION	QUANTITY		TYPE	?	H.P.	VOLT	FLA
1		DCV-1111	Utility Cabinet Right	04 - Utility Cabinet Right	1 Light	Smart Controls DCV	Exhaust	3	3.000	208	15.0
				Hood # 1	1 Fan		Supply	3	2.000	208	6.1

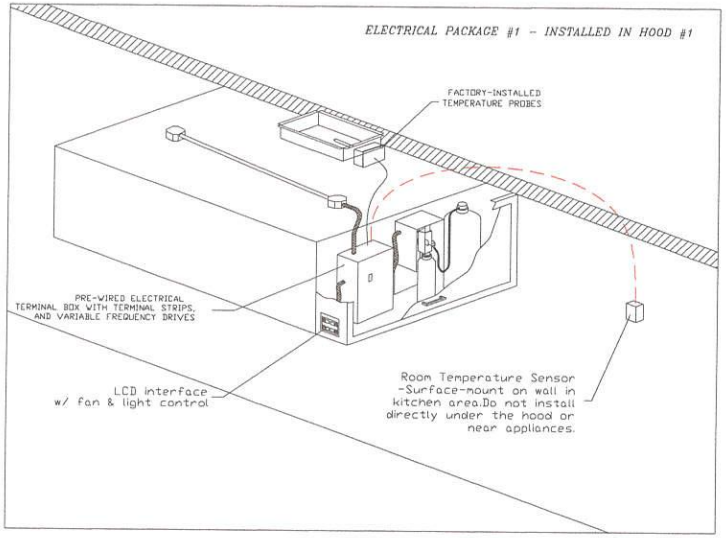

Duct Temp Sensor to be installed in every exhaust riser. All Duct Temp Sensors and Hood Lights to be wired back to SC-EMS Electrical Control Box.

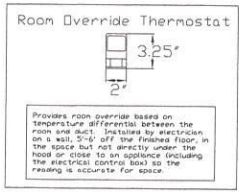

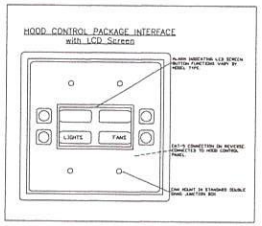

EMS Specification
Demand Ventilation System
Application:
The EMS Demand Ventilation System is designed to automatically reduce exhaust and supply airflow quantities, while ensuring hood performance is maintained. The EMS uses Variable Frequency Drives (VFD) and temperature sensors in the exhaust ducts to modulate the fans speed during cooking operation and maximize energy savings. The EMS LCD screen interface provides fan(s) control, system configuration, and diagnostic information.
Construction:
The EMS includes:
- A smart Controller
- LCD Screen Interface
- Duct Temperature Sensor(s)
- Room Temperature Sensor
- Variable Frequency Drive(s)

Controls will be listed by ETL to UL standard 508A.
The system includes a LCD screen interface for fan(s) and hood lights control, wash control (if applicable), gas valve reset, programmable schedule, Max Air Override function, Preparation Time mode, Cool Down mode, and diagnostics including VFD status. The LCD screen shows descriptive plain text explaining the functions or values. The LCD screen interface will be installed on the face of the hood, on the face of the utility cabinet or on the face of a wall mounted control enclosure.
Control enclosure will be NEMA 1 rated and listed for installation inside of the exhaust hood utility cabinet.
Control enclosure may be constructed of stainless steel or painted steel.
The smart controller will constantly monitor the exhaust air temperature through the riser mounted temperature sensor and modulate the fan speeds accordingly.
A room temperature sensor will also be provided for field installation in the kitchen space in order to start the fan(s) based on the temperature differential between the room and the exhaust air in the duct rather than fixed set-points.
A Preparation Time Mode is available for morning operation: dedicated make-up air will be locked out only allowing the use of transfer air during this mode. Exhaust fan(s) will run at low CFM while maintaining a balanced kitchen pressure.
A Cool Down Mode is designed for equipment cool-down period at the end of the daily cooking operations: similarly to Preparation Time mode, dedicated make-up air will be locked out only allowing the use of transfer air during this mode. Exhaust fan(s) will run at low CFM while maintaining a balanced kitchen pressure.
Fan maximum/ minimum speeds will be adjustable for proper kitchen balance. Fan direction change is also available from the smart controller configuration menu without need for rewiring.
Duct Temperature Sensor(s) will be mounted in the exhaust hood riser(s). Temperature probe will be constructed of Stainless Steel. System will be factory pre-set to modulate fan speed within a range of 45°F for 600°F and 700°F cooking applications and a range of 5°F for 400°F cooking applications. Setpoints are fully adjustable through the touch screen interface based on application needs.
The Max Air Override will have an adjustable timeout value.
The panels include color coded wiring with as-built wiring diagrams and spare terminals controlled by the fire system micro switch. The panel is factory pre-wired to shut supply fans down in a fire condition. Options to turn ON the exhaust fans or turn off the hood lights in a fire condition will be configurable through the smart controller, but only through a password protected menu to prevent any changes after a fire inspection has been performed.

REVISIONS

DESCRIPTION	DATE

CAPTIVE-AIRE
MAINE OFFICE
PO Box 86, 179 South Rd., Topsfield, ME. 04490 PHONE: (207) 796-2590 FAX: (919) 227-5946 EMAIL: mp21@captiveaire.com
www.captiveaire.com

Thompson Point r3
PORTLAND, ME, 04101

DATE: 1/3/2017
DWG.#: 2802149
DRAWN BY: BFC-21
SCALE: 3/4" = 1'-0"
MASTER DRAWING
SHEET NO. 9

Reviewed for Code Compliance
Inspections Division
Approved with Conditions
Date: 04/19/17

CASlink Monitor and Control

- Head unit panel to support communications to cloud-based Building Management System.
- Head Control Panel to allow cloud-based Building Management System to monitor real time parameters outlined as MONITOR in the points list.
- Head Control Panel to allow cloud-based Building Management System to control parameters outlined as CONTROL in the points list.

MONITORING AND CONTROL POINTS LIST

RCU Packages	Points/Sets.
Room Temperature	#OUT/TOR
Duct Temperature(s)	#OUT/TOR
Mix Discharge Temperature	#OUT/TOR
Kitchen RTU Discharge Temperature	#OUT/TOR
Fan Speed	#OUT/TOR
Fan Amperage	#OUT/TOR
Fan Power	#OUT/TOR
VFD Faults	#OUT/TOR
Controller Faults	#OUT/TOR
Fan Faults	#OUT/TOR
Fan Status	#OUT/TOR
Damper Faults	#OUT/TOR
Pilot Dog Percentages	#OUT/TOR
Fire Condition	#OUT/TOR
UL900 Fire System	#OUT/TOR
Building Pressure	#OUT/TOR
Fire Button(s)	#OUT/TOR # CONTROL
Light Button(s)	#OUT/TOR # CONTROL
Fan Button	#OUT/TOR # CONTROL
Light Button	#OUT/TOR # CONTROL
Fan Button	#OUT/TOR # CONTROL

DC Packages	Points/Sets.
Room Temperature(s)	#OUT/TOR
Duct Temperature(s)	#OUT/TOR
Mix Discharge Temperature	#OUT/TOR
Kitchen RTU Discharge Temperature	#OUT/TOR
Controller Faults	#OUT/TOR
Fan Faults	#OUT/TOR
Fan Status	#OUT/TOR
PCU Faults	#OUT/TOR
PCU Pilot Dog Percentages	#OUT/TOR
Fan Condition	#OUT/TOR
UL900 Fire System	#OUT/TOR
Building Pressure	#OUT/TOR
Fan Button(s)	#OUT/TOR # CONTROL
Light Button(s)	#OUT/TOR # CONTROL
Fan Button	#OUT/TOR # CONTROL

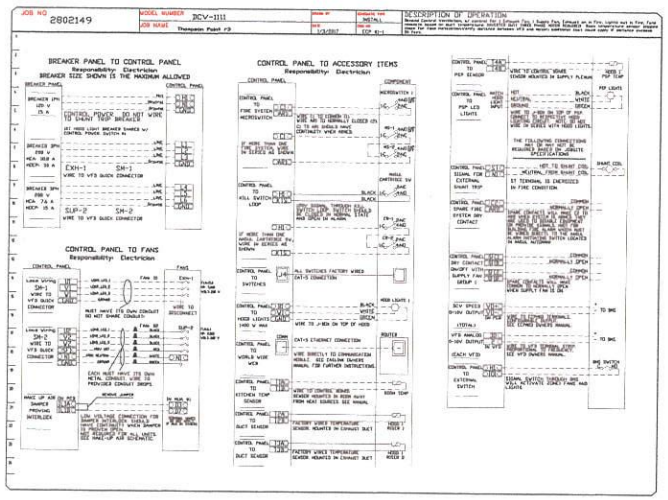

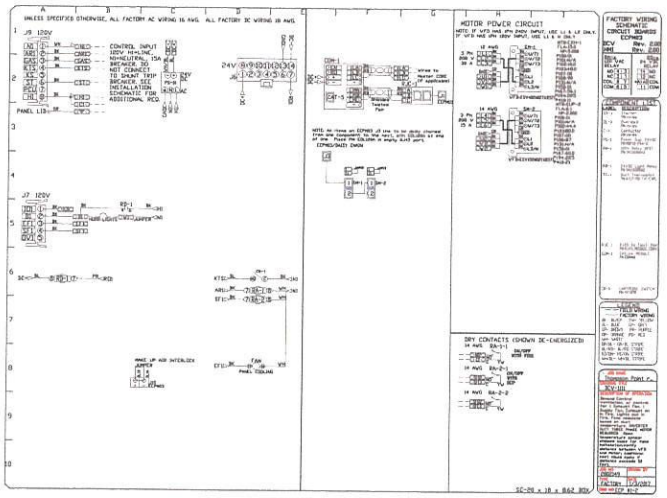

System Design Verification (SDV)

If ordered, CAS Service will perform a System Design Verification (SDV) once all equipment has had a complete start up per the Operation and Installation Manual. Typically, the SDV will be performed after all inspections are complete.

Any field related discrepancies that are discovered during the SDV will be brought to the attention of the general contractor and corresponding trades on site. These issues will be documented and forwarded to the appropriate sales office. If CAS Service has to resolve a discrepancy that is a field issue, the general contractor will be notified and billed for the work. Should a return trip be required due to any field related discrepancy that cannot be resolved during the SDV, there will be additional trip charges.

During the SDV, CAS Service will address any discrepancy that is the fault of the manufacturer. Should a return trip be required, the general contractor and appropriate sales office will be notified. There will be no additional charges for manufacturer discrepancies.

REVISIONS

DESCRIPTION	DATE

Captive-Aire
MAINE OFFICE
PO Box 86, 179 South Rd., Topsfield, ME. 04490 PHONE: (207) 796-2590 FAX: (919) 227-5949 EMAIL: ms21@capitaleaire.com
www.capitaleaire.com

Thompson Point r3
PORTLAND, ME, 04101

DATE: 1/3/2017
DWG.#: 2802149
DRAWN BY: BFC-21
SCALE: 3/4" = 1'-0"
MASTER DRAWING
SHEET NO. 10

Item #20