NOTE:

ALL TABLES FOR DINING AND WINE TASTING WILL BE ADA ACCESSIBLE . THESE TABLES WILL BE DISPERSED THROUGHOUT THE CELLARDOOR SPACE AND WILL PROVIDE ACCESSIBLE SEATING FOR MORE THAN 5% OF THE TOTAL SEATING AVAILABLE.

FIXED COUNTER SERVICE

DINING SIDE: 20 TOTAL SEATS - 1 IS ACCESSIBLE = 5%
TASTING SIDE: 52 TOTAL SEATS - 3 ARE ACCESSIBLE = 6%

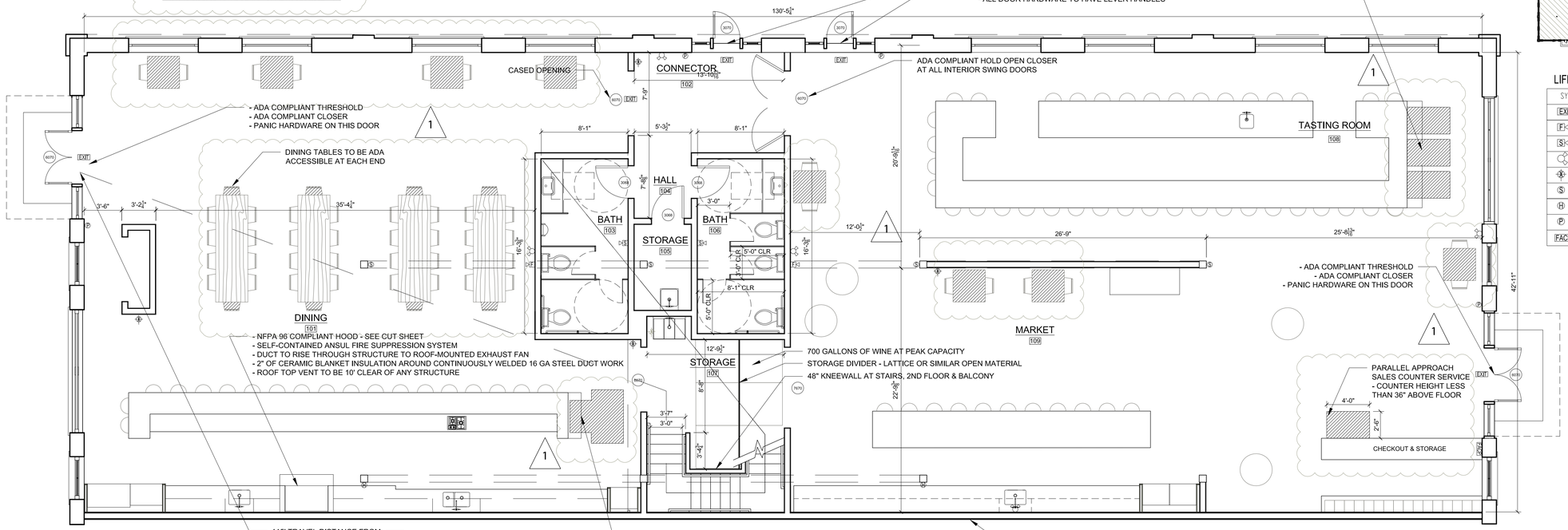

5,560 SQFT	LOWER LEVEL
486 SQFT	UPPER LEVEL

1 / A100 CELLARDOOR FIRST FLOOR PLAN
SCALE: 3/16" = 1' - 0"

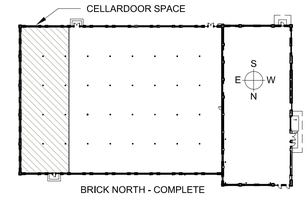

LIFE SAFETY SYSTEM KEY

SYMBOL	DESCRIPTION
EXIT	EXIT SIGN (SELF ILLUMINATED)
F	FIRE ALARM AUDIO/VISUAL DEVICE
S	FIRE ALARM VISUAL STROBE ONLY
	REMOTE EMERGENCY LIGHT
	FIRE EXTINGUISHER LOCATION
S	SUGGESTED SMOKE DETECTOR LOCATION
H	HEAT DETECTOR - MOUNTED TO POST
P	PULL STATION LOCATION
FACP	FIRE ALARM CONTROL PANEL

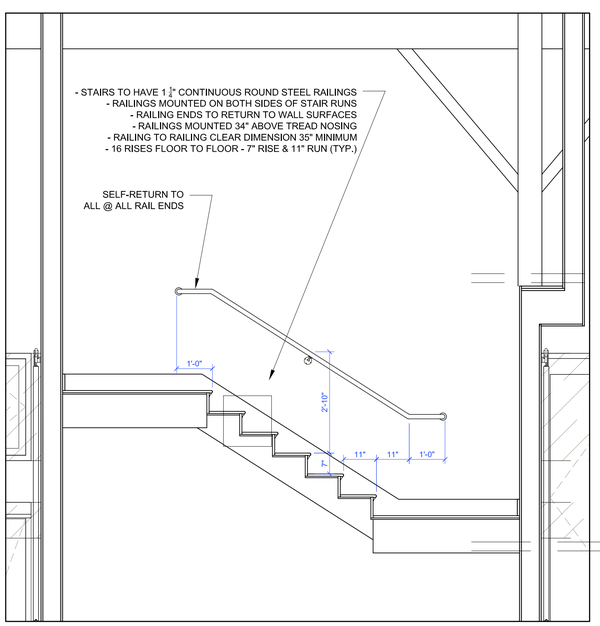

2 / A100 TYPICAL STAIR & RAILING DETAIL
SCALE: 1/2" = 1' - 0"

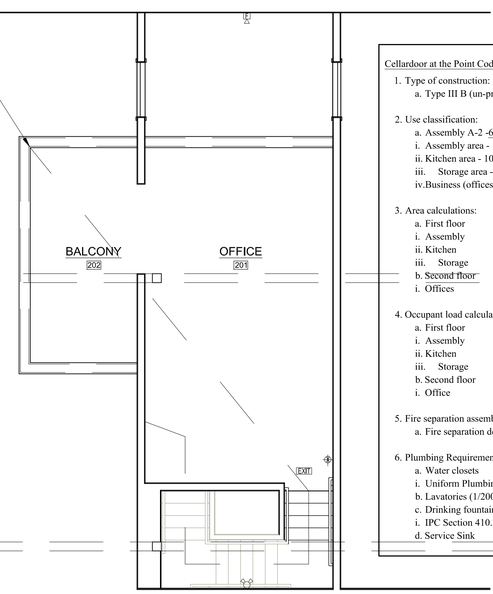

3 / A100 CELLARDOOR SECOND FLOOR PLAN
SCALE: 3/16" = 1' - 0"

Cellardoor at the Point Code Info:

1. Type of construction:
   a. Type III B (un-protected)

2. Use classification:
   a. Assembly A-2 -6,046sf gross
   i. Assembly area - 15sf/person gross
   ii. Kitchen area - 100sf/person
   iii. Storage area - 300sf/person
   iv. Business (offices) area - 100sf/person

3. Area calculations:
   a. First floor
   i. Assembly 3,629sf gross
   ii. Kitchen 1,717sf gross
   iii. Storage 700sf gross
   b. Second floor
   i. Offices 448 sf gross

4. Occupant load calculations: 266 total occupants
   a. First floor
   i. Assembly 242 occupants
   ii. Kitchen 17
   iii. Storage 2
   b. Second floor
   i. Office 5

5. Fire separation assemblies:
   a. Fire separation demising wall between tenants

6. Plumbing Requirements
   a. Water closets
   i. Uniform Plumbing Code 3WC (w) & 2 WC + 1 Urinal (m)
   b. Lavatories (1/200) 2
   c. Drinking fountains Not Required
   i. IPC Section 410.3
   d. Service Sink 1

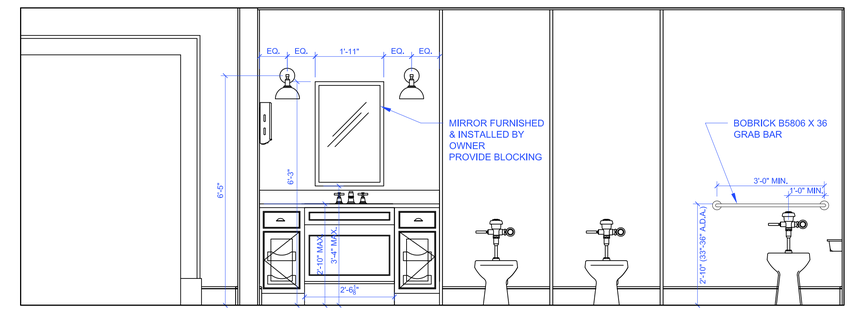

4 / A100 ADA COMPLIANT BATHROOM ELEVATIONS
SCALE: 1/2" = 1' - 0"

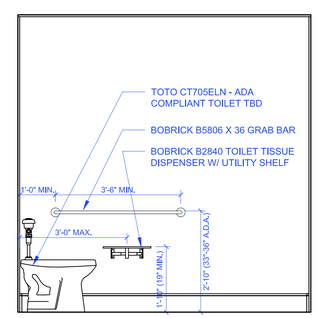

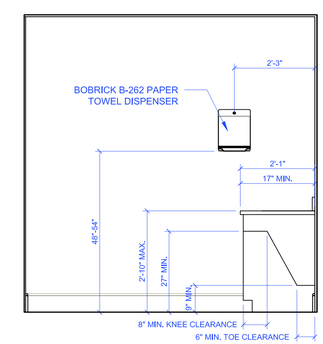

5 / A100 ADA COMPLIANT BATHROOM ELEVATIONS
SCALE: 1/2" = 1' - 0"

ISSUED FOR PRICING & FOR CONSTRUCTION

Phi HOME DESIGNS
446 WEST STREET
ROCKPORT, ME 04856
TEL: 207 230 0034
FAX: 207 230 0274
PHIHOMEDESIGNS.COM

©PHI HOME DESIGNS LLC

CELLARDOOR AT THE POINT
THOMPSON'S POINT PORTLAND, MAINE
OWNER: CELLARDOOR WINERY

REGISTERED ARCHITECT PETER T. GROSS No. 1526 STATE OF MAINE

REVISION DATE: MARCH 18, 2016	1
DATE: FEBRUARY 9, 2016	
DRAWN BY: CG	
CHECKED BY: ECD	
LIFE SAFETY DRAWINGS	
LS100	