| LABEL 1 HR | W02A | W02B | 1 HR NON-BEARING PARTITION<br>DESIGN NUMBER - U419<br>SOUND - N/A |
|---|---|---|---|
| | 3 5/8" | 6" | |

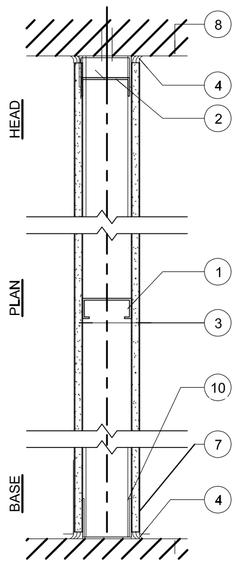


1. **STUDS -** CHANNEL-SHAPED, MIN 6" WIDE BY 1-1/4" DEEP WITH 5/16" FOLDED BACK RETURN FLANGE LEGS. FABRICATED FROM NO. 16 MSG GALV STEEL. MAX STUD SPACING 16" O.C. STUDS TO BE CUT 1" LESS THAN ASSEMBLY HEIGHT.
2. **CEILING RUNNER -** CHANNEL-SHAPED TOP TRACK, MIN. 3 5/8" WIDE BY 1 1/4" DEEP, FABRICATED FROM NO. 20 MSG GALV STEEL. TOP TRACK SITS INSIDE VERTICALLY SLOTTED HEAD TRACK. ATTACHED TO CEILIN WITH FASTENERS, 24" O.C. MAX. GYPSUM AND VERTICAL STUDS FASTENED TO TOP TRACK ONLY
3. **TYPE X GYP BOARD** 5/8 IN. THICK, 4 FT WIDE. GYPSUM BOARD SECURED TO STUDS WITH 1" LONG TYPE S-12 STEEL SCREWS SPACED 12" O.C. GYPSUM BOARD JOINTS ORIENTED VERTICALLY, LOCATED OVER STUDS AND OFFSET BETWEEN LAYERS. GYP HELD UP FROM FLOOR MIN 1/4" TO 3/8" FOR INSTALLATION OF ACOUSTIC SEALANT - TYPICAL.
4. **CAULKING AND SEALANTS** A BEAD OF ACOUSTICAL SEALANT APPLIED AROUND THE PARTITION PERIMETER FOR SOUND CONTROL, BOTH SIDES OF WALL.
5. **BLOCKING - (NOT SHOWN** WOOD BLOCKING AS NEEDED
6. **TAPE AND COMPOUND - (NOT SHOWN** VINYL, DRY OR PREMIXED JOINT COMPOUND, APPLIED IN TWO COATS TO JOINTS AND SCREW HEADS, PAPER TAPE, 2 IN. WIDE, EMBEDDED IN FIRST LAYER OF COMPOUND OVER ALL JOINTS.
7. **BASE** 6" vinyl
8. Underside of roof deck or beam
10. **FLOOR RUNNER -** CHANNEL-SHAPED RUNNERS, MIN. 3 5/8" WIDE W/ DEE LEGS, FABRICATED FROM NO. 20 MSG GALV STEEL. ATTACHED TO FLOOR WITH FASTENERS, 24" O.C. MAX.

# W1

1 / A1.02 WALL TYPE
1 1/2" = 1'-0"

| LABEL 1 HR | W02A | W02B | 1 HR NON-BEARING PARTITION<br>DESIGN NUMBER - U419<br>SOUND - N/A |
|---|---|---|---|
| | 3 5/8" | 6" | |

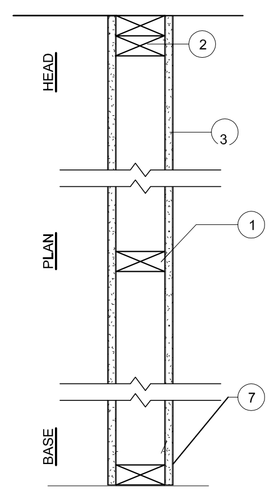


1. **STUDS -** 2x4 or 2x6- coordinate with plumbing
2. **Double top plate at bearing walls -**
3. **GYP BOARD -** $\frac{1}{2}$" or $\frac{5}{8}$"
5. **BLOCKING - (NOT SHOWN)**
6. **TAPE AND COMPOUND - (NOT SHOWN)** COMPOUND, APPLIED IN TWO COATS TO JOINTS AND SCREW HEADS, PAPER TAPE, 2 IN. WIDE, EMBEDDED IN FIRST LAYER OF COMPOUND OVER ALL JOINTS.
7. **BASE** 6" vinyl

# W2

2 / A1.02 WALL TYPE
1 1/2" = 1'-0"

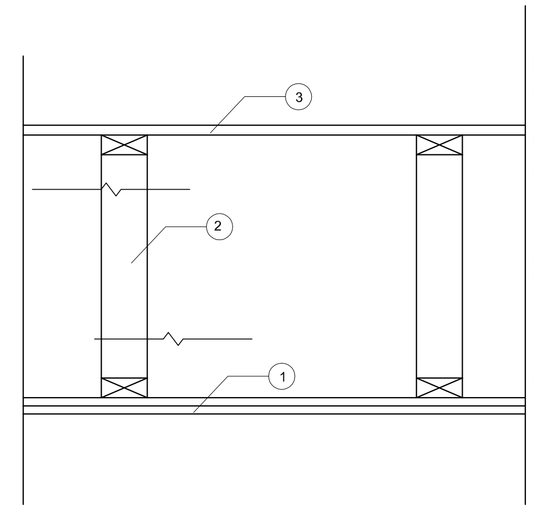


GA File NO. FC 5512 Generic 1 Hour Fire

Gypsum Board, Parallel Chord Wood Trusses

1.
CEILING: Base layer $\frac{5}{8}$" type X gypsum wallboard or gypsum veneer base applied perpendicular to wood trusses 24" o.c. with 1 $\frac{1}{4}$" type S drywall screws 24" o.c. Face layer $\frac{5}{8}$" type X gypsum wallboard or gypsum veneer base applied perpendicular to trusses with 1 $\frac{5}{8}$" Type S drywall screws 12" o.c. and 1 $\frac{5}{8}$" Type G drywall screws 12"o.c. placed 3" back from either side of end joints. Joints offset 24" from base layer joints.

2
TRUSSES: Chord and web members fabricated from 2 x 4 lumber with 20 gage steel connector plates having a minimum tooth length of $\frac{3}{16}$". Plate design values based upon a safety factor of 4. Trusses have a minimum depth of 12".

3
FLOORING: $\frac{3}{4}$" T&G plywood with exterior glue applied at right angles to top of trusses with 6d common nails 6" o.c. Plywood end joints staggered 48".

Approx. Ceiling
Weight: 4 psf
Fire Test: FM FC214- 1 hour, 7-6-78

3 / A1.02 FLOOR TYPE
1 1/2" = 1'-0"

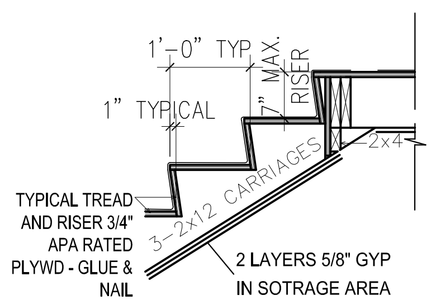


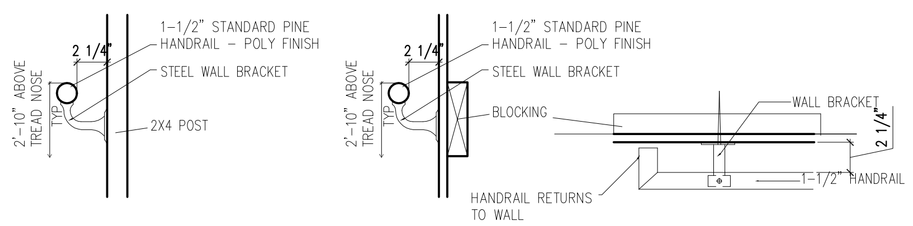


5 / A1.02 HANDRAIL DETAILS
1 1/2" = 1'-0"

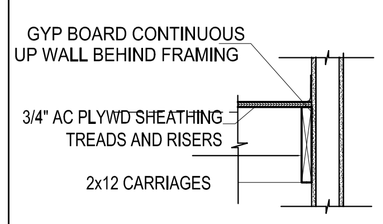


4 / A1.02 STAIR DETAILS
3/4" = 1'-0"

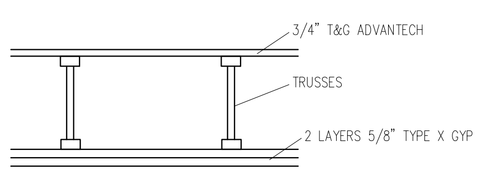


6 / A1.02 F1 - FLOOR/CEILING ASSEMBLY
1 1/2" = 1'-0"

CODE ANALYSIS

CONSTRUCTION TYPE 3B, SPRINKLED

OCCUPANCY TYPE: A2, F1

A2
SQUARE FOOTAGE:
700 S.F./7 = 100 OCCUPANTS
200 S.F. - 10 SEATS IBC 2009 TABLE 1004.1.1

F1
SQUARE FOOTAGE:
1ST FLOOR: 2,184 S.F./300 = 7 OCCUPANTS
MEZZANINE: 550 S.F./100 = 5 OCCUPANTS

TOTAL - 110+7+5 = 122 OCCUPANTS
(61 MEN, 61 WOMEN)

UNIFORM PLUMBING CODE:
MEN - 2 TOILETS, 1 URINAL, 1 LAV
WOMEN - 3 TOILETS, 1 LAV
*AHJ APPROVED TO REDUCE

MEZZANINE -
660 S.F.
STORAGE - 550x.1= 55 S.F. IBC 2009 505.4 EX. 3
OVERLOOKING 2,000 S.F. (2,000 S.F./3=666) IBC 2009 505.2

MEZZ TRAVEL DISTANCES TO NEW EGRESS
PATH <75' IBC 1014.3
SINGLE EGRESS FROM MEZZANINE IBC 505.3
TOTAL TRAVEL DISTANCE
LONGEST OPTION - 75'+111'' = 186''
ALLOWED <250' W/ SPRINKLER IBC TABLE 1016.1

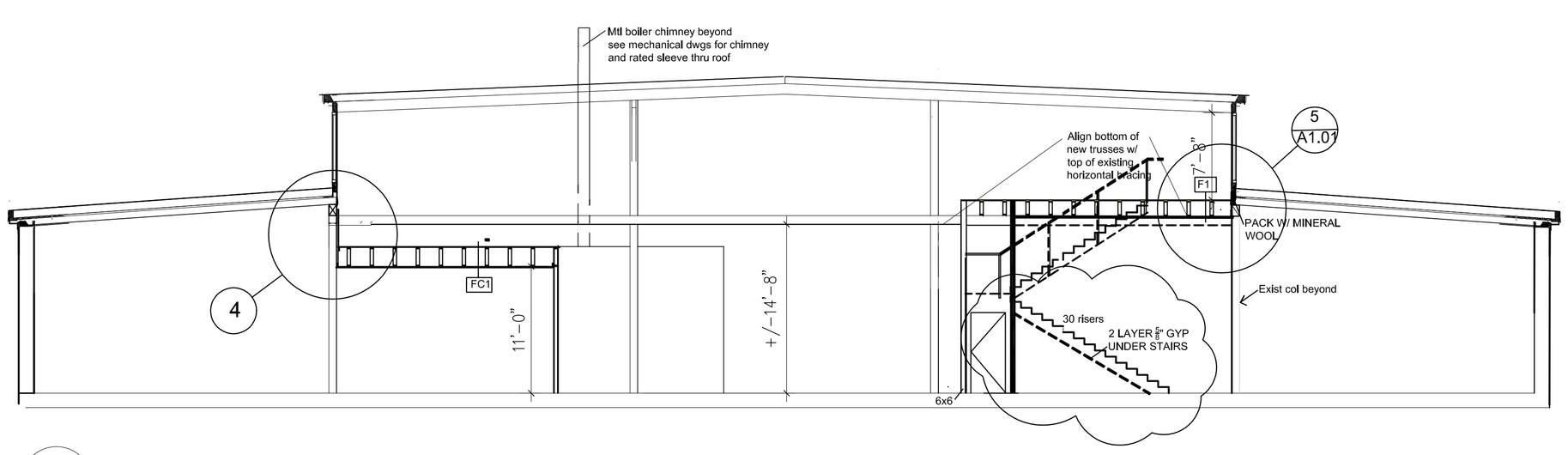


7 / A1.02 SECTION A
1/8" = 1'-0"

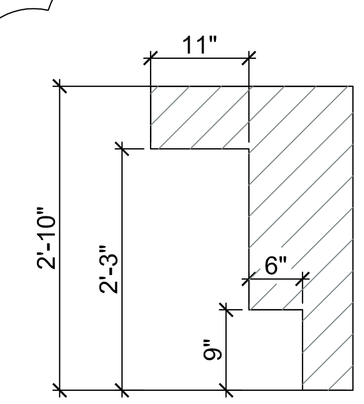


8 / A1.02 ADA BAR COUNTER SECTION
1" = 1'-0"

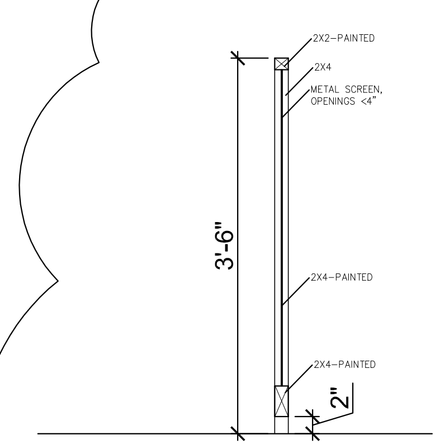


9 / A1.02 GUARDRAIL SECTION
1" = 1'-0"

REGISTERED ARCHITECT WILLIAM KENNETH HOPKINS No. 1030 STATE OF MAINE

Prepared For:

Consultant:


Architect: ARCHETYPE
48 Union Wharf Portland, Maine 04101
(207) 772-6022 Fax (207) 772-4056


Project: BRICK NORTH DISTILLERY
THOMPSON'S POINT, PORTLAND ME

Revisions:
11-20-2015 SUBMITTED FOR PERMIT
2-12-2016 RESPONSE TO BUILDING INSPECTIONS

Scale: AS NOTED

Date: 11-20-2015

WALL & FLOOR TYPES & DETAILS

A1.02