EMPLOYEE AREA : 317 SF
4 OCCUPANTS

18" SHELVING

15'-4 3/4"

KILN

KILN

1'-6"

1'-6"

14'

SKUTT 1227 KILNS

UTILITY TUB

FE

5'-0 1/8"

18" SHELVING

19'-6 1/8"

3'-9 3/8"

5'-6 3/8"

FE

FE

DESIGN CTR

PAINT DISPLAY

COMP

DIAGONAL DISTANCE = 68'-2"
(MIN 22'-9" REMOTE DISTANCE REQUIRED)

40'-6"

5'-5"

REMOTE DISTANCE = 42'-3"

1'-9 1/8"

RECEPTION

DIAGONAL DISTANCE = 52'-9"
(MIN 17' - 7" REMOTE DISTANCE REQUIRED)

28'-4 7/8"

4'-10 3/8"

18'-4"

30x48 TABLE (TYP)

13'-0 3/4"

4'-11 3/8"

9'-10 3/8"

18" SHELVES

FE

EXISTING SPRINKLER SUPPLY

NOTE: SPRINKLERS EXISTING. LAYOUT SHALL BE ALTERED TO ACCOMODATE NEW ROOMS. NEW LAYOUT INVOLVES LESS THAN 20 HEADS SO ADDITIONAL PERMIT NOT REQUIRED. WORK SHALL BE PERFORMED BY RESIDENTIAL FIRE PROTECTION (SAME COMPANY THAT IS INSTALLING MAIN BUILDING SYSTEM AND HOLDS PERMIT FOR THIS WORK.

FE = FIRE EXTINGUISHER & SHALL BE TYPE ABC MOD # 5HI SA 40 ABC & MONITORED BY AAA FIRE.

NOTE: ALL EXTERIOR & TENANT DEMARCATION WALLS ARE EXISTING.
ALL EXTERIOR DOORS & WINDOWS EXISTING

SEATING / DISPLAY / RECEPTION : 1350 SF
48 SEATS + 8 OCCUPANTS DELIVERING & PICKING UP POTTERY PRODUCTS

TOTAL OCCUPANCY: 60

LEGEND

① RIGID SCREENS

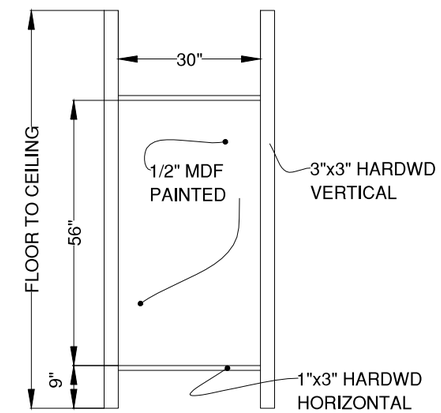

DADO MDF PANEL INTO FRAME.

② 3'-0" X 6'-8" SOLID CORE DOORS (FIRE RATED DRS. w DOOR CLOSERS)

③ BI - FOLD DOORS (20" LEAVES)

④ 48"w x 96"h x 21"d DISPLAY CABINETS (PINE)

⑤ 26"w x 42"h x 18"d CUBBIES (PAINTED)

⑥ 2'-0" x 6'-8" x 1-3/8" SOLID CORE DOOR

Ⓔ EXISTING DOORS

EXIS 8" SQ COLUMNS

NEW 2X4 WALL W 5/8" GWB

EXISTING WALLS

MECH. RM WALL ABOVE

OVERHEAD VENT PIPE

DEKKO LLC	COLOR-ME-MINE	LIFE SAFETY PLAN	DATE: 9/12/14	SCALE: 3/16"=1'-0"	1

AS PER FIELD MEASUREMENTS 11/13/14