BECKER
STRUCTURAL ENGINEERS
75 York Street, Portland, Maine 04101
207.879.1838 ■ beckerstructural.com

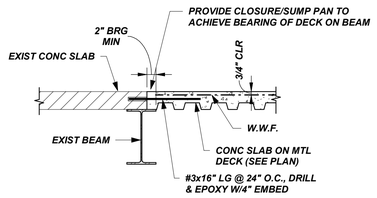

SECTION 1 / S1.2
3/4" = 1'-0"

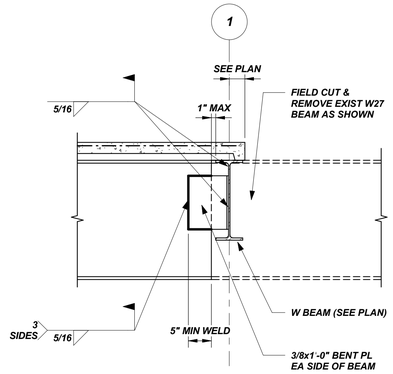

SECTION 2 / S1.2
3/4" = 1'-0"

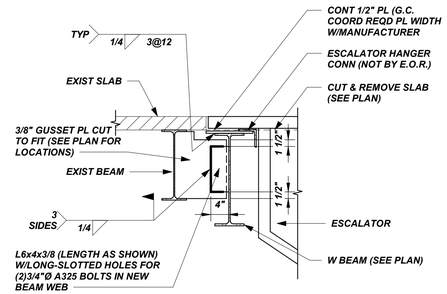

SECTION 3 / S1.2
3/4" = 1'-0"

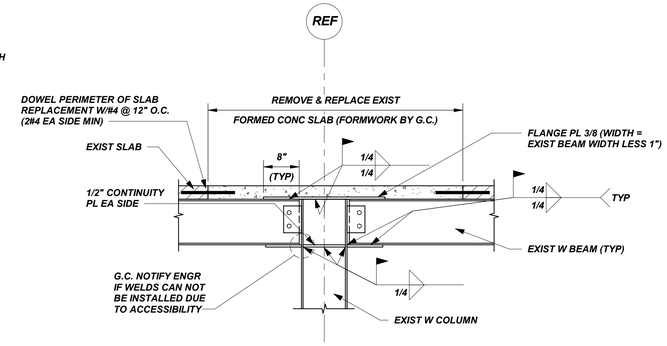

SECTION 4 / S1.2
3/4" = 1'-0"

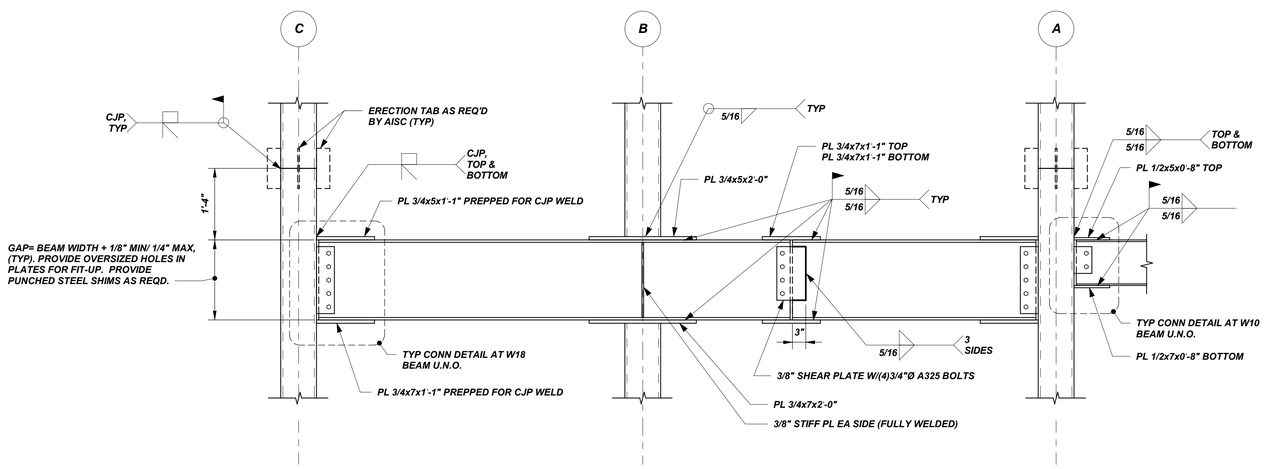

TYP MOMENT CONN DETAILS AT 1-LINE

(SIM AT 2-LINE)

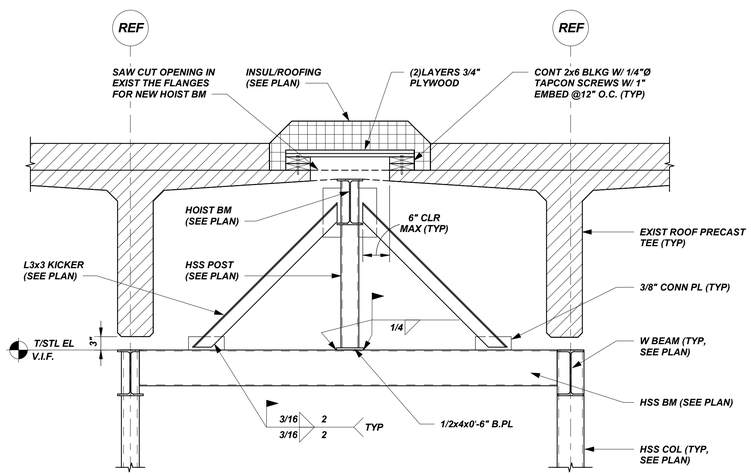

SECTION 5 / S1.3
3/4" = 1'-0"

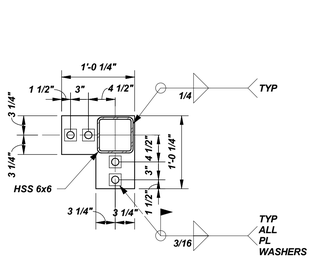

BP-A
PL 3/4x12 1/4x1'-0 1/4" W/(4)-1 5/16"Ø HOLES FOR (4)-3/4"Ø x1'-2" LG GR 36 ANCHOR RODS W/9" EMBED & 5" PROJ.

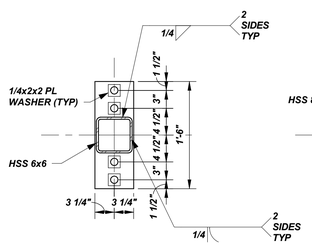

BP-B
PL 3/4x6 1/2x1'-6" W/(4)-1 5/16"Ø HOLES FOR (4)-3/4"Ø x1'-2" LG GR 36 ANCHOR RODS W/9" EMBED & 5" PROJ.

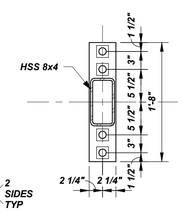

BP-C
PL 3/4x4 1/2x1'-8" W/(4)-1 5/16"Ø HOLES FOR (4)-3/4"Ø x1'-2" LG GR 36 ANCHOR RODS W/9" EMBED & 5" PROJ.

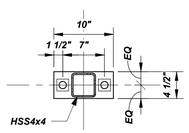

BP-D
PL 1/2x4 1/2x0'-10" W/(2)-1 5/16"Ø HOLES FOR (4)-3/4"Ø x1'-2" LG GR 36 ANCHOR RODS W/9" EMBED & 5" PROJ.

TYP BASE PLATE DETAILS

N.T.S.

STATE OF MAINE
CHRISTOPHER G. WILLIAMS
No. 12854
LICENSED
PROFESSIONAL ENGINEER

ARCHITECTURE
ENGINEERING
PLANNING
INTERIORS
ENERGY
SMRT
144 Fore Street/P.O. Box 618
Portland, Maine 04104
tel. (207) 772-3846
fax. (207) 772-1070
www.smrtinc.com

SMRT PROJECT NO.	PROJECT MGR	JC/DRAWN	A/E OF RECORD
4021		Author	Checker

REV:	BY:	DATE:	STATUS:
0		12-22-17	ISSUED FOR BID

THIS PLAN SHALL NOT BE MODIFIED WITHOUT WRITTEN PERMISSION FROM SEBAGO TECHNICS, INC. ANY ALTERATIONS, UNAUTHORIZED OR OTHERWISE, SHALL BE AT THE USER'S SOLE RISK AND WITHOUT LIABILITY TO SEBAGO TECHNICS, INC.

SEBAGO TECHNICS
WWW.SEBAGOTECHNICS.COM
75 John Roberts Rd. - Suite 1A
South Portland, ME 04106
Tel. (207) 200-2100
250 Goddard Rd. - Suite B
Lewiston, ME 04240
Tel. (207) 795-0905

PROJECT NO.	FIELD BOOK	DESIGN	CHKD	DRAWN
-	-	-	-	-

FRMG SECTIONS AND DETAILS

OF:

PORTLAND INTERNATIONAL JETPORT
VERTICAL CIRCULATION IMPROVEMENTS
1001 WESTBROOK STREET
PORTLAND, MAINE 04102

DATE	SCALE
12/22/17	As indicated

S3.2